USB2GPIO# Adapter Board

Evaluates: USB2GPIO

General Description

The USB2GPIO# adapter board is designed to work with Maxim's Munich GUI and to connect to various EV kit or Pmod boards with Pmod™ compatible connectors for I²C/SPI/GPIO communication to test and evaluate different Maxim ICs. This document explains how the USB2GPIO# adapter board receives commands from a laptop through the USB to create an I²C/SPI/GPIO interface. The Maxim USB2GPIO# board requires the Munich GUI which can be downloaded from Maxim's website free of charge.

The USB2GPIO# design is powered directly from the USB bus power (5V) and integrates two low-power, 1.2A, PWM step-down DC-DC converters (MAX1556) to provide programmable V_{CC} voltages of 1.8V, 2.5V, 3.3V, or 5.0V. A dual, high-speed, USB-to-multipurpose UART/FIFO IC (FT2232HQ), high-speed USB switches (MAX4983), and a 4K MICROWIRE-compatible serial EEPROM are the other ICs on this adapter board.

USB2GPIO# is designed to supersede USB2PMB1# and USB2PMB2# adapters and includes two connectors; connector X3 is a 12-pin connector which supports either I²C with 6 GPIO pins, or SPI with 4 GPIO pins, and is fully compatible with previous adapters and low-pin count EV kit or Pmod boards. This connector is controlled from the Munich GUI. The addition of another connector, X2, which is a 20-pin connector allows either 16 extra GPIO connections or a second SPI port and 12 extra GPIO connections. This 20-pin connector is NOT controlled by Munich GUI but is for use with future EV kits and will be controlled by the relevant EV kit GUIs.

This USB2GPIO# adapter board can be used to enable USB-to-I²C/SPI interface for any Pmod-compatible plug-in peripheral modules such as the Maxim MAX14001PMB#, and MAXREFDES12 – Corona reference designs. In addition, it can be ordered together as an evaluation system (EV system) with different EV kits, such as MAX14001EVKIT#. Note that an "EV system" is an EV kit combined with an interface board, such as a USB2GPIO# and EV kit GUI software. Ordering information for EV systems is included in the EV kits' corresponding data sheet. Refer to the appropriate EV kit data sheet for quick start and detailed operating instructions.

The USB2GPIO# has been tested on Windows® 7, Windows 8, and Windows 10 system using Munich GUI, Version 2.17 or later.

Features

- USB-to-I²C/SPI/GPIO Interface
- Small PCB area
- Pmod-Compatible Form Factor

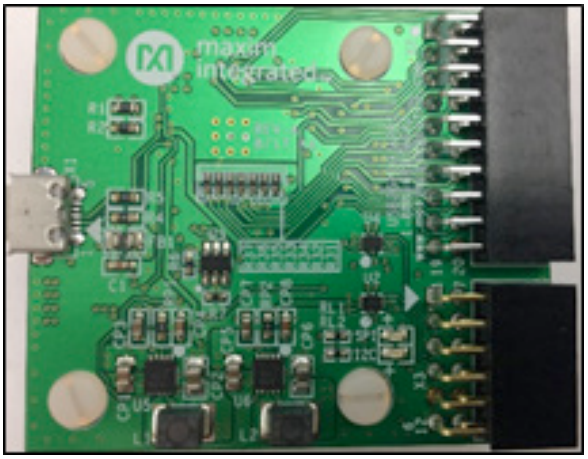

Figure 1. USB2GPIO# Board

Ordering Information ***appears at end of data sheet.***

Windows and Windows XP are registered trademarks and registered service marks of Microsoft Corporation.

Pmod is a trademark of Digilent Inc.

319-100131; Rev 0; 1/18

maxim integrated™

Quick Start

Required Equipment

- PC with Windows OS (Windows 7, Windows 8, or Windows 10) with a USB port
- USB2GPIO# board
- A-to-Micro-B USB cable (not supplied)
- Munich software V2.17 or later
- Supported I²C or SPI interface device for communication like MAX14001PMB# board

Procedure

The USB2GPIO# is fully assembled and tested. Follow the steps below to verify board operation:

1) Go to **www.maximintegrated.com/evkitsoftware** to download the most recent version of the Munich GUI software, **MUNICH GUI**. Save the software to a temporary folder and decompress the **Munich_GUI-SetupV2.17.zip** file.
2) Connect the USB cable between the USB2GPIO# board and the PC; the USB driver is installed automatically.
3) Ensure that the companion SPI interface device's jumper settings are correct. Refer to your companion device's documentation.
4) Connect the USB2GPIO# board's 2 x 6-pin, right-angle connector to the companion device's 2 x 6-pin, right-angle header, as shown in Figure 2.
5) Once the USB2GPIO# board is connected to the companion device, open the **MUNICH GUI.exe** (double-click) software.
6) Start the Munich GUI software and select the tab sheet that corresponds to the companion device. Follow instructions in the companion device data sheet to test it in conjunction with USB2GPIO#.

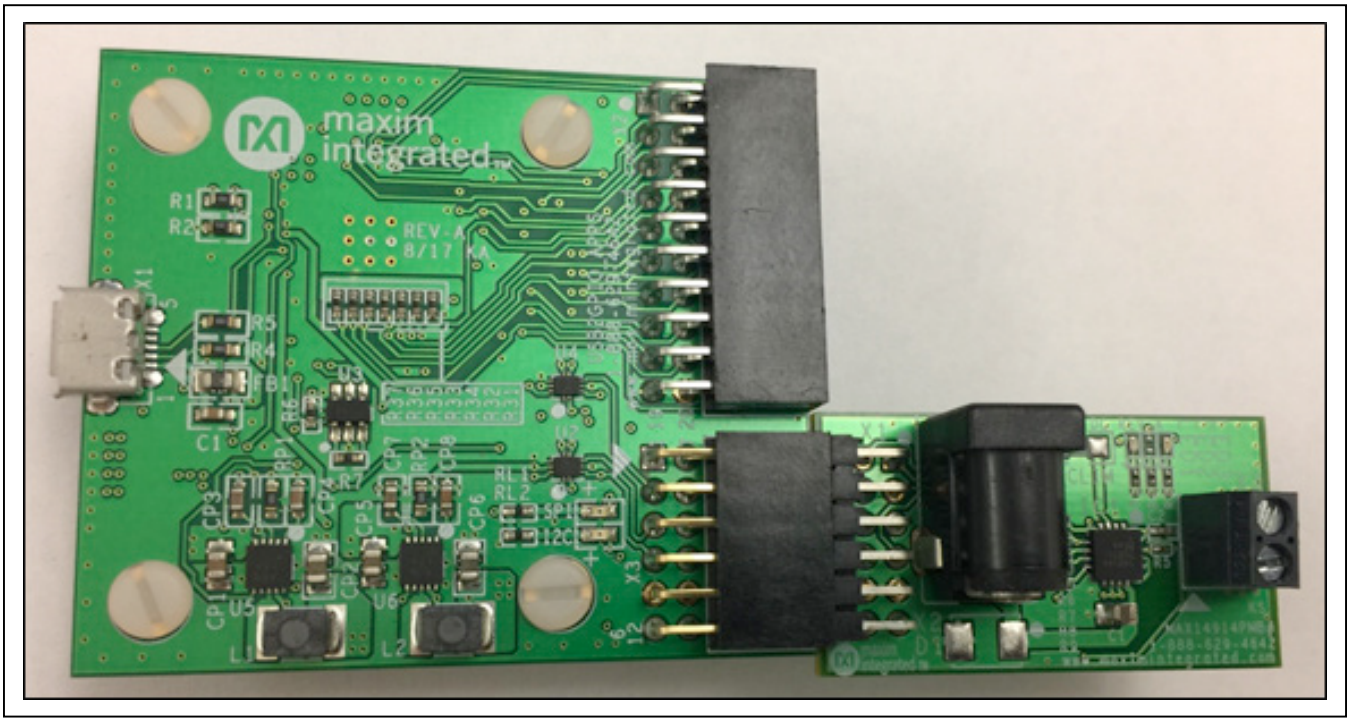

Figure 2. USB2GPIO# Board Connected with MAX14914PMB#

Detailed Description of Hardware

The USB2GPIO# board uses the FT2232HQ (U1), a USB 2.0 high-speed (480Mbps)-to-UART/FIFO IC, to process commands sent by a program running on the PC. Each particular EV kit has its own custom software specific to that kit. The operation of this board is USB-to-dual-channel I2C and SPI engine with additional GPIO channels. The subsystem block diagram and simplified power tree are shown in Figure 3.

The VCCIO and +3.3V voltage supplies are generated by two MAX1556ETBs (U5 and U6), 1.2A, highly efficient PWM step-down DC-DC converters. The 5V supply voltage input for these ICs is provided by the Micro-USB supply terminal available from the laptop. The 3V3 supply provides power to the FDTI chip's VREGIN pin and its internal oscillator through an LC filter, and the 4K MICROWIRE EEPROM (93LC66BT). The USB-to-I2C/SPI engine is powered by 3.3V at the VREGIN pin and the core voltage of 1.8V for the IC is generated at VREGOUT. This VCORE is used within the FTDI IC itself for its internal logic processes and there is an external 12MHz crystal across OSCI and OSCO pins of the FTDI IC. See *USB2GPIO# Adapter Board Schematic* for details.

Pmod and Connector Supply Voltages

The USB2GPIO# is designed to supply power (V_OUT) to external boards through the connectors X2 and X3. This voltage is defined by the type of board connected to X3, and when the user selects that tab in the Munich GUI, V_OUT is automatically set to the correct level, either 1.8V, 2.5V, 3.3V, or 5.0V.

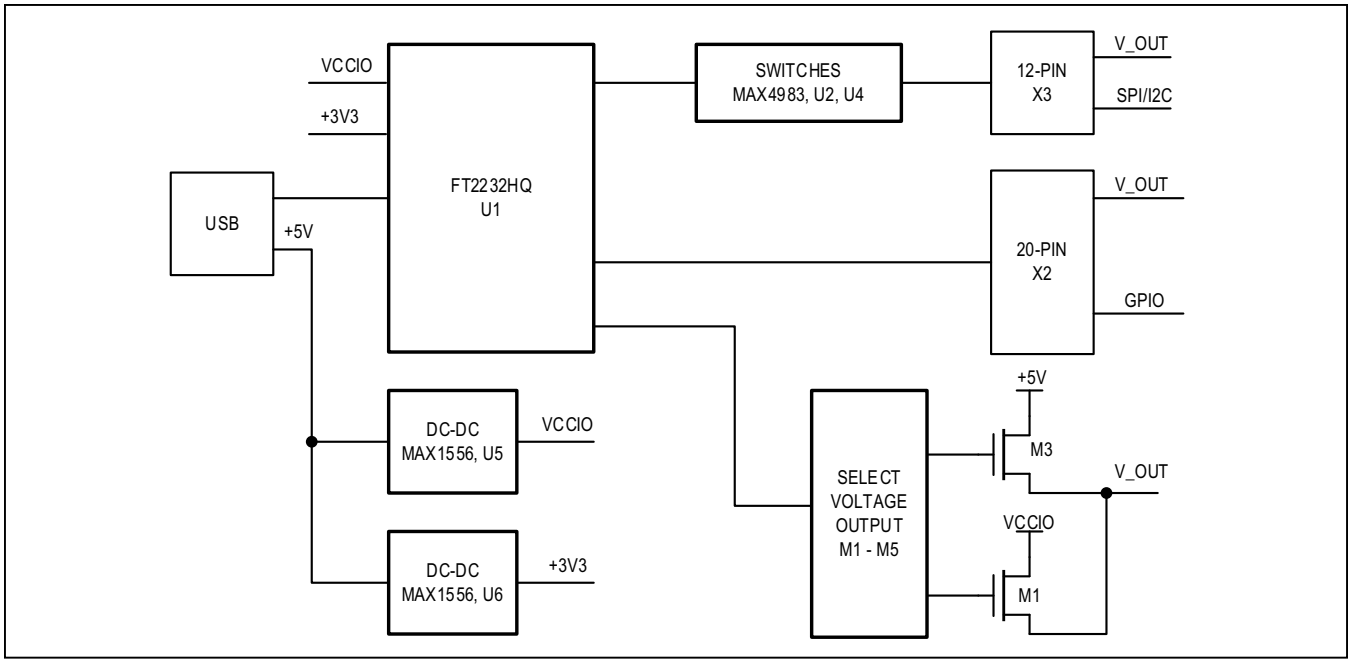

Figure 3. USB2GPIO# Subsystem Block Diagram

Figure 4 shows the pin configuration for the 12-pin SPI/I2C-compatible Pmod connector on the USB2GPIO# board which aligns to the pin configuration for the connector found on companion Pmod boards such as MAX14001PMB#. The connector type is female on the USB2GPIO# board and male type on the companion Pmod boards.

Figure 5 shows the pin configuration for the 20-pin GPIO-compatible connector on the USB2GPIO# board which aligns to the pin configuration for the connector found on companion EV kit boards. The connector type is female on the USB2GPIO# board and male type on the companion EV kit boards. Note that this connector is NOT used by the Munich GUI, but by the appropriate EV kit GUI. The pinout for this connector includes allowing for an extra SPI port should the EV kit require this functionality.

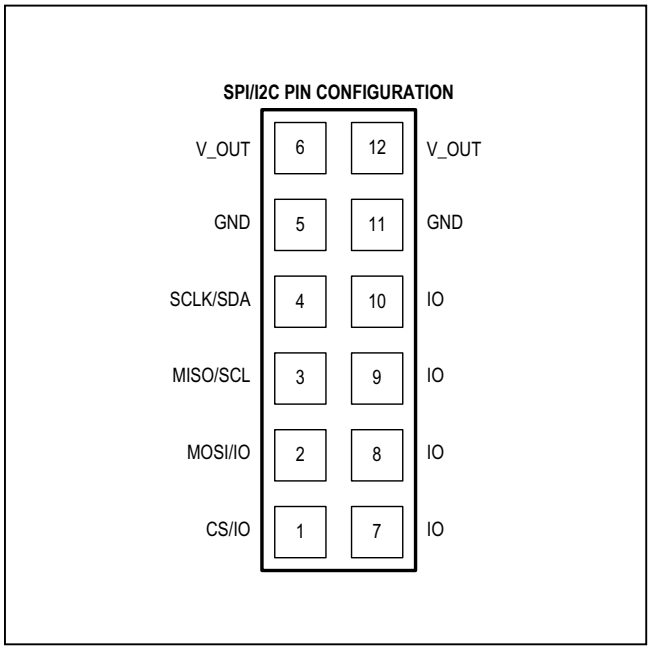

Figure 4. X3: Pmod SPI/I2C Connector Pin Configuration

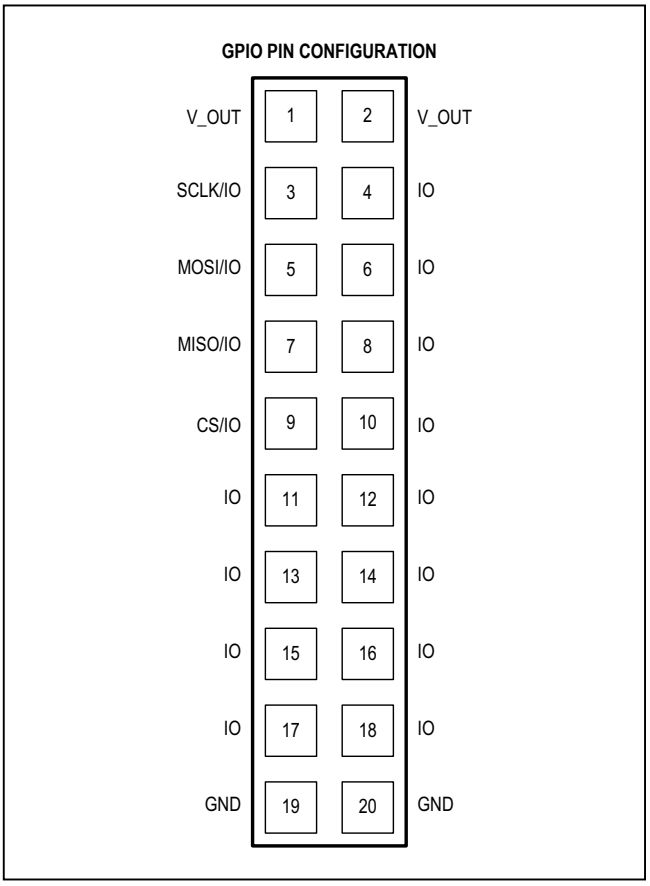

Figure 5. X2: GPIO Connector Pin Configuration

Figure 6 shows the top view of the USB2GPIO# board, with the different connectors and the pin 1 identifiers. Note that there are no jumpers or shunts on this board, all configuration is done under software control. Care should be taken to only insert the boards in the correct way as the connectors are not keyed to avoid false insertions—reversing the connections (by turning the Pmod board upside down, for example) may result in damage to the USB2GPIO# or the companion board. Two LEDs are included to indicate if the X3 Pmod connector is configured as SPI or I^2C.

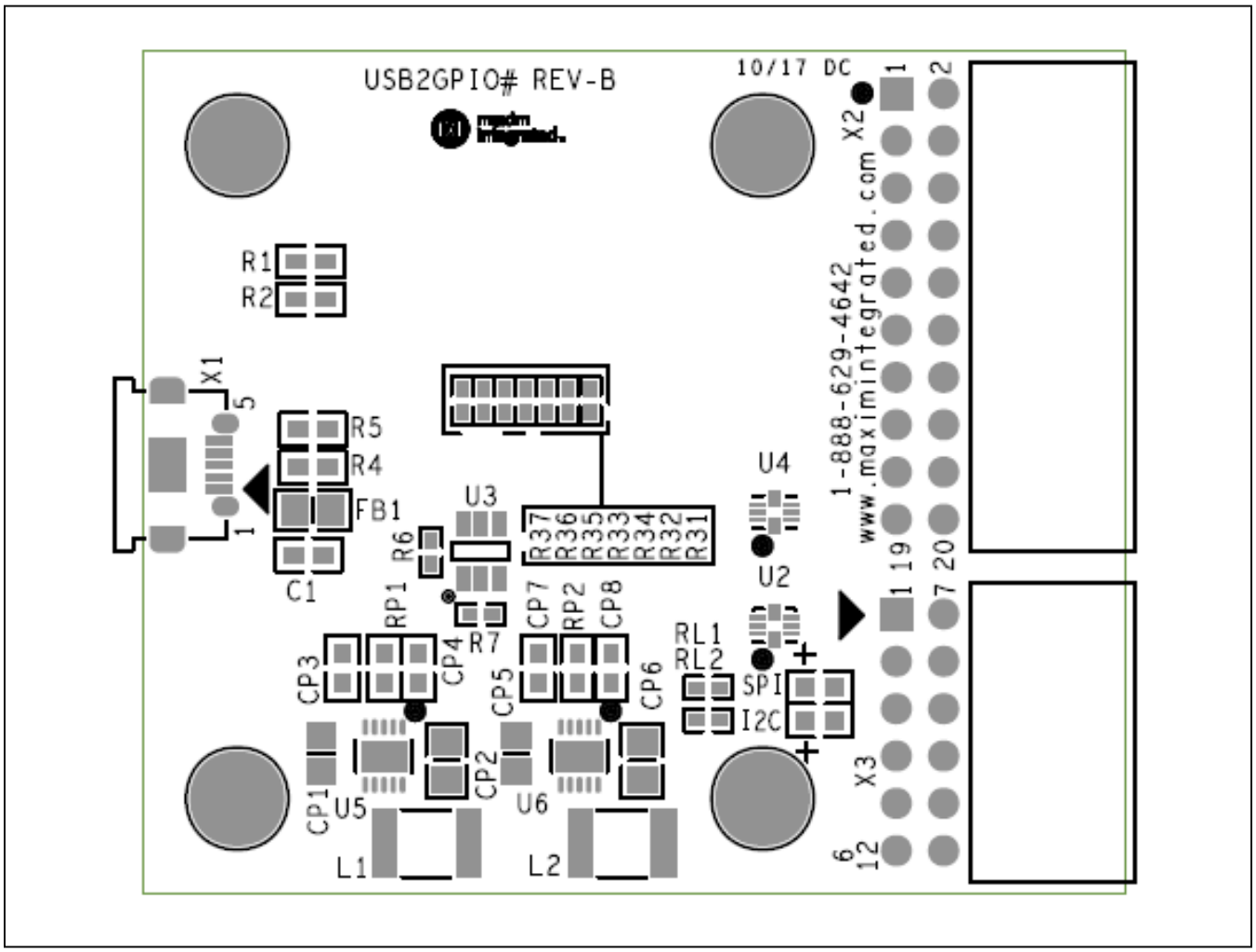

Figure 6. USB2GPIO# Orientation and Pinouts

Ordering Information

PART	TYPE
USB2GPIO#	Adapter Board

#Denotes RoHS compliant.

USB2GPIO# Adapter Board Bill of Materials

ITEM	REF_DES	DNI/DNP	QTY	MFG PART #	MANUFACTURER	VALUE	DESCRIPTION	COMMENTS
1	C1	-	1	C0603C103K5RAC; GRM188R71H103K;C0603X7R500-103KNE	KEMET/MURATA/VENKEL LTD.	0.01UF	CAPACITOR; SMT; 0603; CERAMIC; 0.01uF; 50V; 10%; X7R; -55degC to + 125degC	
2	C2, C12, C14	-	3	GRM21BR71C475KA73	MURATA	4.7UF	CAPACITOR; SMT (0805); CERAMIC CHIP; 4.7UF; 16V; TOL=10%; MODEL=GRM SERIES; TG=-55 DEGC TO +125 DEGC; TC=X7R	
3	C3, C4, C8, C13, C15-C22, CX3B	-	13	C0603C104K5RAC; C1608X7R1H104K	KEMET; TDK	0.1UF	CAPACITOR; SMT (0603); CERAMIC CHIP; 0.1UF; 50V; TOL=10%; TG=-55 DEGC TO +125 DEGC; TC=X7R;	
4	C5, C6	-	2	C0603C330J5GAC; GRM1885C1H330JA01; ECU-V1H330JCV	KEMET/MURATA/PANASONIC	33PF	CAPACITOR; SMT; 0603; CERAMIC; 33pF; 50V; 5%; C0G; -55degC to + 125degC; 0 +/-30PPM/degC	
5	C7, CP1, CP5, CX3A	-	4	CL21A106KOQNNN; GRM21BR61C106KE15; EMK212ABJ106KD	SAMSUNG ELECTRONICS; MURATA; TAIYO YUDEN	10UF	CAPACITOR; SMT (0805); CERAMIC CHIP; 10UF; 16V; TOL=10%; TG=-55 DEGC TO +85 DEGC; TC=X5R	
6	CP2, CP6	-	2	C0805C226M9PAC; GRM21BR60J226ME39; JMK212BJ226MG; CL21A226MQCLQN	GENERIC PART	22UF	CAPACITOR; SMT (0805); CERAMIC CHIP; 22UF; 6.3V; TOL=20%; TG=-55 DEGC TO +125 DEGC; TC=X5R	
7	CP3, CP7	-	2	C0603C102K5RAC; GRM188R71H102KA01; C0603X7R500-102KNE	KEMET/MURATA/VENKEL	1000PF	CAPACITOR; SMT; 0603; CERAMIC; 1000pF; 50V; 10%; X7R; -55degC to + 125degC; +/-15% from -55degC to +125degC	
8	CP4, CP8	-	2	C0603C105K3PAC; GRM188R61E105KA12; 06033D105KAT2A	KEMET; MURATA; AVX	1UF	CAPACITOR; SMT (0603); CERAMIC CHIP; 1UF; 25V; TOL=10%; TG=-55 DEGC TO +85 DEGC;	
9	FB1-FB3	-	3	BLM21PG331SN1	MURATA	330	INDUCTOR; SMT (0805); FERRITE-BEAD; 330; TOL=+/-25%; 1.5A	
10	I2C, SPI	-	2	150060VS75000	WURTH ELECTRONICS INC	150060VS75000	DIODE; LED; WL-SMCW SMD CHIP LED TOP VIEW MONO-COLOR WATER CLEAR; GREEN; SMT (0603); VF=2V; IF=0.02A	
11	L1, L2	-	2	B82432T1332K	TDK	3.3UH	INDUCTOR; SMT (1812); FERRITE CORE; 3.3UH; TOL=+/-10%; 0.9A	
12	M1, M3	-	2	NTTFS5116PL	ON SEMICONDUCTOR	NTTFS5116PL	TRAN; POWER MOSFET; PCH; WDFN8; PD-(40W); I-(-20A); V-(-60V)	
13	M2	-	1	SI2319DS-T1-E3	VISHAY SILICONIX	SI2319DS-T1-E3	TRAN; P-CHANNEL D-S MOSFET; PCH; SOT-23; PD-(0.75W); I-(-2.3A); V-(-40V)	
14	M4, M5	-	2	IRLML6346	INTERNATIONAL RECTIFIER	IRLML6346	TRAN; HEXFET POWER MOSFET; NCH; SOT-23; PD-(1.3W); I-(0.00025A); V-(30V)	
15	MT1-MT4	-	4	P440.375	GENERIC PART	N/A	MACHINE SCREW; SLOTTED; PAN; 4-40IN; 3/8IN; NYLON	
16	MT1-MT4	-	4	1902B	GENERIC PART	N/A	STANDOFF; FEMALE-THREADED; HEX; 4-40IN; 3/8IN; NYLON	
17	Q1	-	1	ECS-120-20-33	ECS INC	12MHZ	CRYSTAL; SMT; 20PF; 12MHZ; +/-50PPM; +/-50PPM	

USB2GPIO# Adapter Board Bill of Materials (continued)

ITEM	REF_DES	DNI/DNP	QTY	MFG PART #	MANUFACTURER	VALUE	DESCRIPTION	COMMENTS
18	Q2, Q3	-	2	PMGD280UN	NXP	PMGD280UN	TRAN; DUAL N-CHANNEL UTRENCHMOS ULTRA LOW LEVEL FET; NCH; SOT-363; PD-(0.4W); I-(0.87A); V-(20V)	
19	R1, R9-R11, R16, R17, RP3, RP4	-	8	CRCW060310K0FK; ERJ-3EKF1002	VISHAY DALE; PANASONIC	10K	RESISTOR; 0603; 10K; 1%; 100PPM; 0.10W; THICK FILM	
20	R2	-	1	CRCW060315K0FK	VISHAY DALE	15K	RESISTOR, 0603, 15K OHM,1%, 100PPM, 0.10W, THICK FILM	
21	R3	-	1	CRCW060312K1FK	VISHAY DALE	12.1K	RESISTOR; 0603; 12.1K OHM; 1%; 100PPM; 0.1W; THICK FILM	
22	R4, R5	-	2	CRCW060310R0FK; MCR03EZPFX10R0	VISHAY DALE/ROHM	10	RESISTOR; 0603; 10 OHM; 1%; 100PPM; 0.10W; THICK FILM	
23	R6, R12-R15, R18-R37, RAD9, RAD10	-	27	CRCW040210K0FK; RC0402FR-0710K	VISHAY DALE; YAGEO PHICOMP	10K	RESISTOR; 0402; 10K; 1%; 100PPM; 0.0625W; THICK FILM	
24	R7	-	1	CRCW04022K20FK; RC0402FR-072K2L	VISHAY DALE/YAGEO PHICOMP	2.2K	RESISTOR, 0402, 2.2K OHM, 1%, 100PPM, 0.0625W, THICK FILM	
25	RL1, RL2	-	2	ERJ-2GEJ471X	PANASONIC	470	RESISTOR; 0402; 470 OHM; 5%; 200PPM; 0.10W; THICK FILM	
26	RP1, RP2	-	2	CRCW0603100RFK; ERJ-3EKF1000	VISHAY DALE/PANASONIC	100	RESISTOR; 0603; 100 OHM; 1%; 100PPM; 0.10W; THICK FILM	
27	U1	-	1	FT2232HQ	FUTURE TECHNOLOGY DEVICES INTL LTD.	FT2232HQ	IC; MMRY; DUAL HIGH SPEED USB TO MULTIPURPOSE UART/FIFO; QFN64-EP	
28	U2, U4	-	2	MAX4983EEVB+	MAXIM	MAX4983EEVB+	IC; ASW; HI-SPEED USB 2.0 SWITCH WITH +/- 15KV ESD; UTQFN10	
29	U3	-	1	93LC66BT-I/OT	MICROCHIP	93LC66BT-I/OT	IC; EPROM; 4K MICROWIRE SERIAL EEPROM; SOT23-6	
30	U5, U6	-	2	MAX1556ETB+	MAXIM	MAX1556ETB+	IC; CONV; PWM STEP-DOWN DC-DC CONVERTER; TDFN10-EP 3X3	
31	X1	-	1	ZX62RD-AB-5P8	HIROSE ELECTRIC CO LTD.	ZX62RD-AB-5P8	CONNECTOR; MALE; SMT; MICRO-USB CONNECTOR MEETING REQUIREMENTS OF USB 2.0 STANDARD; RIGHT ANGLE; 5PINS	
32	X2	-	1	PPTC102LJBN-RC	SULLINS ELECTRONICS CORP	PPTC102LJBN-RC	CONNECTOR; FEMALE; THROUGH HOLE; BREAKAWAY HEADER; RIGHT ANGLE; 20PINS	
33	X3	-	1	PPPC062LJBN-RC	SULLINS ELECTRONICS CORP.	PPPC062LJBN-RC	CONNECTOR; FEMALE; THROUGH HOLE; 0.1IN CC; HEADER; 2 ROW; RIGHT ANGLE; 12PINS	
34	PCB	-	1	USB2GPIO_APPS_B	MAXIM	PCB	PCB:USB2GPIO_APPS_B	-
TOTAL			106					

USB2GPIO# Adapter Board Schematic

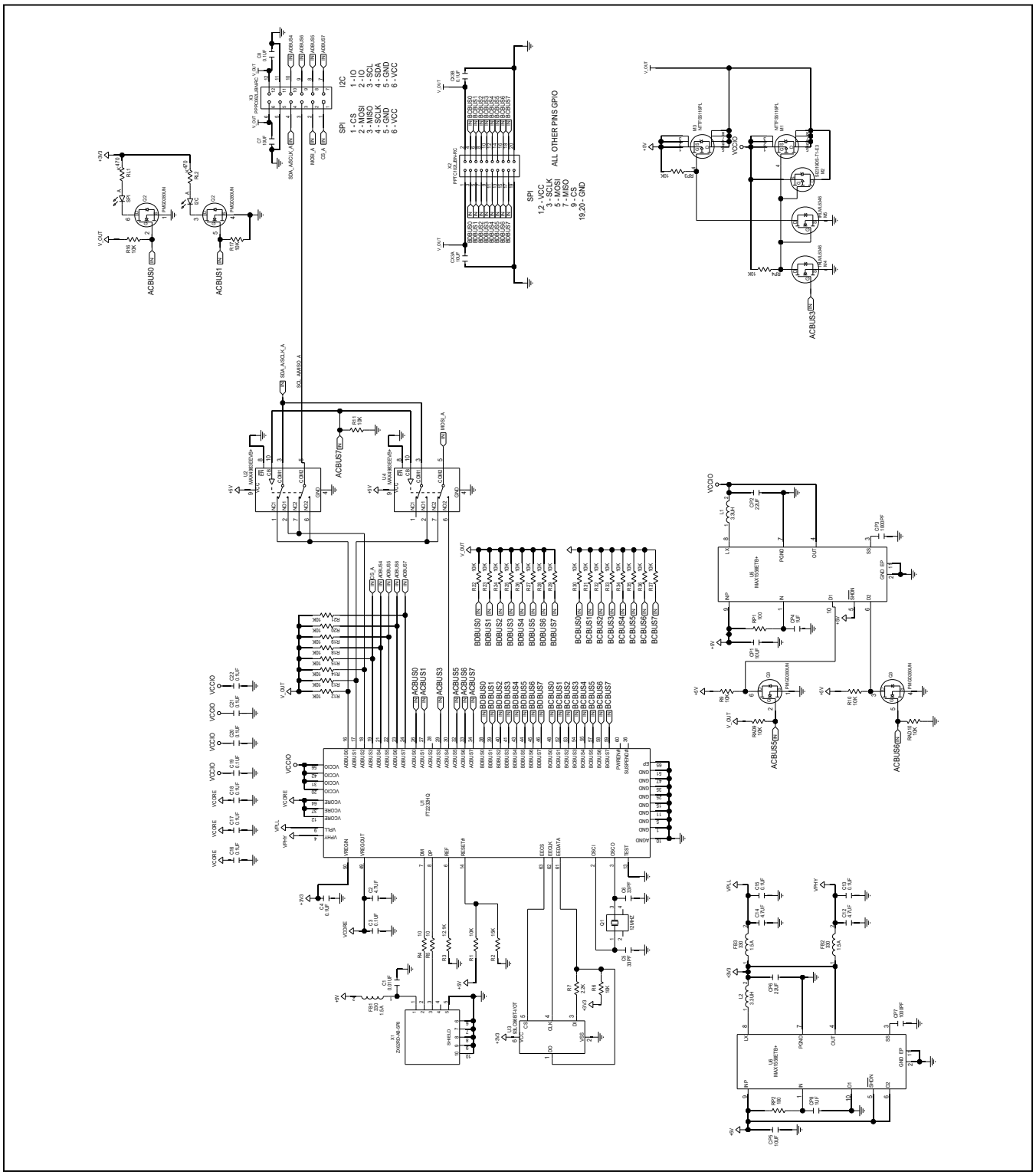

USB2GPIO# Adapter Board PCB Layout Diagrams

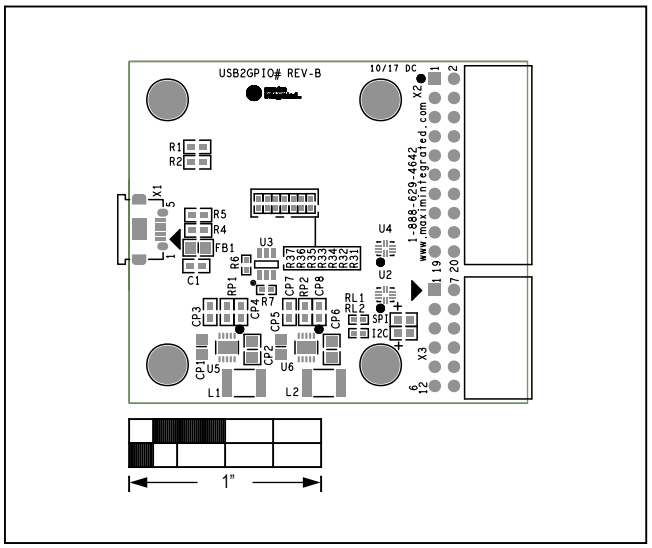

USB2GPIO# Adapter Board—Top Silkscreen

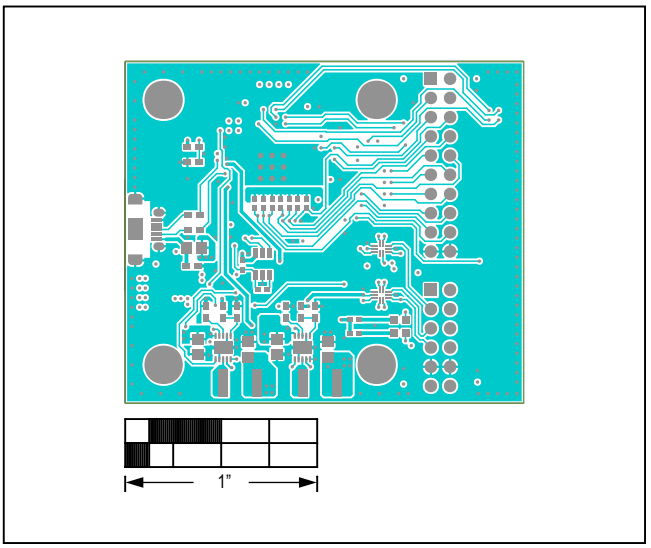

USB2GPIO# Adapter Board—Top

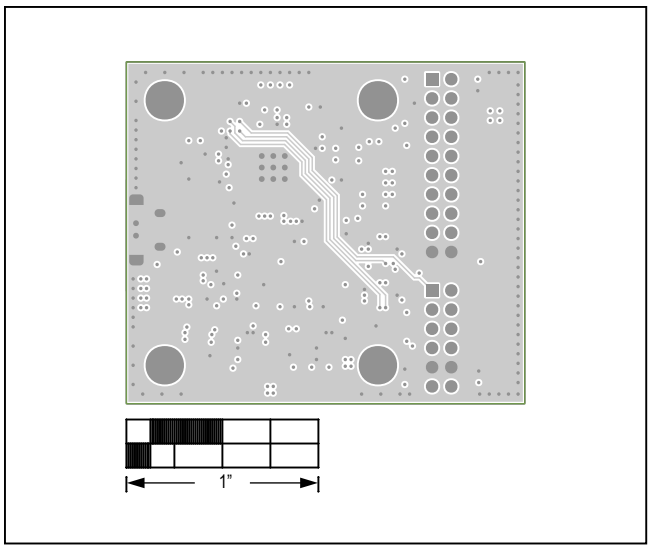

USB2GPIO# Adapter Board—Internal 2

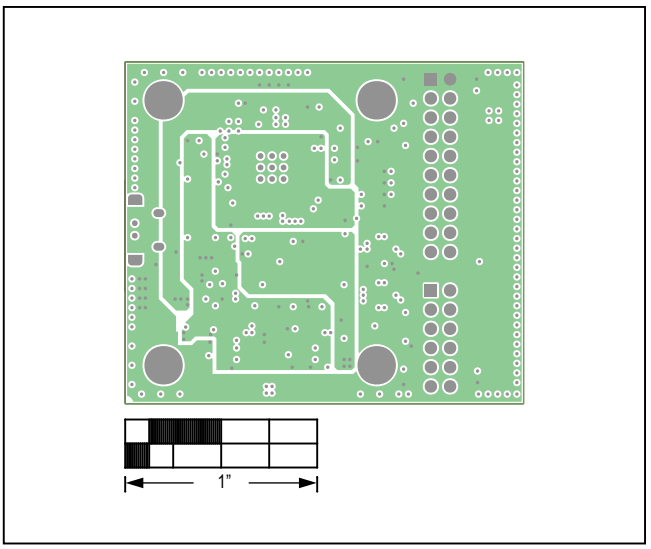

USB2GPIO# Adapter Board—Internal 3

USB2GPIO# Adapter Board PCB Layout Diagrams (continued)

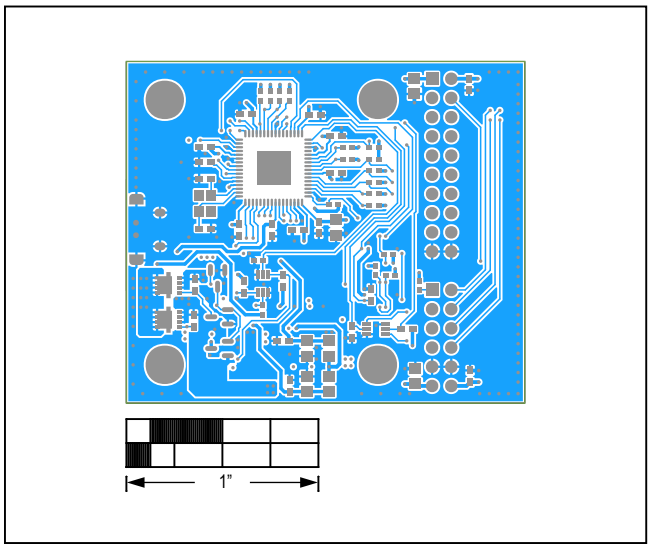

USB2GPIO# Adapter Board—Bottom

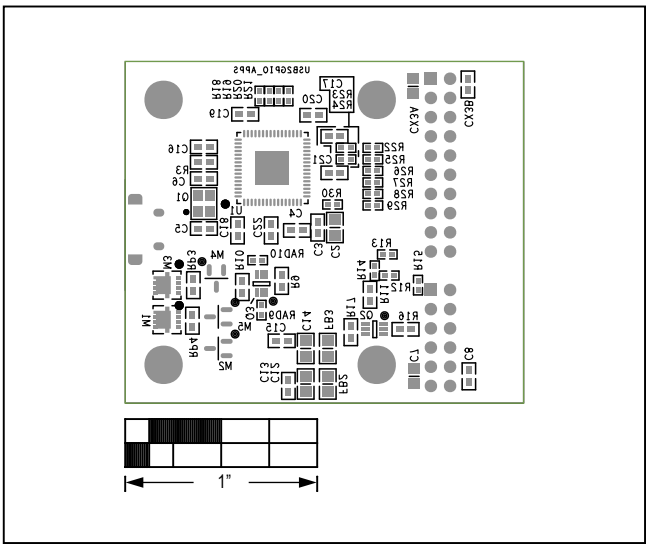

USB2GPIO# Adapter Board—Bottom Silkscreen

Revision History

REVISION NUMBER	REVISION DATE	DESCRIPTION	PAGES CHANGED
0	12/17	Initial release	—

For pricing, delivery, and ordering information, please contact Maxim Direct at 1-888-629-4642, or visit Maxim Integrated's website at www.maximintegrated.com.

Maxim Integrated cannot assume responsibility for use of any circuitry other than circuitry entirely embodied in a Maxim Integrated product. No circuit patent licenses are implied. Maxim Integrated reserves the right to change the circuitry and specifications without notice at any time.

Maxim Integrated and the Maxim Integrated logo are trademarks of Maxim Integrated Products, Inc. © 2017 Maxim Integrated Products, Inc.