USB2514

USB 2.0 High-Speed 4-Port Hub Controller

PRODUCT FEATURES

Datasheet

General Description

The SMSC 4-Port Hub is low power, OEM configurable, MTT (multi transaction translator) hub controller IC with 4 downstream ports for embedded USB solutions. The 4-port hub is fully compliant with the USB 2.0 Specification and will attach to an upstream port as a Full-Speed Hub or as a Full-/High-Speed Hub. The 4-Port Hub supports Low-Speed, Full- Speed, and High-Speed (if operating as a High-Speed Hub) downstream devices on all of the enabled downstream ports.

General Features

- Hub Controller IC with 4 downstream ports
- High-performance multiple transaction translator. MultiTRAK™ Technology Provides one transaction translator per port
- Enhanced OEM configuration options available through either a single serial i2C EEPROM, or SMBus Slave Port
- 36-pin (6x6mm) and 48-Pin (7x7mm) QFN lead-free, RoHS compliant packages
- Footprint compatible with USB2513 and USB2512 (36-pin QFN) to provide designers with flexibility regarding the quantity of USB expansion ports utilized without redesign

Hardware Features

- Low power operation
- Full Power Management with individual or ganged power control of each downstream port
- On-chip Power On Reset (POR)
- Internal 1.8V Voltage Regulator
- Fully integrated USB termination and Pull-up/Pull-down resistors
- On Board 24MHz Crystal Driver or External 24/48MHz clock input
- USB host/device speed indicator. Per-port 3-color LED drivers that indicate the speed of USB host and device connection - hi-speed (480 Mbps), full-speed (12 Mbps), low-speed (1.5 Mbps) (48-pin QFN)
- Enhanced EMI rejection and ESD protection performance

OEM Selectable Features

- Customize Vendor ID, Product ID, and Device ID
- Select whether the hub is part of a compound device (When any downstream port is permanently hardwired to a USB peripheral device, the hub is part of a compound device)
- Flexible port mapping and disable sequence. Ports can be disabled/reordered in any order to support multiple product SKUs. Hub will automatically reorder the remaining ports to match the Host controller's numbering scheme
- Programmable USB differential-pair pin location
- Ease PCB layout by aligning USB signal lines directly to connectors
- Programmable USB signal drive strength. Recover USB signal integrity due to compromised system environment using 4-level driving strength resolution
- Select the presence of a permanently hardwired USB peripheral device on a port by port basis
- Configure the delay time for filtering the over-current sense inputs
- Configure the delay time for turning on downstream port power
- Configure the polarity of downstream port power control signals
- Indicate the maximum current that the 4-port hub consumes from the USB upstream port
- Indicate the maximum current required for the hub controller
- Supports Custom String Descriptor up to 31 characters in length for:
  - Product String
  - Manufacturer String
  - Serial Number String
- Pin Selectable Options for Default Configuration
  - Select Downstream Ports as Non-Removable Ports
  - Select Downstream Ports as Disabled Ports
  - Select Downstream Port Power Control and Over-Current Detection on a Ganged or Individual Basis
  - Select Downstream Port Power Control Polarity
  - Select USB Signal Drive Strength
  - Select USB Differential Pair Pin location
  - Select on-chip or off-chip voltage regulator mode

Applications

- LCD monitors and TVs
- Multi-function USB peripherals
- PC mother boards
- Set-top boxes, DVD players, DVR/PVR
- Printers and scanners
- PC media drive bay
- Portable hub boxes
- Mobile PC docking
- Embedded systems

ORDER NUMBERS:

USB2514-AEZG FOR 36 PIN, QFN LEAD-FREE ROHS COMPLIANT PACKAGE

USB2514-HZH FOR 48 PIN, QFN LEAD-FREE ROHS COMPLIANT PACKAGE

80 ARKAY DRIVE, HAUPPAUGE, NY 11788 (631) 435-6000, FAX (631) 273-3123

Copyright © 2007 SMSC or its subsidiaries. All rights reserved.

Circuit diagrams and other information relating to SMSC products are included as a means of illustrating typical applications. Consequently, complete information sufficient for construction purposes is not necessarily given. Although the information has been checked and is believed to be accurate, no responsibility is assumed for inaccuracies. SMSC reserves the right to make changes to specifications and product descriptions at any time without notice. Contact your local SMSC sales office to obtain the latest specifications before placing your product order. The provision of this information does not convey to the purchaser of the described semiconductor devices any licenses under any patent rights or other intellectual property rights of SMSC or others. All sales are expressly conditional on your agreement to the terms and conditions of the most recently dated version of SMSC's standard Terms of Sale Agreement dated before the date of your order (the "Terms of Sale Agreement"). The product may contain design defects or errors known as anomalies which may cause the product's functions to deviate from published specifications. Anomaly sheets are available upon request. SMSC products are not designed, intended, authorized or warranted for use in any life support or other application where product failure could cause or contribute to personal injury or severe property damage. Any and all such uses without prior written approval of an Officer of SMSC and further testing and/or modification will be fully at the risk of the customer. Copies of this document or other SMSC literature, as well as the Terms of Sale Agreement, may be obtained by visiting SMSC's website at http://www.smsc.com. SMSC is a registered trademark of Standard Microsystems Corporation ("SMSC"). Product names and company names are the trademarks of their respective holders.

SMSC DISCLAIMS AND EXCLUDES ANY AND ALL WARRANTIES, INCLUDING WITHOUT LIMITATION ANY AND ALL IMPLIED WARRANTIES OF MERCHANTABILITY, FITNESS FOR A PARTICULAR PURPOSE, TITLE, AND AGAINST INFRINGEMENT AND THE LIKE, AND ANY AND ALL WARRANTIES ARISING FROM ANY COURSE OF DEALING OR USAGE OF TRADE. IN NO EVENT SHALL SMSC BE LIABLE FOR ANY DIRECT, INCIDENTAL, INDIRECT, SPECIAL, PUNITIVE, OR CONSEQUENTIAL DAMAGES; OR FOR LOST DATA, PROFITS, SAVINGS OR REVENUES OF ANY KIND; REGARDLESS OF THE FORM OF ACTION, WHETHER BASED ON CONTRACT; TORT; NEGLIGENCE OF SMSC OR OTHERS; STRICT LIABILITY; BREACH OF WARRANTY; OR OTHERWISE; WHETHER OR NOT ANY REMEDY OF BUYER IS HELD TO HAVE FAILED OF ITS ESSENTIAL PURPOSE, AND WHETHER OR NOT SMSC HAS BEEN ADVISED OF THE POSSIBILITY OF SUCH DAMAGES.

Table of Contents

Chapter 1 Pin Configuration 6

Chapter 2 Block Diagram 8

Chapter 3 Pin Descriptions 9
3.1 PIN Descriptions 9
3.2 Buffer Type Descriptions 16

Chapter 4 Configuration Options. 18
4.1 4-Port Hub 18
4.1.1 Hub Configuration Options 18
4.1.2 VBus Detect. 18
4.2 36 QFN and 48 QFN Feature Differences 18
4.3 EEPROM Interface 19
4.3.1 Internal Register Set (Common to EEPROM and SMBus) 19
4.3.2 I2C EEPROM 31
4.3.3 In-Circuit EEPROM Programming 32
4.4 SMBus Slave Interface 32
4.4.1 Bus Protocols 32
4.4.2 Invalid Protocol Response Behavior 33
4.4.3 General Call Address Response 33
4.4.4 Slave Device Time-Out 34
4.4.5 Stretching the SCLK Signal 34
4.4.6 SMBus Timing 34
4.4.7 Bus Reset Sequence. 34
4.4.8 SMBus Alert Response Address 34
4.5 Default Configuration Option: 34
4.6 Default Strapping Options: 34
4.7 Reset 35
4.7.1 Internal POR Hardware Reset. 35
4.7.2 External Hardware RESET_N 35
4.7.3 USB Bus Reset 38

Chapter 5 DC Parameters. 40
5.1 Maximum Guaranteed Ratings 40
5.2 Recommended Operating Conditions. 40

Chapter 6 AC Specifications 44
6.1 Oscillator/Clock. 44
6.1.1 SMBus Interface: 44
6.1.2 I2C EEPROM: 44
6.1.3 USB 2.0 44

Chapter 7 Package Outlines 45

List of Figures

Figure 1.1 USB2514 36-Pin QFN 6
Figure 1.2 USB2514 48-Pin QFN 7
Figure 2.1 USB2514 Block Diagram 8
Figure 4.1 Block Write 33
Figure 4.2 Block Read 33
Figure 4.3 LED Strapping Option 35
Figure 4.4 Reset_N Timing for Default/Strap Option Mode 36
Figure 4.5 Reset_N Timing for EEPROM Mode 37
Figure 4.6 Reset_N Timing for SMBus Mode 38
Figure 7.1 36-Pin QFN, 6x6mm Body, 0.5mm Pitch 45
Figure 7.2 48-Pin QFN, 7x7mm Body, 0.5mm Pitch 46

List of Tables

Table 3.1 USB2514 Pin Descriptions 9
Table 3.2 SMBus or EEPROM Interface Behavior 15
Table 3.3 USB2514 Power, Ground, No Connect 16
Table 3.4 USB2514 Buffer Type Descriptions 16
Table 4.1 36 QFN and 48 QFN Feature Differences 18
Table 4.2 Internal EEPROM and SMBus Register Memory Map 19
Table 4.3 Reset_N Timing for Default/Strap Option Mode 36
Table 4.4 Reset_N Timing for EEPROM Mode 37
Table 4.5 Reset_N Timing for SMBus Mode 38
Table 5.1 DC Electrical Characteristics 41
Table 5.2 Pin Capacitance. 43

Chapter 1 Pin Configuration

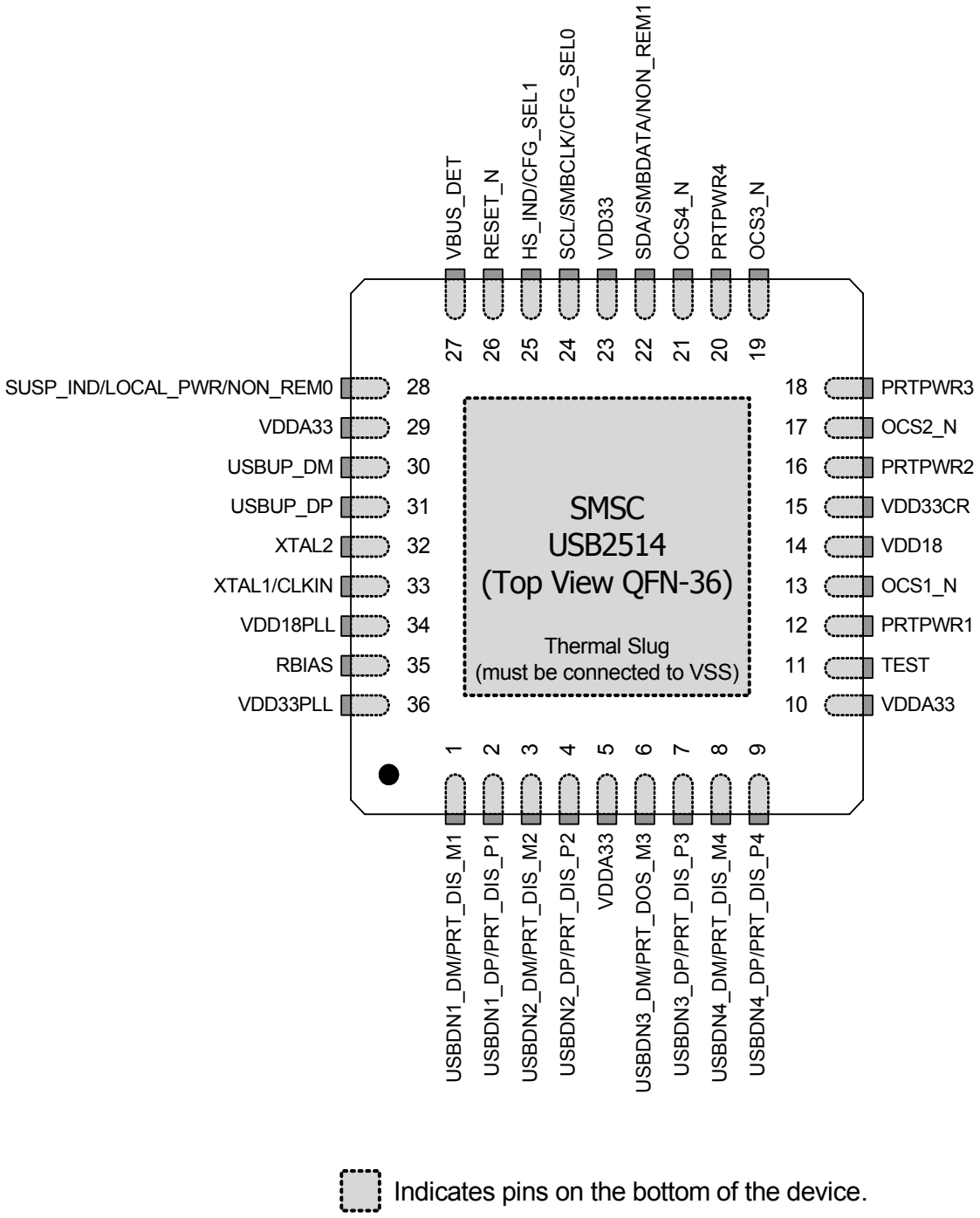

Figure 1.1 USB2514 36-Pin QFN

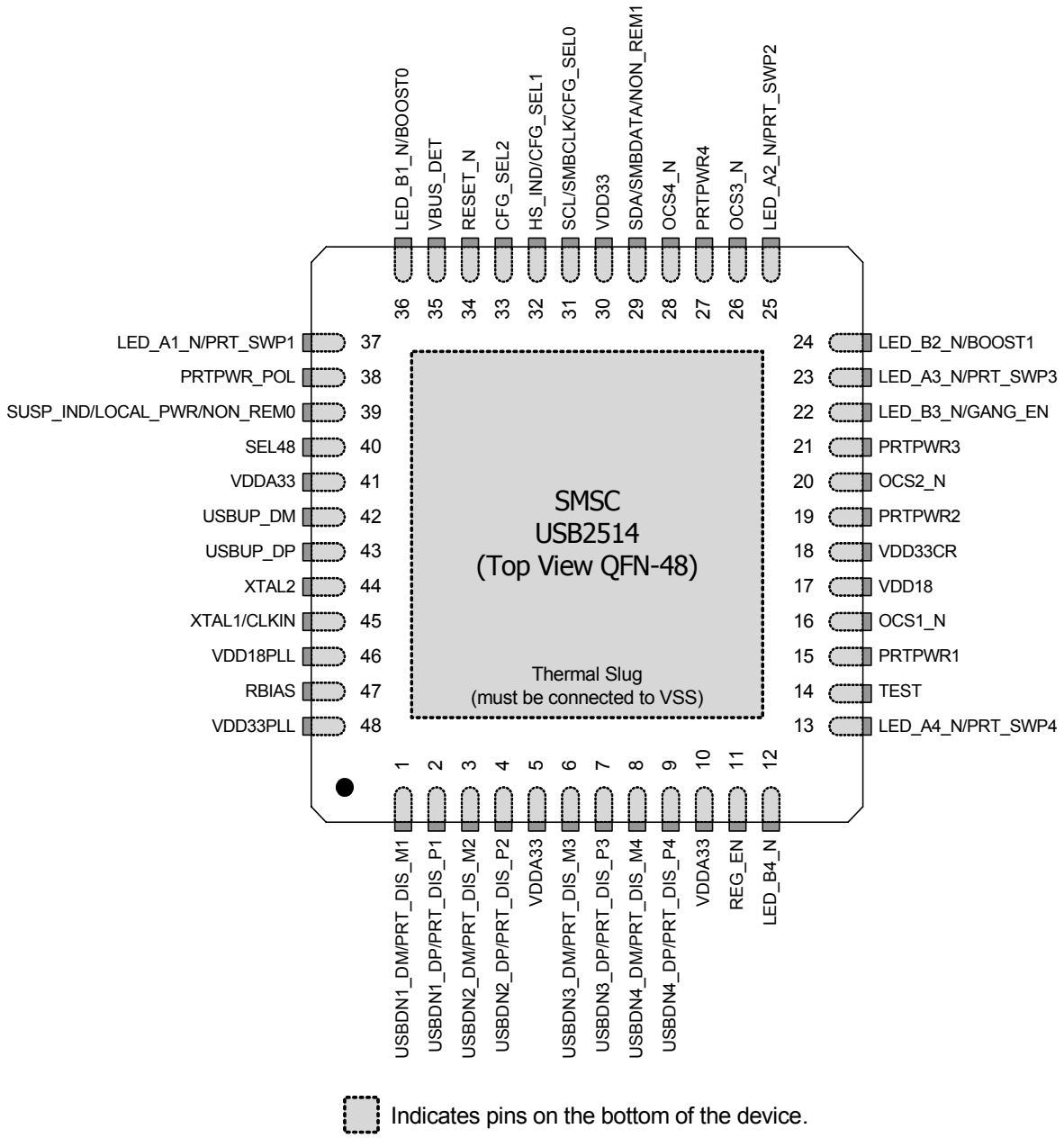

Figure 1.2 USB2514 48-Pin QFN

Chapter 2 Block Diagram

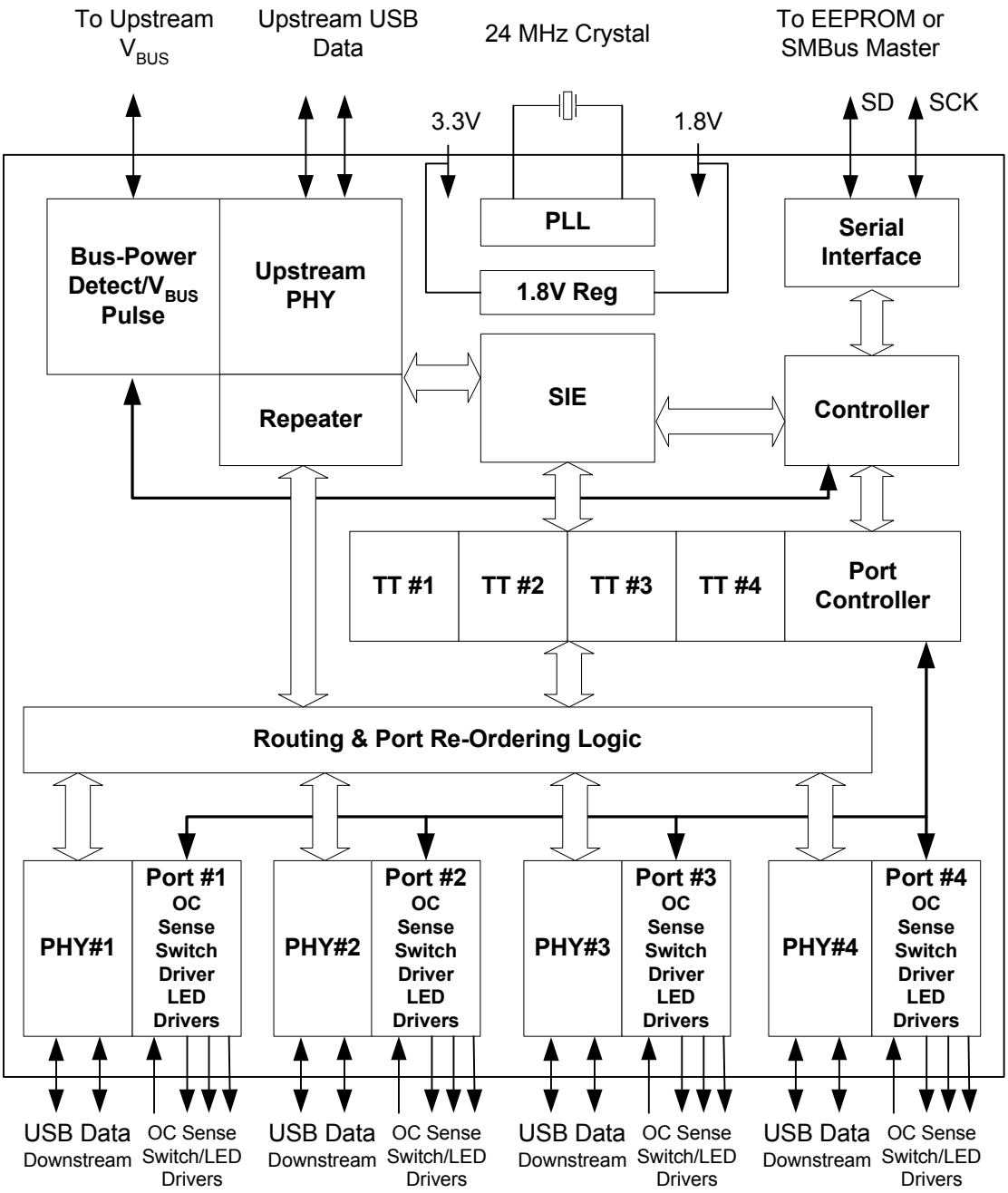

Figure 2.1 USB2514 Block Diagram

Chapter 3 Pin Descriptions

3.1 PIN Descriptions

This section provides a detailed description of each signal. The signals are arranged in functional groups according to their associated interface.

The “N” symbol in the signal name indicates that the active, or asserted, state occurs when the signal is at a low voltage level. When “N” is not present before the signal name, the signal is asserted when at the high voltage level.

The terms assertion and negation are used exclusively. This is done to avoid confusion when working with a mixture of “active low” and “active high” signals. The term assert, or assertion, indicates that a signal is active, independent of whether that level is represented by a high or low voltage. The term negate, or negation, indicates that a signal is inactive.

Table 3.1 USB2514 Pin Descriptions

SYMBOL	36 QFN	48 QFN	BUFFER TYPE	DESCRIPTION
UPSTREAM USB INTERFACES				
USBUP_DP USBUP_DM	31 30	43 42	IO-U	USB Bus Data These pins connect to the upstream USB bus data signals (Host port, or upstream hub).
VBUS_DET	27	35	I/O12	Detect Upstream VBUS Power Detects state of Upstream VBUS power. The SMSC Hub monitors VBUS_DET to determine when to assert the internal D+ pull-up resistor (signaling a connect event). When designing a detachable hub, this pin must be connected to the VBUS power pin of the USB port that is upstream of the hub. For self-powered applications with a permanently attached host, this pin must be connected to 3.3V (typically VDD33).
DOWNSTREAM 4-PORT USB 2.0 INTERFACE				
USBDN_DP[4:1]/ PRT_DIS_P[4:1] & USBDN_DM[4:1]/ PRT_DIS_M[4:1]	9 7 4 2	9 7 4 2	IO-U	High-Speed USB Data & Port Disable Strap Option These pins connect to the downstream USB peripheral devices attached to the hub’s port.
	8 6 3 1	8 6 3 1		Downstream Port Disable Strap option: If this strap is enabled by package and configuration settings (see Table 3.2), this pin will be sampled at RESET_N negation to determine if the port is disabled. Both USB data pins for the corresponding port must be tied to the VDDA33 to disable the associated downstream port.
PRTPWR[4:1]	20 18 16 12	27 21 19 15	O12	USB Power Enable Enables power to USB peripheral devices downstream. The active signal level of the PRTPWR[4:1] pins is determined by the Power Polarity Strapping function of the PRTPWR_POL pin.

Table 3.1 USB2514 Pin Descriptions (continued)

SYMBOL	36 QFN	48 QFN	BUFFER TYPE	DESCRIPTION
LED_A[4:1]_N/ PRT_SWP[4:1]	n/a	13 23 25 37	I/O12	Port LED Indicators & Port Swap strapping option Indicator LED for ports 1-4. Will be active low when LED support is enabled via EEPROM or SMBus.
				If this strap is enabled by package and configuration settings (see Table 3.2), this pin will be sampled at RESET_N negation to determine the electrical connection polarity of the downstream USB Port pins (USB_DP and USB_DM). Also, the active state of the LED will be determined as follows: ‘0’ = Port Polarity is normal, and the LED is active high. ‘1’ = Port Polarity (for USB_DP and USB_DM) is swapped, and the LED is active low.
LED_B4_N	n/a	12	I/O12	Enhanced Port 4 LED Enhanced Indicator LED for port 4. Will be active low when LED support is enabled via EEPROM or SMBus.
LED_B3_N/ GANG_EN	n/a	22	I/O12	Enhanced Port 3 LED & Gang Power and Overcurrent Strap Option Enhanced Indicator LED for port 3. Will be active low when LED support is enabled via EEPROM or SMBus.
				GANG_EN: Selects between Gang or Individual Port power and Over Current sensing. If this strap is enabled by package and configuration settings (see Table 3.2), this pin will be sampled at RESET_N negation to determine the mode as follows: ‘0’ = Individual sensing & switching, and LED_B3_N is active high. ‘1’ = Ganged sensing & switching, and LED_B3_N is active low.
LED_B[2:1]_N/ BOOST[1:0]	n/a	24 36	I/O12	Enhanced Port [2:1] LED & Phy Boost strapping option Enhanced Indicator LED for ports 1 & 2. Will be active low when LED support is enabled via EEPROM or SMBus.

Table 3.1 USB2514 Pin Descriptions (continued)

SYMBOL	36 QFN	48 QFN	BUFFER TYPE	DESCRIPTION
				BOOST[1:0], If this strap is enabled by package and configuration settings (see Table 3.2), this pin will be sampled at RESET_N negation to determine if all PHY ports (upstream and downstream) operate at a normal or boosted electrical level. Also, the active state of the LEDs will be determined as follows: See for BOOST values: Section 4.3.1.26, "Register F6h: Boost_Up (Reset = 0x00)" and Section 4.3.1.27, "Register F8h: Boost_4:0 (Reset = 0x00)". BOOST[1:0] = BOOST_IOUT[1:0] BOOST[1:0] = ‘00’, LED_B2_N is active high, LED_B1_N is active high. BOOST[1:0] = ‘01’, LED_B2_N is active high, LED_B1_N is active low. BOOST[1:0] = ‘10’, LED_B2_N is active low, LED_B1_N is active high. BOOST[1:0] = ‘11’, LED_B2_N is active low, LED_B1_N is active low.
PRTPWR_POL	n/a	38	I/O12	Port Power Polarity strapping Port Power Polarity strapping determination for the active signal polarity of the [4:1]PRTPWR pins. While RESET_N is asserted, the logic state of this pin will (through the use of internal combinatorial logic) determine the active state of the [4:1]PRTPWR pins in order to ensure that downstream port power is not inadvertently enabled to inactive ports during a hardware reset. When RESET_N is negated, the logic value will be latched internally, and will retain the active signal polarity for the PRTPWR[4:1] pins. ‘1’ = PRTPWR[4:1]_P/N pins have an active ‘high’ polarity ‘0’ = PRTPWR[4:1]_P/N pins have an active ‘low’ polarity Warning: Active Low port power controllers may glitch the downstream port power when system power is first applied. Care should be taken when designing with active low components! **Note:** If PRTPWR_POL is not an available pin on the package, the hub will support active high power controllers only!
OCS[4:1]_N	21 19 17 13	28 26 20 16	IPU	Over Current Sense Input from external current monitor indicating an over-current condition. {Note: Contains internal pull-up to 3.3V supply}

Table 3.1 USB2514 Pin Descriptions (continued)

SYMBOL	36 QFN	48 QFN	BUFFER TYPE	DESCRIPTION
RBIAS	35	47	I-R	USB Transceiver Bias A 12.0kΩ (+/- 1%) resistor is attached from ground to this pin to set the transceiver's internal bias settings.
SERIAL PORT INTERFACE				
SDA/ SMBDATA/ NON_REM1	22	29	I/OSD12	Serial Data / SMB Data & Port Non Removable Strap Option NON_REM1: Non removable port strap option. If this strap is enabled by package and configuration settings (see Table 3.2), this pin will be sampled (in conjunction with LOCAL_PWR/SUSP_IND/NON_REM0) at RESET_N negation to determine if imports [4:1] contain permanently attached (non-removable) devices: NON_REM[1:0] = '00', All ports are removable, NON_REM[1:0] = '01', Port 1 is nonremovable, NON_REM[1:0] = '10', Ports 1 & 2 are non-removable, NON_REM[1:0] = '11', Ports 1, 2 & 3 are non-removable
SCL/ SMBCLK/ CFG_SEL0	24	31	I/OSD12	Serial Clock (SCL) SMBus Clock (SMBCLK) Configuration Select_SEL0: The logic state of this multifunction pin is internally latched on the rising edge of RESET_N (RESET_N negation), and will determine the hub configuration method as described in Table 3.2, "SMBus or EEPROM Interface Behavior".
HS_IND/ CFG_SEL1	25	32	I/O12	High-Speed Upstream port indictor & Configuration Programming Select HS_IND: High Speed Indicator for upstream port connection speed. The active state of the LED will be determined as follows: CFG_SEL1 = '0', HS_IND is active high, CFG_SEL1 = '1', HS_IND is active low, 'Asserted' = Hub is connected at HS 'Negated' = Hub is connected at FS CFG_SEL1: The logic state of this pin is internally latched on the rising edge of RESET_N (RESET_N negation), and will determine the hub configuration method as described in Table 3.2, "SMBus or EEPROM Interface Behavior".

Table 3.1 USB2514 Pin Descriptions (continued)

SYMBOL	36 QFN	48 QFN	BUFFER TYPE	DESCRIPTION
CFG_SEL2	n/a	33	I	Configuration Programming Select **Note:** This pin is not available in all packages; it is held to a logic ‘0’ when not available The logic state of this pin is internally latched on the rising edge of RESET_N (RESET_N negation), and will determine the hub configuration method as described in Table 3.2, "SMBus or EEPROM Interface Behavior"
MISC				
XTAL1/ CLKIN	33	45	ICLKx	Crystal Input/External Clock Input 24MHz crystal or external clock input. This pin connects to either one terminal of the crystal or to an external 24/48MHz clock when a crystal is not used. **Note:** 48MHz only available in 48 QFN.
XTAL2	32	44	OCLKx	Crystal Output 24MHz Crystal This is the other terminal of the crystal, or pulled high when an external clock source is used to drive XTAL1/CLKIN. This output must not be used to drive any external circuitry other than the crystal circuit.
RESET_N	26	34	IS	RESET Input The system can reset the chip by driving this input low. The minimum active low pulse is 1 us. When the RESET_N pin is pulled to VDD33, the internal POR (Power on Reset) is enabled and no external reset circuitry is required. The internal POR holds the internal logic in reset until the power supplies are stable.

Table 3.1 USB2514 Pin Descriptions (continued)

SYMBOL	36 QFN	48 QFN	BUFFER TYPE	DESCRIPTION
SUSP_IND/ LOCAL_PWR/ NON_REM0	28	39	I/O	Active/Suspend status LED or Local-Power & Non Removable Strap Option Suspend Indicator: Indicates USB state of the hub. ‘negated’ = Unconfigured, or configured and in USB Suspend ‘asserted’ = Hub is configured, and is active (i.e., not in suspend)
				Local Power: Detects availability of local self-power source. Low = Self/local power source is NOT available (i.e., Hub gets all power from Upstream USB VBus). High = Self/local power source is available. NON_REM0 Strap Option: If this strap is enabled by package and configuration settings (see Table 3.2), this pin will be sampled (in conjunction with NON_REM1) at RESET_N negation to determine if ports [4:1] contain permanently attached (non-removable) devices. Also, the active state of the LED will be determined as follows: NON_REM[1:0] = ‘00’, All ports are removable, and the LED is active high NON_REM[1:0] = ‘01’, Port 1 is nonremovable, and the LED is active low NON_REM[1:0] = ‘10’, Ports 1 & 2 are non-removable, and the LED is active high NON_REM[1:0] = ‘11’, Ports 1, 2 & 3 are non-removable, and the LED is active low
TEST	11	14	IPD	TEST pin XNOR continuity tests all signal pins on the hub, please contact your SMSC representative for a detailed description of how this test mode is enabled and utilized.
SEL48	n/a	40	IPD	Select 48 MHz clock input 48MHz external clock input select:. When the hub is clocked from an external clock source, this pin selects either 24MHz or 48MHz mode. ‘0’ = 24MHz ‘1’ = 48MHz
REG_EN	n/a	11	IPU	Regulator Enable REG_EN: This pin is internally pulled up to enable the internal 1.8V regulators, and this pin should be treated as a no-connect. In order to disable the regulators, this pin will need to be externally connected to ground. When the internal regulator is enabled, the 1.8V power pins must be left unconnected, except for the required bypass capacitors.

Table 3.2 SMBus or EEPROM Interface Behavior

	CFG_SEL2	CFG_SEL1	CFG_SEL0	SMBUS OR EEPROM INTERFACE BEHAVIOR
36-Pin QFN	N/A	0	0	Internal Default Configuration ▪ Strap Options Enabled ▪ Port Indicators Not Supported
48-Pin QFN	0	0	0	
36-Pin QFN	N/A	0	1	Configured as an SMBus slave for external download of user-defined descriptors. ▪ SMBus slave address 58 (0101100x) ▪ Strap Options Disabled ▪ All Settings Controlled by Registers
48-Pin QFN	0	0	1	
36-Pin QFN	N/A	1	0	Internal Default Configuration ▪ Strap Options Enabled ▪ Bus Power Operation ▪ LED Mode = USB
48-Pin QFN	0	1	0	
36-Pin QFN	N/A	1	1	2-Wire I2C EEPROMS are supported. ▪ Strap Options Disabled ▪ All Settings Controlled by Registers
48-Pin QFN	0	1	1	
48-Pin QFN	1	0	0	Internal Default Configuration ▪ Strap Options Disabled ▪ Dynamic Power Switching Enabled
48-Pin QFN	1	0	1	Internal Default Configuration ▪ Strap Options Disabled ▪ Dynamic Power Switching Enabled ▪ LED Mode = USB
48-Pin QFN	1	1	0	Internal Default Configuration ▪ Strap Options Disabled
48-Pin QFN	1	1	1	Internal Default Configuration ▪ Strap Options Disabled ▪ LED Mode = USB ▪ Ganged Power Switching ▪ Ganged Over-Current Sensing

Notes:

Denotes 48-Pin QFN Denotes 36-Pin QFN

Table 3.3 USB2514 Power, Ground, No Connect

PACKAGE SYMBOL	36 QFN	48 QFN	FUNCTION
VDD18	14	17	VDD Core +1.8V core power. If the internal regulator is enabled, then this pin must have a 1.0µF (or greater) ±20% (ESR <0.1Ω) capacitor to VSS.
VDD33PLL	36	48	VDD 3.3 PLL Regulator Reference +3.3V power supply for the PLL. If the internal PLL 1.8V regulator is enabled, then this pin acts as the regulator input.
VDDPLL18	34	46	VDD PLL +1.8V Filtered analog power for internal PLL. If the internal regulator is enabled, then this pin must have a 4.7µF (or greater) ±20% (ESR <0.1Ω) capacitor to VSS.
VDDA33	5 10 29	5 10 41	VDD Analog I/O +3.3V Filtered analog PHY power, shared between adjacent ports.
VDD33/VDD33CR	23 15	30 18	VDDIO/VDD 3.3 Core Regulator Reference +3.3V power supply for the Digital I/O If the internal core regulator is enabled, then VDD33CR acts as the regulator input.
VSS	n/a	n/a	VSS Ground

3.2 Buffer Type Descriptions

Table 3.4 USB2514 Buffer Type Descriptions

BUFFER	DESCRIPTION
I	Input.
IPD	Input with internal weak pull-down resistor.
IPU	Input with internal weak pull-up resistor.
IS	Input with Schmitt trigger.
O12	Output 12mA.
OD12	Open drain... 12mA sink.
I/O12	Input/Output buffer with 12mA sink and 12mA source.

Table 3.4 USB2514 Buffer Type Descriptions (continued)

BUFFER	DESCRIPTION
I/OSD12	Open drain...12mA sink with Schmitt trigger, and must meet I2C-Bus Specification Version 2.1 requirements.
ICLKx	XTAL clock input.
OCLKx	XTAL clock output.
I-R	RBIAS.
I/O-U	Analog Input/Output Defined in USB specification.
AIO	Analog Input/Output.

Chapter 4 Configuration Options

4.1 4-Port Hub

SMSC's USB 2.0 4-Port Hub is fully specification compliant to the Universal Serial Bus Specification Revision 2.0 April 27, 2000 (12/7/2000 and 5/28/2002 Errata). Please reference Chapter 10 (Hub Specification) for general details regarding Hub operation and functionality.

For performance reasons, the 4-Port Hub provides 1 Transaction Translator (TT) per port (defined as Multi-TT configuration), divided into 4 non-periodic buffers per TT.

4.1.1 Hub Configuration Options

The SMSC Hub supports a large number of features (some are mutually exclusive), and must be configured in order to correctly function when attached to a USB host controller. There are three principal ways to configure the hub: SMBus, EEPROM, or by internal default settings (with or without pin strapping option over-rides). In all cases, the configuration method will be determined by the CFG_SEL2, CFG_SEL1 and CFG_SEL0 pins immediately after RESET_N negation.

4.1.1.1 Power Switching Polarity

The selection of active state "polarity" for the PRTPWR pins is made by a strapping option only (the PRTPWR_POL pin).

Note: If PRTPWR_POL is not an available pin on the package, the hub will support active high power controllers only!

4.1.2 VBus Detect

According to Section 7.2.1 of the USB 2.0 Specification, a downstream port can never provide power to its D+ or D- pull-up resistors unless the upstream port's VBUS is in the asserted (powered) state. The VBUS_DET pin on the Hub monitors the state of the upstream VBUS signal and will not pull-up the D+ resistor if VBUS is not active. If VBUS goes from an active to an inactive state (Not Powered), Hub will remove power from the D+ pull-up resistor within 10 seconds.

4.2 36 QFN and 48 QFN Feature Differences

Table 4.1 36 QFN and 48 QFN Feature Differences

36 QFN	48 QFN	FEATURE
N/A	Available	48MHz clock input mode
N/A	Available	External 1.8V regulators
N/A	Available	Port LED Indicators
N/A	Available	Port Swap Strapping Options
Available	N/A	Only Active High Port Power Control is supported in 36 QFN package
Available	N/A	Boost Default Level is used; see Table 4.2, "Internal EEPROM and SMBus Register Memory Map"

4.3 EEPROM Interface

The SMSC Hub can be configured via a 2-wire (I2C) EEPROM (256x8). (Please see Table 3.1 for specific details on how to enable configuration via an I2C EEPROM).

The Internal state-machine will (when configured for EEPROM support) read the external EEPROM for configuration data. The hub will then “attach” to the upstream USB host.

Note: The Hub does not have the capacity to write, or “Program,” an external EEPROM. The Hub only has the capability to read external EEPROMs. The external eeprom will be read (even if it is blank or non-populated), and the hub will be “configured” with the values that are read.

Please see Internal Register Set (Common to EEPROM and SMBus) for a list of data fields available.

4.3.1 Internal Register Set (Common to EEPROM and SMBus)

Table 4.2 Internal EEPROM and SMBus Register Memory Map

REG ADDR	R/W	REGISTER NAME	ABBR	DEFAULT ROM
00h	R/W	VID LSB	VIDL	24h
01h	R/W	VID MSB	VIDM	04h
02h	R/W	PID LSB	PIDL	14h
03h	R/W	PID MSB	PIDM	25h
04h	R/W	DID LSB	DIDL	00h
05h	R/W	DID MSB	DIDM	00h
06h	R/W	Config Data Byte 1	CFG1	9Bh
07h	R/W	Config Data Byte 2	CFG2	10h
08h	R/W	Config Data Byte 3	CFG3	00h
09h	R/W	Non-Removable Devices	NRD	00h
0Ah	R/W	Port Disable (Self)	PDS	00h
0Bh	R/W	Port Disable (Bus)	PDB	00h
0Ch	R/W	Max Power (Self)	MAXPS	01h
0Dh	R/W	Max Power (Bus)	MAXPB	64h
0Eh	R/W	Hub Controller Max Current (Self)	HCMCS	01h
0Fh	R/W	Hub Controller Max Current (Bus)	HCMCB	64h
10h	R/W	Power-on Time	PWRT	32h
11h	R/W	LANG_ID_H	LANGIDH	00h
12h	R/W	LANG_ID_L	LANGIDL	00h
13h	R/W	MFR_STR_LEN	MFRSL	00h
14h	R/W	PRD_STR_LEN	PRDSL	00h
15h	R/W	SER_STR_LEN	SERSL	00h
16h-53h	R/W	MFR_STR	MANSTR	00h

Table 4.2 Internal EEPROM and SMBus Register Memory Map (continued)

REG ADDR	R/W	REGISTER NAME	ABBR	DEFAULT ROM
54h-91h	R/W	PROD_STR	PRDSTR	00h
92h-Cfh	R/W	SER_STR	SERSTR	00h
D0h-F5h	R/W	Reserved	N/A	01h
F6h	R/W	Boost_Up	BOOSTUP	00h
F7h	R/W	Reserved	N/A	00h
F8h	R/W	Boost_4:0	BOOST40	00h
F9h	R/W	Reserved	N/A	00h
FAh	R/W	Port Swap	PRTSP	00h
FBh	R/W	Port Remap 12	PRTR12	00h
FCh	R/W	Port Remap 34	PRTR34	00h
FDh-FEh	R/W	Reserved	N/A	00h
FFh	R/W	Status/Command **Note:** SMBus register only	STCD	00h

4.3.1.1 Register 00h: Vendor ID (LSB) (Reset = 0x00)

BIT NUMBER	BIT NAME	DESCRIPTION
7:0	VID_LSB	Least Significant Byte of the Vendor ID. This is a 16-bit value that uniquely identifies the Vendor of the user device (assigned by USB-Interface Forum). This field is set by the OEM using either the SMBus or EEPROM interface options.

4.3.1.2 Register 01h: Vendor ID (MSB) (Reset = 0x00)

BIT NUMBER	BIT NAME	DESCRIPTION
7:0	VID_MSB	Most Significant Byte of the Vendor ID. This is a 16-bit value that uniquely identifies the Vendor of the user device (assigned by USB-Interface Forum). This field is set by the OEM using either the SMBus or EEPROM interface options.

4.3.1.3 Register 02h: Product ID (LSB) (Reset = 0x00)

BIT NUMBER	BIT NAME	DESCRIPTION
7:0	PID_LSB	Least Significant Byte of the Product ID. This is a 16-bit value that the Vendor can assign that uniquely identifies this particular product (assigned by OEM). This field is set by the OEM using either the SMBus or EEPROM interface options.

4.3.1.4 Register 03h: Product ID (MSB) (Reset = 0x00)

BIT NUMBER	BIT NAME	DESCRIPTION
7:0	PID_MSB	Most Significant Byte of the Product ID. This is a 16-bit value that the Vendor can assign that uniquely identifies this particular product (assigned by OEM). This field is set by the OEM using either the SMBus or EEPROM interface options.

4.3.1.5 Register 04h: Device ID (LSB) (Reset = 0x00)

BIT NUMBER	BIT NAME	DESCRIPTION
7:0	DID_LSB	Least Significant Byte of the Device ID. This is a 16-bit device release number in BCD format (assigned by OEM). This field is set by the OEM using either the SMBus or EEPROM interface options.

4.3.1.6 Register 05h: Device ID (MSB) (Reset = 0x00)

BIT NUMBER	BIT NAME	DESCRIPTION
7:0	DID_MSB	Most Significant Byte of the Device ID. This is a 16-bit device release number in BCD format (assigned by OEM). This field is set by the OEM using either the SMBus or EEPROM interface options.

4.3.1.7 Register 06h: CONFIG_BYTE_1 (Reset = 0x00)

BIT NUMBER	BIT NAME	DESCRIPTION
7	SELF_BUS_PWR	Self or Bus Power: Selects between Self- and Bus-Powered operation. The Hub is either Self-Powered (draws less than 2mA of upstream bus power) or Bus-Powered (limited to a 100mA maximum of upstream power prior to being configured by the host controller). When configured as a Bus-Powered device, the SMSC Hub consumes less than 100mA of current prior to being configured. After configuration, the Bus-Powered SMSC Hub (along with all associated hub circuitry, any embedded devices if part of a compound device, and 100mA per externally available downstream port) must consume no more than 500mA of upstream VBUS current. The current consumption is system dependent, and the OEM must ensure that the USB 2.0 specifications are not violated. When configured as a Self-Powered device, <1mA of upstream VBUS current is consumed and all ports are available, with each port being capable of sourcing 500mA of current. This field is set by the OEM using either the SMBus or EEPROM interface options. Please see the description under Dynamic Power for the self/bus power functionality when dynamic power switching is enabled. 0 = Bus-Powered operation 1 = Self-Powered operation **Note:** If Dynamic Power Switching is enabled, this bit is ignored and the LOCAL_PWR pin is used to determine if the hub is operating from self or bus power.
6	Reserved	Reserved
5	HS_DISABLE	High Speed Disable: Disables the capability to attach as either a High/Full-speed device, and forces attachment as Full-speed only (i.e. no High-Speed support). 0 = High-/Full-Speed 1 = Full-Speed-Only (High-Speed disabled!)
4	MTT_ENABLE	Multi-TT enable: Enables one transaction translator per port operation. Selects between a mode where only one transaction translator is available for all ports (Single-TT), or each port gets a dedicated transaction translator (Multi-TT) {Note: The host may force Single-TT mode only}. When using the internal default option, the MTT_EN pin enables/disables MTT support. 0 = single TT for all ports 1 = one TT per port (multiple TT's supported)
3	EOP_DISABLE	EOP Disable: Disables EOP generation of EOF1 when in Full-Speed mode. During FS operation only, this permits the Hub to send EOP if no downstream traffic is detected at EOF1. See Section 11.3.1 of the USB 2.0 Specification for additional details. Note: generation of an EOP at the EOF1 point may prevent a Host controller (operating in FS mode) from placing the USB bus in suspend. 0 = EOP generation is normal 1 = EOP generation is disabled
2:1	CURRENT_SNS	Over Current Sense: Selects current sensing on a port-by-port basis, all ports ganged, or none (only for bus-powered hubs). The ability to support current sensing on a port or ganged basis is hardware implementation dependent. 00 = Ganged sensing (all ports together) 01 = Individual port-by-port 1x = Over current sensing not supported (must only be used with Bus-Powered configurations!)

BIT NUMBER	BIT NAME	DESCRIPTION
0	PORT_PWR	Port Power Switching: Enables power switching on all ports simultaneously (ganged), or port power is individually switched on and off on a port- by-port basis (individual). The ability to support power enabling on a port or ganged basis is hardware implementation dependent. 0 = Ganged switching (all ports together) 1 = Individual port-by-port switching

4.3.1.8 Register 07h: Configuration Data Byte 2 (Reset = 0x00)

BIT NUMBER	BIT NAME	DESCRIPTION
7	DYNAMIC	Dynamic Power Enable: Controls the ability of the Hub to automatically change from Self-Powered operation to Bus-Powered operation if the local power source is removed or is unavailable (and from Bus-Powered to Self-Powered if the local power source is restored). {Note: If the local power source is available, the Hub will always switch to Self-Powered operation.} When Dynamic Power switching is enabled, the Hub detects the availability of a local power source by monitoring the external LOCAL_PWR pin. If the Hub detects a change in power source availability, the Hub immediately disconnects and removes power from all downstream devices and disconnects the upstream port. The Hub will then re-attach to the upstream port as either a Bus-Powered Hub (if local-power is unavailable) or a Self-Powered Hub (if local power is available). 0 = No Dynamic auto-switching 1 = Dynamic Auto-switching capable
6	Reserved	Reserved
5:4	OC_TIMER	OverCurrent Timer: Over Current Timer delay. 00 = 0.1ms 01 = 4ms 10 = 8ms 11 = 16ms
3	COMPOUND	Compound Device: Allows the OEM to indicate that the Hub is part of a compound (see the USB Specification for definition) device. The applicable port(s) must also be defined as having a "Non-Removable Device". **Note:** When configured via strapping options, declaring a port as non-removable automatically causes the hub controller to report that it is part of a compound device. 0 = No 1 = Yes, Hub is part of a compound device
2:0	Reserved	Reserved

4.3.1.9 Register 08h: Configuration Data Byte 3 (Reset = 0x00)

BIT NUMBER	BIT NAME	DESCRIPTION
7:4	Reserved	Reserved
3	PRTMAP_EN	Port Re-mapping enable: Selects the method used by the hub to assign port numbers and disable ports. ‘0’ = Standard Mode ‘1’ = Port Re-map mode
2:1	LED_MODE	LED Mode Selection: The LED_A[4:1]_N and LED_B[4:1]_N pins support several different modes of operation. ‘00’ = USB Mode ‘01’ = Speed Indication Mode ‘10’ = Same as ‘00’, USB Mode ‘11’ = Same as ‘00’, USB Mode Warning: Do not enable an LED mode that requires LED pins that are not available in the specific package being used in the implementation! **Note:** The Hub will only report that it supports LED's to the host when USB mode is selected. All other modes will be reported as No LED Support.
0	STRING_EN	Enables String Descriptor Support ‘0’ = String Support Disabled ‘1’ = String Support Enabled

4.3.1.10 Register 09h: Non-Removable Device (Reset = 0x00)

BIT NUMBER	BIT NAME	DESCRIPTION
7:0	NR_DEVICE	Non-Removable Device: Indicates which port(s) include non-removable devices. ‘0’ = port is removable, ‘1’ = port is non-removable. Informs the Host if one of the active ports has a permanent device that is undetachable from the Hub. (Note: The device must provide its own descriptor data.) When using the internal default option, the NON_REM[1:0] pins will designate the appropriate ports as being non- removable. Bit 7= Reserved Bit 6= Reserved Bit 5= Reserved Bit 4= 1; Port 4 non-removable Bit 3= 1; Port 3 non-removable Bit 2= 1; Port 2 non-removable Bit 1= 1; Port 1 non removable Bit 0 is Reserved, always = ‘0’

4.3.1.11 Register 0Ah: Port Disable For Self Powered Operation (Reset = 0x00)

BIT NUMBER	BIT NAME	DESCRIPTION
7:0	PORT_DIS_SP	Port Disable Self-Powered: Disables 1 or more contiguous ports. ‘0’ = port is available, ‘1’ = port is disabled. During Self-Powered operation, this selects the ports which will be permanently disabled, and are not available to be enabled or enumerated by a Host Controller. The ports can be disabled in any order, the internal logic will automatically report the correct number of enabled ports to the USB Host, and will reorder the active ports in order to ensure proper function. Bit 7= Reserved Bit 6= Reserved Bit 5= Reserved Bit 4= 1; Port 4 is disabled Bit 3= 1; Port 3 is disabled Bit 2= 1; Port 2 is disabled Bit 1= 1; Port 1 is disabled Bit 0 is Reserved, always = ‘0’

4.3.1.12 Register 0Bh: Port Disable For Bus Powered Operation (Reset = 0x00)

BIT NUMBER	BIT NAME	DESCRIPTION
7:0	PORT_DIS_BP	Port Disable Bus-Powered: Disables 1 or more contiguous ports. ‘0’ = port is available, ‘1’ = port is disabled. During Bus-Powered operation, this selects the ports which will be permanently disabled, and are not available to be enabled or enumerated by a Host Controller. The ports can be disabled in any order, the internal logic will automatically report the correct number of enabled ports to the USB Host, and will reorder the active ports in order to ensure proper function. When using the internal default option, the PRT_DIS[1:0] pins will disable the appropriate ports. Bit 7= Reserved Bit 6= Reserved Bit 5= Reserved Bit 4= 1; Port 4 is disabled Bit 3= 1; Port 3 is disabled Bit 2= 1; Port 2 is disabled Bit 1= 1; Port 1 is disabled Bit 0 is Reserved, always = ‘0’

4.3.1.13 Register 0Ch: Max Power For Self Powered Operation (Reset = 0x00)

BIT NUMBER	BIT NAME	DESCRIPTION
7:0	MAX_PWR_SP	Max Power Self_Powered: Value in 2mA increments that the Hub consumes from an upstream port (VBUS) when operating as a self-powered hub. This value includes the hub silicon along with the combined power consumption (from VBUS) of all associated circuitry on the board. This value also includes the power consumption of a permanently attached peripheral if the hub is configured as a compound device, and the embedded peripheral reports 0mA in its descriptors. **Note:** The USB 2.0 Specification does not permit this value to exceed 100mA

4.3.1.14 Register 0Dh: Max Power For Bus Powered Operation (Reset = 0x00)

BIT NUMBER	BIT NAME	DESCRIPTION
7:0	MAX_PWR_BP	Max Power Bus_Powered: Value in 2mA increments that the Hub consumes from an upstream port (VBUS) when operating as a bus-powered hub. This value includes the hub silicon along with the combined power consumption (from VBUS) of all associated circuitry on the board. This value also includes the power consumption of a permanently attached peripheral if the hub is configured as a compound device, and the embedded peripheral reports 0mA in its descriptors.

4.3.1.15 Register 0Eh: Hub Controller Max Current For Self Powered Operation (Reset = 0x00)

BIT NUMBER	BIT NAME	DESCRIPTION
7:0	HC_MAX_C_SP	Hub Controller Max Current Self-Powered: Value in 2mA increments that the Hub consumes from an upstream port (VBUS) when operating as a self-powered hub. This value includes the hub silicon along with the combined power consumption (from VBUS) of all associated circuitry on the board. This value does NOT include the power consumption of a permanently attached peripheral if the hub is configured as a compound device. **Note:** The USB 2.0 Specification does not permit this value to exceed 100mA A value of 50 (decimal) indicates 100mA, which is the default value.

4.3.1.16 Register 0Fh: Hub Controller Max Current For Bus Powered Operation (Reset = 0x00)

BIT NUMBER	BIT NAME	DESCRIPTION
7:0	HC_MAX_C_BP	Hub Controller Max Current Bus-Powered: Value in 2mA increments that the Hub consumes from an upstream port (VBUS) when operating as a bus-powered hub. This value will include the hub silicon along with the combined power consumption (from VBUS) of all associated circuitry on the board. This value will NOT include the power consumption of a permanently attached peripheral if the hub is configured as a compound device. A value of 50 (decimal) would indicate 100mA, which is the default value.

4.3.1.17 Register 10h: Power-On Time (Reset = 0x00)

BIT NUMBER	BIT NAME	DESCRIPTION
7:0	POWER_ON_TIME	Power On Time: The length of time that it takes (in 2 ms intervals) from the time the host initiated power-on sequence begins on a port until power is good on that port.

4.3.1.18 Register 11h: Language ID High (Reset = 0x00)

BIT NUMBER	BIT NAME	DESCRIPTION
7:0	LANG_ID_H	USB LANGUAGE ID (Upper 8 bits of a 16 bit ID field)

4.3.1.19 Register 12h: Language ID Low (Reset = 0x00)

BIT NUMBER	BIT NAME	DESCRIPTION
7:0	LANG_ID_L	USB LANGUAGE ID (Lower 8 bits of a 16 bit ID field)

4.3.1.20 Register 13h: Manufacturer String Length (Reset = 0x00)

BIT NUMBER	BIT NAME	DESCRIPTION
7:0	MFR_STR_LEN	Manufacturer String Length Maximum string length is 31 characters

4.3.1.21 Register 14h: Product String Length (Reset = 0x00)

BIT NUMBER	BIT NAME	DESCRIPTION
7:0	PRD_STR_LEN	Product String Length Maximum string length is 31 characters

4.3.1.22 Register 15h: Serial String Length (Reset = 0x00)

BIT NUMBER	BIT NAME	DESCRIPTION
7:0	SER_STR_LEN	Serial String Length Maximum string length is 31 characters

4.3.1.23 Register 16h-53h: Manufacturer String (Reset = 0x00)

BIT NUMBER	BIT NAME	DESCRIPTION
7:0	MFR_STR	Manufacturer String, UNICODE UTF-16LE per USB 2.0 Specification Maximum string length is 31 characters (62 bytes) **Note:** The String consists of individual 16 Bit UNICODE UTF-16LE characters. The Characters will be stored starting with the LSB at the least significant address and the MSB at the next 8-bit location (subsequent characters must be stored in sequential contiguous address in the same LSB, MSB manner). Some EEPROM programmers may transpose the MSB and LSB, thus reversing the Byte order. Please pay careful attention to the Byte ordering or your selected programming tools.

4.3.1.24 Register 54h-91h: Product String (Reset = 0x00)

BIT NUMBER	BIT NAME	DESCRIPTION
7:0	PRD_STR	Product String, UNICODE UTF-16LE per USB 2.0 Specification Maximum string length is 31 characters (62 bytes) **Note:** The String consists of individual 16 Bit UNICODE UTF-16LE characters. The Characters will be stored starting with the LSB at the least significant address and the MSB at the next 8-bit location (subsequent characters must be stored in sequential contiguous address in the same LSB, MSB manner). Some EEPROM programmers may transpose the MSB and LSB, thus reversing the Byte order. Please pay careful attention to the Byte ordering or your selected programming tools.

4.3.1.25 Register 92h-CFh: Serial String (Reset = 0x00)

BIT NUMBER	BIT NAME	DESCRIPTION
7:0	SER_STR	Serial String, UNICODE UTF16LE per USB 2.0 Specification Maximum string length is 31 characters (62 bytes) **Note:** The String consists of individual 16 Bit UNICODE UTF-16LE characters. The Characters will be stored starting with the LSB at the least significant address and the MSB at the next 8-bit location (subsequent characters must be stored in sequential contiguous address in the same LSB, MSB manner). Some EEPROM programmers may transpose the MSB and LSB, thus reversing the Byte order. Please pay careful attention to the Byte ordering or your selected programming tools.

4.3.1.26 Register F6h: Boost_Up (Reset = 0x00)

BIT NUMBER	BIT NAME	DESCRIPTION
7:2	Reserved	Reserved
1:0	BOOST_IOUT	Upstream USB electrical signaling drive strength Boost Bit for Upstream Port. ‘00’ = Normal electrical drive strength ‘01’ = Elevated electrical drive strength (+4% boost) ‘10’ = Elevated electrical drive strength (+8% boost) ‘11’ = Elevated electrical drive strength (+12% boost) **Note:** “Boost” could result in non-USB Compliant parameters (one example would be Test J/K levels), the OEM should use a ‘00’ value unless specific implementation issues require additional signal boosting to correct for degraded USB signalling levels.

4.3.1.27 Register F8h: Boost_4:0 (Reset = 0x00)

BIT NUMBER	BIT NAME	DESCRIPTION
7:6	BOOST_IOUT_4	Upstream USB electrical signaling drive strength Boost Bit for Downstream Port ‘4’. ‘00’ = Normal electrical drive strength ‘01’ = Elevated electrical drive strength (+4% boost) ‘10’ = Elevated electrical drive strength (+8% boost) ‘11’ = Elevated electrical drive strength (+12% boost)
5:4	BOOST_IOUT_3	Upstream USB electrical signaling drive strength Boost Bit for Downstream Port ‘3’. ‘00’ = Normal electrical drive strength ‘01’ = Elevated electrical drive strength (+4% boost) ‘10’ = Elevated electrical drive strength (+8% boost) ‘11’ = Elevated electrical drive strength (+12% boost) **Note:** “Boost” could result in non-USB Compliant parameters (one example would be Test J/K levels), the OEM should use a ‘00’ value unless specific implementation issues require additional signal boosting to correct for degraded USB signalling levels.
3:2	BOOST_IOUT_2	Upstream USB electrical signaling drive strength Boost Bit for Downstream Port ‘2’. ‘00’ = Normal electrical drive strength ‘01’ = Elevated electrical drive strength (+4% boost) ‘10’ = Elevated electrical drive strength (+8% boost) ‘11’ = Elevated electrical drive strength (+12% boost) **Note:** “Boost” could result in non-USB Compliant parameters (one example would be Test J/K levels), the OEM should use a ‘00’ value unless specific implementation issues require additional signal boosting to correct for degraded USB signalling levels.
1:0	BOOST_IOUT_1	Upstream USB electrical signaling drive strength Boost Bit for Downstream Port ‘1’. ‘00’ = Normal electrical drive strength ‘01’ = Elevated electrical drive strength (+4% boost) ‘10’ = Elevated electrical drive strength (+8% boost) ‘11’ = Elevated electrical drive strength (+12% boost) **Note:** “Boost” could result in non-USB Compliant parameters (one example would be Test J/K levels), the OEM should use a ‘00’ value unless specific implementation issues require additional signal boosting to correct for degraded USB signalling levels.

4.3.1.28 Register FAh: Port Swap (Reset = 0x00)

BIT NUMBER	BIT NAME	DESCRIPTION
7:0	PRTSP	Port Swap: Swaps the Upstream and Downstream USB DP and DM Pins for ease of board routing to devices and connectors. ‘0’ = USB D+ functionality is associated with the DP pin and D- functionality is associated with the DM pin. ‘1’ = USB D+ functionality is associated with the DM pin and D- functionality is associated with the DP pin.

4.3.1.29 Register FBh: Port Remap 12 (Reset 0x00)

BIT NUMBER	BIT NAME	DESCRIPTION
7:0	PRTR12	Port remap register for ports 1 & 2.

4.3.1.30 Register FCh: Port Remap 34 (Reset = 0x00)

BIT NUMBER	BIT NAME	DESCRIPTION
7:0	PRTR34	Port remap register for ports 3 & 4.

4.3.1.31 Register FFh: Status/Command (Reset = 0x00)

BIT NUMBER	BIT NAME	DESCRIPTION
7:3	Reserved	Reserved
2	INTF_PW_DN	SMBus Interface Power Down ‘0’ = Interface is active ‘1’ = Interface power down after ACk has completed
1	RESET	Reset the SMBus Interface and internal memory back to RESET_N assertion default settings. ‘0’ = Normal Run/Idle State ‘1’ = Force a reset of registers to their default state
0	USB_ATTACH	USB Attach (and write protect) ‘0’ = SMBus slave interface is active ‘1’ = Hub will signal a USB attach event to an upstream device, and the internal memory (address range 00h-FEh) is “write-protected” to prevent unintentional data corruption.

4.3.2 I2C EEPROM

The I2C EEPROM interface implements a subset of the I2C Master Specification (Please refer to the Philips Semiconductor Standard I2C-Bus Specification for details on I2C bus protocols). The Hub’s I2C EEPROM interface is designed to attach to a single “dedicated” I2C EEPROM, and it conforms to the Standard-mode I2C Specification (100kbit/s transfer rate and 7-bit addressing) for protocol and electrical compatibility.

Note: Extensions to the I2C Specification are not supported.

The Hub acts as the master and generates the serial clock SCL, controls the bus access (determines which device acts as the transmitter and which device acts as the receiver), and generates the START and STOP conditions.

4.3.2.1 Implementation Characteristics

The Hub will only access an EEPROM using the Sequential Read Protocol.

4.3.2.2 Pull-Up Resistor

The Circuit board designer is required to place external pull-up resistors (10KΩ recommended) on the SDA/SMBDATA & SCL/SMBCLK/CFG_SELO lines (per SMBus 1.0 Specification, and EEPROM manufacturer guidelines) to Vcc in order to assure proper operation.

4.3.2.3 I2C EEPROM Slave Address

Slave address is 1010000.

Note: 10-bit addressing is NOT supported.

4.3.3 In-Circuit EEPROM Programming

The EEPROM can be programmed via ATE by pulling RESET_N low (which tri-states the Hub's EEPROM interface and allows an external source to program the EEPROM).

4.4 SMBus Slave Interface

Instead of loading User-Defined Descriptor data from an external EEPROM, the SMSC Hub can be configured to receive a code load from an external processor via an SMBus interface. The SMBus interface shares the same pins as the EEPROM interface; if CFG_SEL1 & CFG_SEL0 activates the SMBus interface, external EEPROM support is no longer available (and the user-defined descriptor data must be downloaded via the SMBus). Due to system issues, the SMSC Hub waits indefinitely for the SMBus code load to complete and only "appears" as a newly connected device on USB after the code load is complete.

The Hub's SMBus implementation is a subset of the SMBus interface to the host. The device is a *slave-only* SMBus device. The implementation in the device is a subset of SMBus since it only supports two protocols.

The Write Block and Read Block protocols are the only valid SMBus protocols for the Hub. The Hub responds to other protocols as described in Section 4.4.2, "Invalid Protocol Response Behavior," on page 33. Reference the System Management Bus Specification, Rev 1.0.

The SMBus interface is used to read and write the registers in the device. The register set is shown in Section 4.3.1, "Internal Register Set (Common to EEPROM and SMBus)," on page 19.

4.4.1 Bus Protocols

Typical Write Block and Read Block protocols are shown below. Register accesses are performed using 7-bit slave addressing, an 8-bit register address field, and an 8-bit data field. The shading indicates the Hub driving data on the SMBDATA line; otherwise, host data is on the SDA/SMBDATA line.

The slave address is the unique SMBus Interface Address for the Hub that identifies it on SMBus. The register address field is the internal address of the register to be accessed. The register data field is the data that the host is attempting to write to the register or the contents of the register that the host is attempting to read.

Note: Data bytes are transferred MSB first (msb first).

4.4.1.1 Block Read/Write

The Block Write begins with a slave address and a write condition. After the command code, the host issues a byte count which describes how many more bytes will follow in the message. If a slave had

20 bytes to send, the first byte would be the number 20 (14h), followed by the 20 bytes of data. The byte count may not be 0. A Block Read or Write is allowed to transfer a maximum of 32 data bytes.

Note: For the following SMBus tables:

Denotes Master-to-Slave Denotes Slave-to-Master

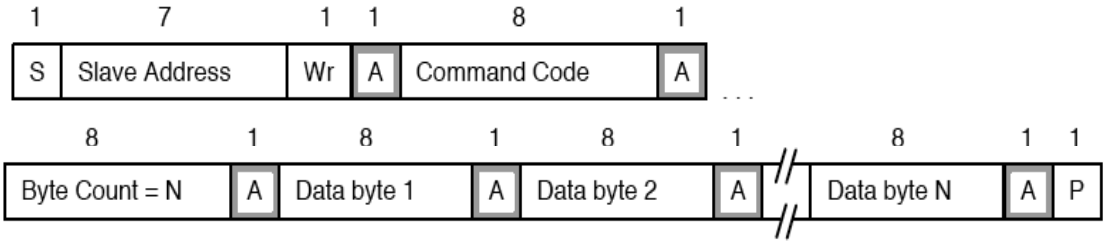

Block Write

Figure 4.1 Block Write

Block Read

A Block Read differs from a block write in that the repeated start condition exists to satisfy the I2C specification's requirement for a change in the transfer direction.

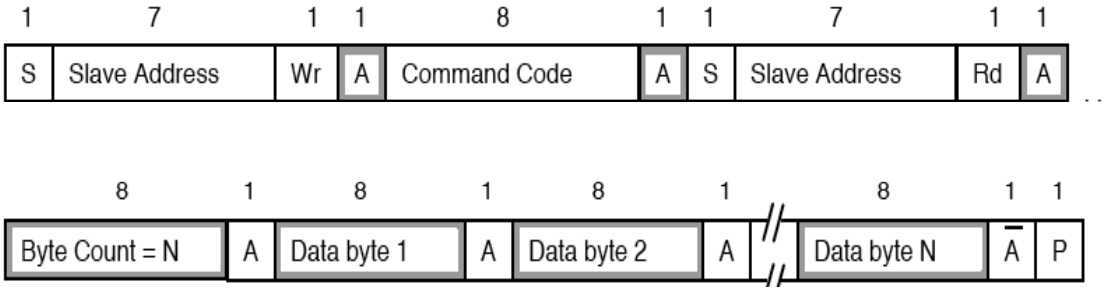

Block Read

Figure 4.2 Block Read

4.4.2 Invalid Protocol Response Behavior

Registers that are accessed with an invalid protocol are not updated. A register is only updated following a valid protocol. The only valid protocols are Write Block and Read Block, which are described above.

The Hub only responds to the hardware selected Slave Address.

Attempting to communicate with the Hub over SMBus with an invalid slave address or invalid protocol results in no response, and the SMBus Slave Interface returns to the idle state.

The only valid registers that are accessible by the SMBus slave address are the registers defined in the Registers Section. See Section 4.4.3 for the response to undefined registers.

4.4.3 General Call Address Response

The Hub does not respond to a general call address of 0000_000b.

4.4.4 Slave Device Time-Out

According to the SMBus Specification, V1.0 devices in a transfer can abort the transfer in progress and release the bus when any single clock low interval exceeds 25ms ($T_{TIMEOUT, MIN}$). Devices that have detected this condition must reset their communication and be able to receive a new START condition no later than 35ms ($T_{TIMEOUT, MAX}$).

Note: Some simple devices do not contain a clock low drive circuit; this simple kind of device typically resets its communications port after a start or stop condition. The Slave Device Time-Out must be implemented.

4.4.5 Stretching the SCLK Signal

The Hub supports stretching of the SCLK by other devices on the SMBus. The Hub does not stretch the SCLK.

4.4.6 SMBus Timing

The SMBus Slave Interface complies with the SMBus AC Timing Specification. See the SMBus timing in the “Timing Diagram” section.

4.4.7 Bus Reset Sequence

The SMBus Slave Interface resets and returns to the idle state upon a START field followed immediately by a STOP field.

4.4.8 SMBus Alert Response Address

The SMBALERT# signal is not supported by the Hub.

4.4.8.1 Undefined Registers

The registers shown in Table 4.2 are the defined registers in the Hub. Reads to undefined registers return 00h. Writes to undefined registers have no effect and do not return an error.

4.4.8.2 Reserved Registers

Unless otherwise instructed, only a ‘0’ may be written to all reserved registers or bits.

4.5 Default Configuration Option:

The SMSC Hub can be configured via its internal default configuration. (please see Section 4.3.1, "Internal Register Set (Common to EEPROM and SMBus)" for specific details on how to enable default configuration.)

Please refer to Table 4.2 for the internal default values that are loaded when this option is selected.

4.6 Default Strapping Options:

The USB2514 can be configured via a combination of internal default values and pin strap options. Please see Table 3.1 and Table 3.2 for specific details on how to enable the default/pin-strap configuration option.

The strapping option pins only cover a limited sub-set of the configuration options. The internal default values will be used for the bits & registers that are not controlled by a strapping option pin. Please refer to Table 4.2 for the internal default values that are loaded when this option is selected.

The Amber and Green LED pins are sampled after RESET_N negation, and the logic values are used to configure the hub if the internal default configuration mode is selected. The implementation shown below (see Figure 4.3) shows a recommended passive scheme. When a pin is configured with a “Strap High” configuration, the LED functions with active low signalling, and the PAD will “sink” the current from the external supply. When a pin is configured with a “Strap Low” configuration, the LED functions with active high signalling, and the PAD will “source” the current to the external LED.

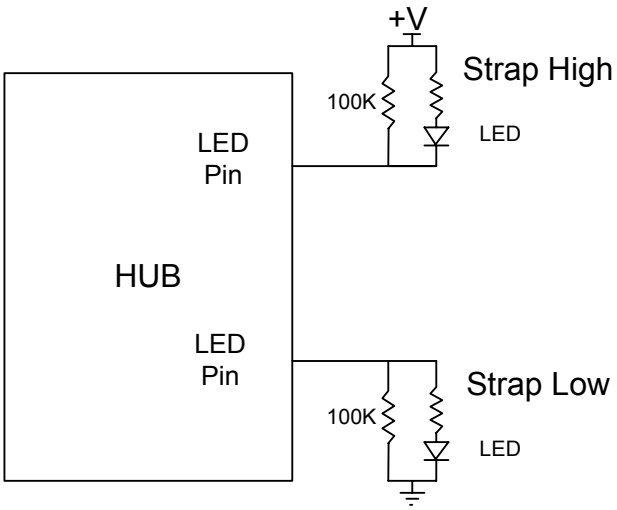

Figure 4.3 LED Strapping Option

4.7 Reset

There are two different resets that the Hub experiences. One is a hardware reset (either from the internal POR reset circuit or via the RESET_N pin) and the second is a USB Bus Reset.

4.7.1 Internal POR Hardware Reset

All reset timing parameters are guaranteed by design.

4.7.2 External Hardware RESET_N

A valid hardware reset is defined as assertion of RESET_N for a minimum of 1us after all power supplies are within operating range. While reset is asserted, the Hub (and its associated external circuitry) consumes less than 500µA of current from the upstream USB power source.

Assertion of RESET_N (external pin) causes the following:

1. All downstream ports are disabled, and PRTPWR power to downstream devices is removed.
2. The PHYs are disabled, and the differential pairs will be in a high-impedance state.
3. All transactions immediately terminate; no states are saved.
4. All internal registers return to the default state (in most cases, 00(h)).
5. The external crystal oscillator is halted.
6. The PLL is halted.
7. LED indicators are disabled.

The Hub is “operational” 500µs after RESET_N is negated.

Once operational, the Hub immediately reads OEM-specific data from the external EEPROM (if the SMBus option is not disabled).

4.7.2.1 RESET_N for Strapping Option Configuration

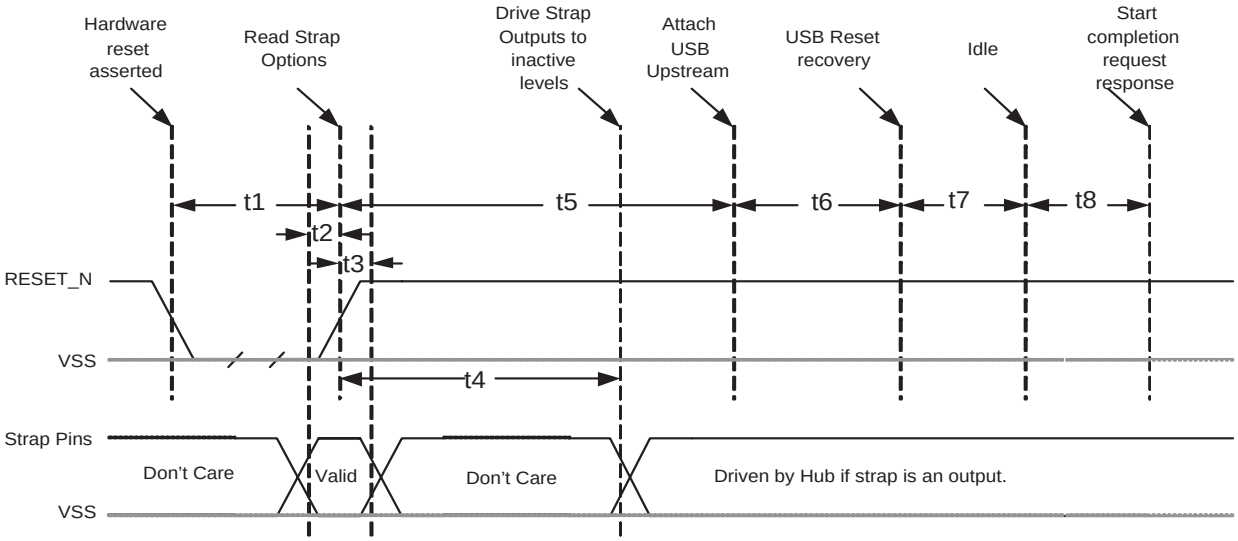

Figure 4.4 Reset_N Timing for Default/Strap Option Mode

Table 4.3 Reset_N Timing for Default/Strap Option Mode

NAME	DESCRIPTION	MIN	TYP	MAX	UNITS
t1	RESET_N Asserted.	1			µsec
t2	Strap Setup Time	16.7			nsec
t3	Strap Hold Time.	16.7		1400	nsec
t4	hub outputs driven to inactive logic states		1.5	2	µsec
t5	USB Attach (See Note).			100	msec
t6	Host acknowledges attach and signals USB Reset.	100			msec
t7	USB Idle.		undefined		msec
t8	Completion time for requests (with or without data stage).			5	msec

Notes:

- When in Bus-Powered mode, the Hub and its associated circuitry must not consume more than 100mA from the upstream USB power source during t1+t5.
- All Power Supplies must have reached the operating levels mandated in Chapter 5, DC Parameters, prior to (or coincident with) the assertion of RESET_N.

4.7.2.2 RESET_N for EEPROM Configuration

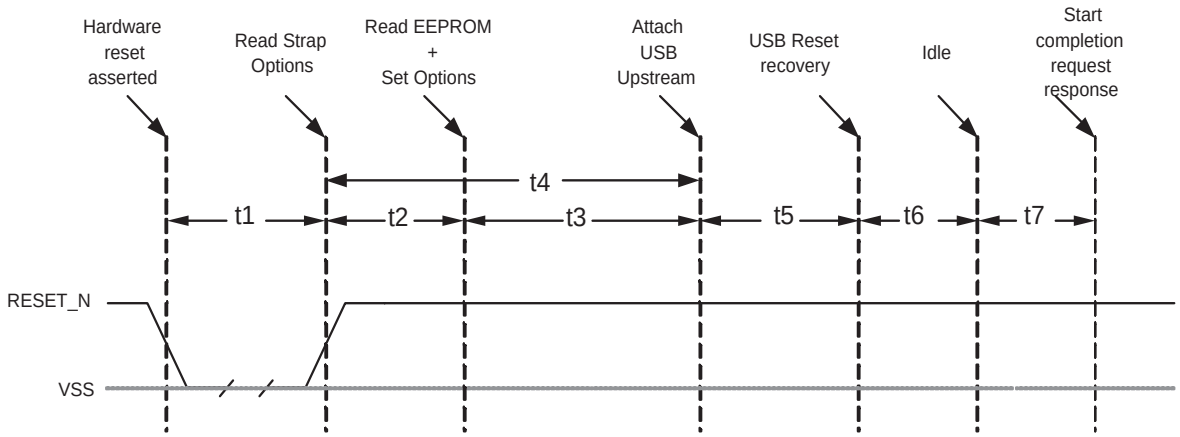

Figure 4.5 Reset_N Timing for EEPROM Mode

Table 4.4 Reset_N Timing for EEPROM Mode

NAME	DESCRIPTION	MIN	TYP	MAX	UNITS
t1	RESET_N Asserted.	1			µsec
t2	Hub Recovery/Stabilization.			500	µsec
t3	EEPROM Read / Hub Config.		2.0	99.5	msec
t4	USB Attach (See Note).			100	msec
t5	Host acknowledges attach and signals USB Reset.	100			msec
t6	USB Idle.		undefined		msec
t7	Completion time for requests (with or without data stage).			5	msec

Notes:

- When in Bus-Powered mode, the Hub and its associated circuitry must not consume more than 100mA from the upstream USB power source during t4+t5+t6+t7.
- All Power Supplies must have reached the operating levels mandated in Chapter 5, DC Parameters, prior to (or coincident with) the assertion of RESET_N.

4.7.2.3 RESET_N for SMBus Slave Configuration

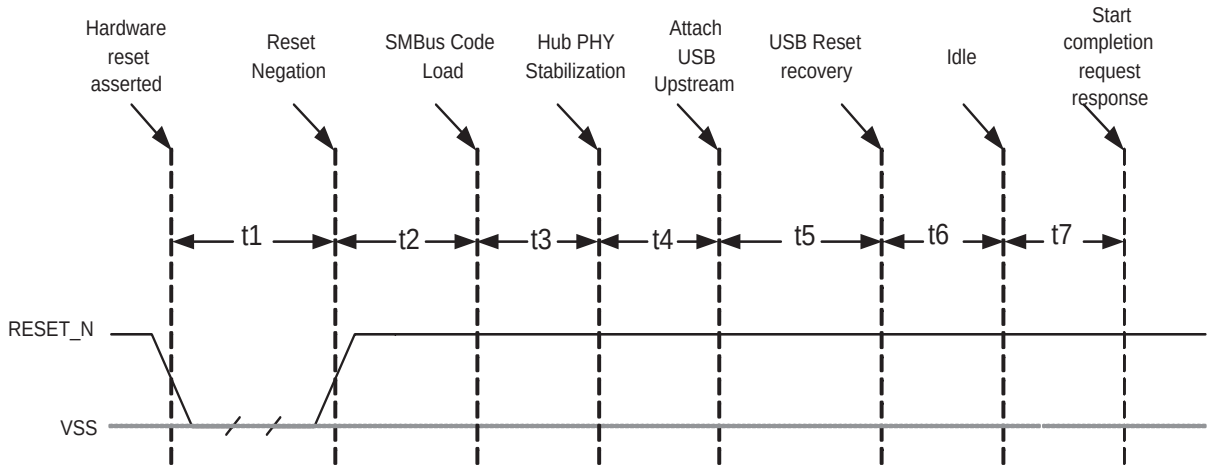

Figure 4.6 Reset_N Timing for SMBus Mode

Table 4.5 Reset_N Timing for SMBus Mode

NAME	DESCRIPTION	MIN	TYP	MAX	UNITS
t1	RESET_N Asserted.	1			µsec
t2	Hub Recovery/Stabilization.			500	µsec
t3	SMBus Code Load (See Note).		250	300	msec
t4	Hub Configuration and USB Attach.			100	msec
t5	Host acknowledges attach and signals USB Reset.	100			msec
t6	USB Idle.		Undefined		msec
t7	Completion time for requests (with or without data stage).			5	msec

Notes:

- For Bus-Powered configurations, the 99.5ms (MAX) is required, and the Hub and its associated circuitry must not consume more than 100mA from the upstream USB power source during t2+t3+t4+t5+t6+t7. For Self-Powered configurations, t3 MAX is not applicable and the time to load the configuration is determined by the external SMBus host.
- All Power Supplies must have reached the operating levels mandated in Chapter 5, DC Parameters, prior to (or coincident with) the assertion of RESET_N.

4.7.3 USB Bus Reset

In response to the upstream port signaling a reset to the Hub, the Hub does the following:

Note: The Hub does not propagate the upstream USB reset to downstream devices.

1. Sets default address to 0.
2. Sets configuration to: Unconfigured.
3. Negates PRTPWR[4:1] to all downstream ports.
4. Clears all TT buffers.

5. Moves device from suspended to active (if suspended).
6. Complies with Section 11.10 of the USB 2.0 Specification for behavior after completion of the reset sequence.

The Host then configures the Hub and the Hub's downstream port devices in accordance with the USB Specification.

Chapter 5 DC Parameters

5.1 Maximum Guaranteed Ratings

PARAMETER	SYMBOL	MIN	MAX	UNITS	COMMENTS
Storage Temperature	T_A	-55	150	°C	
Lead Temperature			325	°C	Soldering < 10 seconds
1.8V supply voltage	$V_{DDA18PLL}$, V_{DD18}		2.5	V	
3.3V supply voltage	V_{DDA33}, $V_{DD33PLL}$, V_{DD33}, V_{DD33CR}		4.6	V	
Voltage on any I/O pin		-0.5	5.5	V	
Voltage on XTAL1		-0.5	4.0	V	
Voltage on XTAL2		-0.5	3.6	V	

Note: Stresses above the specified parameters could cause permanent damage to the device. This is a stress rating only and functional operation of the device at any condition above those indicated in the operation sections of this specification is not implied. When powering this device from laboratory or system power supplies, it is important that the Absolute Maximum Ratings not be exceeded or device failure can result. Some power supplies exhibit voltage spikes on their outputs when the AC power is switched on or off. In addition, voltage transients on the AC power line may appear on the DC output. When this possibility exists, it is suggested that a clamp circuit be used.

5.2 Recommended Operating Conditions

PARAMETER	SYMBOL	MIN	MAX	UNITS	COMMENTS
Operating Temperature	T_A	0	70	°C	
1.8V supply voltage	$V_{DDA18PLL}$ V_{DD18}	1.62	1.98	V	
3.3V supply voltage	V_{DDA33} $V_{DDA33PLL}$ V_{DD33} V_{DD33CR}	3.0	3.6	V	
Voltage on any I/O pin		-0.3	5.5	V	If any 3.3V supply voltage drops below 3.0V, then the MAX becomes: (3.3V supply voltage) + 0.5

PARAMETER	SYMBOL	MIN	MAX	UNITS	COMMENTS
Voltage on XTAL1		-0.3	V_{DDA33}	V	
Voltage on XTAL2		-0.3	V_{DD18}	V	

Table 5.1 DC Electrical Characteristics

PARAMETER	SYMBOL	MIN	TYP	MAX	UNITS	COMMENTS
I, IS Type Input Buffer						
Low Input Level	V_{ILI}			0.8	V	TTL Levels
High Input Level	V_{IHI}	2.0			V	
Input Leakage	I_{IL}	-10		+10	uA	V_{IN} = 0 to V_{DD33}
Hysteresis (‘IS’ Only)	V_{HYSI}	250		350	mV	
Input Buffer with Pull-Up (IPU)						
Low Input Level	V_{ILI}			0.8	V	TTL Levels
High Input Level	V_{IHI}	2.0			V	
Low Input Leakage	I_{ILL}	+35		+90	uA	V_{IN} = 0
High Input Leakage	I_{IHL}	-10		+10	uA	V_{IN} = V_{DD33}
Input Buffer with Pull-Down (IPD)						
Low Input Level	V_{ILI}			0.8	V	TTL Levels
High Input Level	V_{IHI}	2.0			V	
Low Input Leakage	I_{ILL}	+10		-10	uA	V_{IN} = 0
High Input Leakage	I_{IHL}	-35		-90	uA	V_{IN} = V_{DD33}
ICLK Input Buffer						
Low Input Level	V_{ILCK}			0.5	V	
High Input Level	V_{IHCK}	1.4			V	
Input Leakage	I_{IL}	-10		+10	uA	V_{IN} = 0 to V_{DD33}
O12, I/O12 &I/OSD12 Type Buffer						
Low Output Level	V_{OL}			0.4	V	I_{OL} = 12mA @ V_{DD33} = 3.3V
High Output Level	V_{OH}	2.4			V	I_{OH} = -12mA @ V_{DD33} = 3.3V
Output Leakage	I_{OL}	-10		+10	uA	V_{IN} = 0 to V_{DD33} (Note 5.1)
Hysteresis (‘SD’ pad only)	V_{HYSC}	250		350	mV	

Table 5.1 DC Electrical Characteristics (continued)

PARAMETER	SYMBOL	MIN	TYP	MAX	UNITS	COMMENTS
IO-U (Note 5.2)						
Supply Current Unconfigured High-Speed Host Full-Speed Host	 $I_{CCINTHS}$ $I_{CCINITFS}$		 95 80	 105 90	 mA mA	
Supply Current Configured (High-Speed Host) 1 Port HS, 1 Port LS/FS 2 Ports @ LS/FS 2 Ports @ HS 3 Ports @ HS 4 Ports @ HS	 I_{HCH1C1} I_{HCC2} I_{HCH2} I_{HCH3} I_{HCH4}		 150 150 160 170 175	 170 160 275 290 305	 mA mA mA mA mA	All supplies combined
Supply Current Configured (Full-Speed Host) 1 Port 2 Ports 3 Ports 4 Ports	 I_{FCC1} I_{FCC2} I_{FCC3} I_{FCC4}		 140 140 140 140	 150 150 150 150	 mA mA mA mA	All supplies combined
Supply Current Suspend	I_{CSBY}		310	420	µA	All supplies combined
Supply Current Reset	I_{CRST}		100	275	µA	All supplies combined

Note 5.1 Output leakage is measured with the current pins in high impedance.

Note 5.2 See USB 2.0 Specification for USB DC electrical characteristics.

CAPACITANCE T_A = 25°C; fc = 1MHz; V_{DD18}, V_{DDPLL} = 1.8*V*

Table 5.2 Pin Capacitance

PARAMETER	SYMBOL	LIMITS			UNIT	TEST CONDITION
		MIN	TYP	MAX		
Clock Input Capacitance	C_{IN}			2	pF	All pins except USB pins (and pins under test tied to AC ground)
Input Capacitance	C_{IN}			10	pF	
Output Capacitance	C_{OUT}			20	pF	

Chapter 6 AC Specifications

6.1 Oscillator/Clock

Crystal: Parallel Resonant, Fundamental Mode, 24 MHz ±100ppm.

External Clock: 50% Duty cycle ± 10%, 24/48 MHz ± 100ppm, Jitter < 100ps rms.

6.1.1 SMBus Interface:

The SMSC Hub conforms to all voltage, power, and timing characteristics and specifications as set forth in the SMBus 1.0 Specification for Slave-Only devices (except as noted in Section 4.4, "SMBus Slave Interface").

6.1.2 I2C EEPROM:

Frequency is fixed at 58.6KHz ± 20%.

6.1.3 USB 2.0

The SMSC Hub conforms to all voltage, power, and timing characteristics and specifications as set forth in the USB 2.0 Specification. Please refer to the USB 2.0 Specification for more information.

Chapter 7 Package Outlines

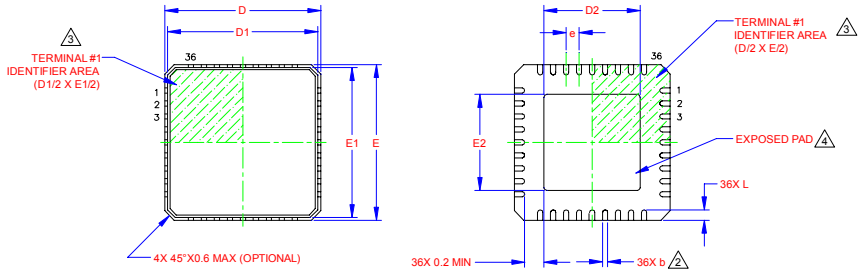

TOP VIEW

BOTTOM VIEW

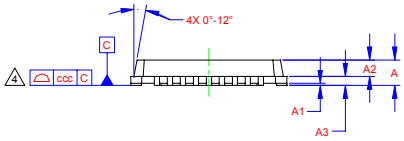

SIDE VIEW

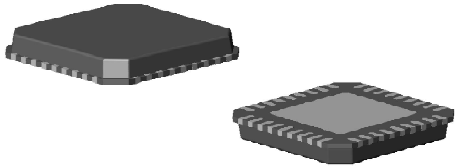

3-D VIEWS

REVISION HISTORY			
REVISION	DESCRIPTION	DATE	RELEASED BY
A	INITIAL RELEASE	6/13/03	S.K.ILIEV
B	ADDED "PRELIMINARY" NOTE	11/6/03	S.K.ILIEV
C	DELETED "PRELIMINARY" NOTE	6/30/04	S.K.ILIEV
D	NEW SMSC DRAWING FORMAT & ADDING 3-D VIEW	12/7/04	S.K.ILIEV
E	L(MIN) FROM 0.35 TO 0.50, D2/E2 FROM 1.75 - 4.25 TO 3.55-3.70-3.85	4/5/05	S.K.ILIEV
F	ADDED PARAGRAPHS 1 TO 6 IN MAIN SPEC BODY & DWG AS ATTACHMENT	7/11/05	S.K.ILIEV

COMMON DIMENSIONS					
SYMBOL	MIN	NOM	MAX	NOTE	REMARK
A	0.80	–	1.00	–	OVERALL PKG HEIGHT
A1	0	0.02	0.05	–	STANDOFF
A2	0.60	–	0.80	–	MOLD THICKNESS
A3	0.20 REF			–	LEAD FRAME THICKNESS
D/E	5.85	6.00	6.15	–	"X"/"Y" BODY SIZE
D1/E1	5.55	–	5.95	–	"X"/"Y" MOLD SIZE
D2/E2	SEE VARIATIONS			–	"X"/"Y" EXPOSED PAD SIZE
L	0.50	–	0.75	–	TERMINAL LENGTH
b	0.18	0.25	0.30	2	TERMINAL WIDTH
e	0.50 BSC			–	TERMINAL PITCH
ccc	–	–	0.08	4	COPLANARITY

D2 / E2 VARIATIONS				
MIN	NOM	MAX	NOTE	CATALOG PART
3.55	3.70	3.85	–	USB3280, USB2502
				EMC6W201
				SIO1036

NOTES:
1. ALL DIMENSIONS ARE IN MILLIMETER.
2. POSITION TOLERANCE OF EACH TERMINAL IS ± 0.05mm AT MAXIMUM MATERIAL CONDITION. DIMENSIONS "b" APPLIES TO PLATED TERMINALS AND IT IS MEASURED BETWEEN 0.15 AND 0.30 mm FROM THE TERMINAL TIP.
3. DETAILS OF TERMINAL #1 IDENTIFIER ARE OPTIONAL BUT MUST BE LOCATED WITHIN THE AREA INDICATED.
4. COPLANARITY ZONE APPLIES TO EXPOSED PAD AND TERMINALS.

UNLESS OTHERWISE SPECIFIED DIMENSIONS ARE IN MILLIMETERS AND TOLERANCES ARE:
DECIMAL X.X ±0.1, X.XX ±0.05, X.XXX ±0.025; ANGULAR ±1°
DIM AND TOL PER ASME Y14.5M - 1994

THIRD ANGLE PROJECTION

	NAME	DATE
MATERIAL -		
DRAWN	S.K.ILIEV	12/6/04
FINISH -	CHECKED S.K.ILIEV	12/6/04
PRINT WITH "SCALE TO FIT" DO NOT SCALE DRAWING	APPROVED S.K.ILIEV	12/6/04

80 ARKAY DRIVE
HAUPPAUGE, NY 11788
USA

SMSC SUCCESS BY DESIGN

TITLE: PACKAGE OUTLINE
36 TERMINAL QFN, 6x6mm BODY, 0.5mm PITCH

DWG NUMBER: MO-36-QFN-6x6 | REV: F
SCALE: 1:1 | STD COMPLIANCE: JEDEC: MO-220 | SHEET: 1 OF 1

Figure 7.1 36-Pin QFN, 6x6mm Body, 0.5mm Pitch

REVISION HISTORY			
REVISION	DESCRIPTION	DATE	RELEASED BY
A	INITIAL RELEASE	7/16/04	S.K.ILIEV
B	DELETE THE "PRELIMINARY" SIGN	11/30/04	S.K.ILIEV
C	3-D VIEW ADDED. D2/E2 WAS 1.25-5.80 NOW - SEE TABLE. L(MAX) WAS 0.75 NOW IS 0.50	7/14/05	S.K.ILIEV
D	PCB FOOTPRINT AND EMC4001 IN D2/E2 TABLE ADDED	2/23/06	S.K.ILIEV

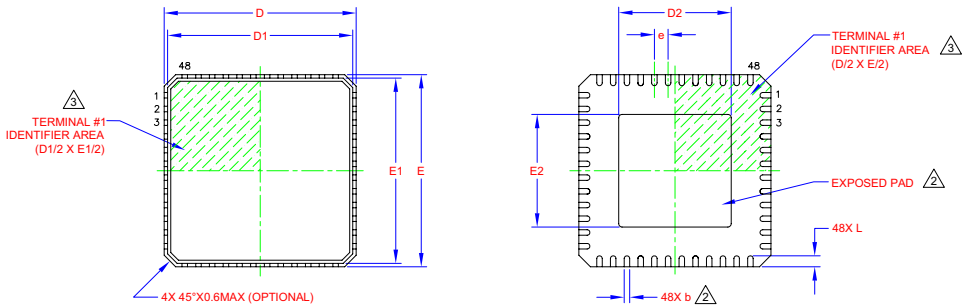

TOP VIEW

BOTTOM VIEW

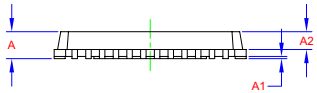

SIDE VIEW

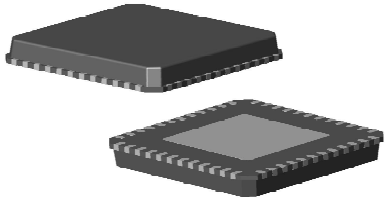

3-D VIEWS

D2/E2 VARIATIONS				
MIN	NOM	MAX	NOTE	CATALOG PART #
3.95	4.10	4.25	2	USB2503, USB2503A & EMC4001

COMMON DIMENSIONS					
SYMBOL	MIN	NOM	MAX	NOTE	REMARK
A	0.70	-	1.00	-	OVERALL PACKAGE HEIGHT
A1	0	0.02	0.05	-	STANDOFF
A2	-	-	0.90	-	MOLD CAP THICKNESS
D/E	6.85	7.00	7.15	-	X/Y BODY SIZE
D1/E1	6.55	-	6.95	-	X/Y MOLD CAP SIZE
D2/E2	SEE VARIATIONS			2	X/Y EXPOSED PAD SIZE
L	0.30	-	0.50	-	TERMINAL LENGTH
b	0.18	0.25	0.30	2	TERMINAL WIDTH
e	0.50 BSC			-	TERMINAL PITCH

NOTES:
1. ALL DIMENSIONS ARE IN MILLIMETER.
2. POSITION TOLERANCE OF EACH TERMINAL AND EXPOSED PAD IS ± 0.05mm AT MAXIMUM MATERIAL CONDITION. DIMENSIONS "b" APPLIES TO PLATED TERMINALS AND IT IS MEASURED BETWEEN 0.15 AND 0.30 mm FROM THE TERMINAL TIP.
3. DETAILS OF TERMINAL #1 IDENTIFIER ARE OPTIONAL BUT MUST BE LOCATED WITHIN THE AREA INDICATED.

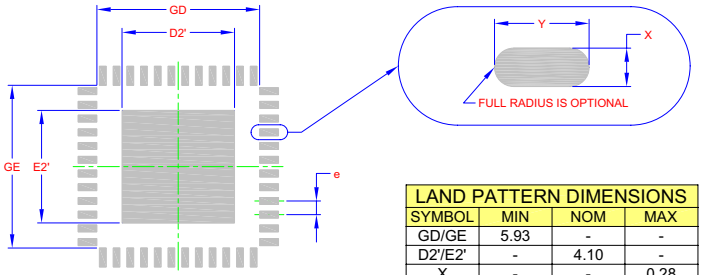

THE USER MAY MODIFY THE PCB LAND PATTERN DIMENSIONS BASED ON THEIR EXPERIENCE AND/OR PROCESS CAPABILITY

LAND PATTERN DIMENSIONS			
SYMBOL	MIN	NOM	MAX
GD/GE	5.93	-	-
D2'/E2'	-	4.10	-
X	-	-	0.28
Y	-	-	0.69
e		0.50	

RECOMMENDED PCB LAND PATTERN

UNLESS OTHERWISE SPECIFIED DIMENSIONS ARE IN MILLIMETERS AND TOLERANCES ARE:
DECIMAL X.X ±0.1, X.XX ±0.05, X.XXX ±0.025
ANGULAR ±1°
INTERPRET DIM AND TOL PER ASME Y14.5M - 1994

THIRD ANGLE PROJECTION

80 ARKAY DRIVE
HAUPPAUGE, NY 11788, USA
www.smsc.com

SMSC SUCCESS BY DESIGN

	NAME	DATE
MATERIAL: IC PLASTIC PKG	DRAWN: S.K.ILIEV	6/15/04
FINISH: -	CHECKED: S.K.ILIEV	7/14/04
PRINT WITH "SCALE TO FIT" DO NOT SCALE DRAWING	APPROVED: S.K.ILIEV	7/16/04

TITLE: PACKAGE OUTLINE 48 TERMINAL QFN, 7x7mm BODY, 0.5mm PITCH

DWG NUMBER: MO-48QFN-7x7 REV: D

SCALE: 1:1 STD COMPLIANCE: JEDEC: MO-220 SHEET: 1 OF 1

Figure 7.2 48-Pin QFN, 7x7mm Body, 0.5mm Pitch