

USB UART click™

1. Introduction

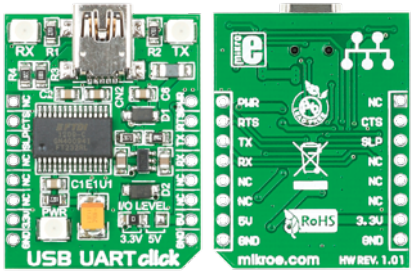

USB UART Click™ is an accessory board in **mikroBUS™** form factor. It's a compact and easy solution for adding serial UART communication via USB cable. It features **FT232RL** USB-to-UART interface module as well as USB MINI B connector. USB UART Click™ communicates with target board via UART interface. The board is designed to use 3.3V or 5V I/O level. It has a LED diode (GREEN) that indicates the presence of power supply.

2. Soldering the headers

Before using your click board™, make sure to solder 1x8 male headers to both left and right side of the board. Two 1x8 male headers are included with the board in the package.



1

2

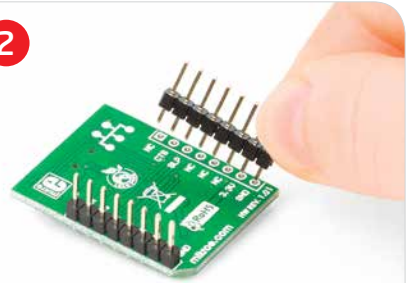

Turn the board upside down so that bottom side is facing you upwards. Place shorter parts of the header pins in both soldering pad locations.

3



Turn the board upward again. Make sure to align the headers so that they are perpendicular to the board, then solder the pins carefully.

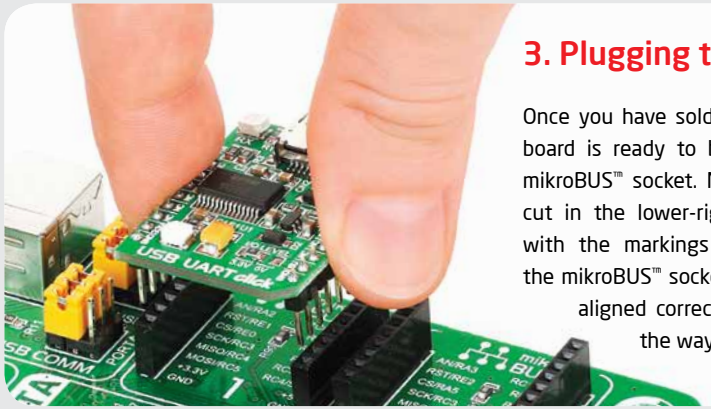

3. Plugging the board in

Once you have soldered the headers your board is ready to be placed into desired mikroBUS™ socket. Make sure to align the cut in the lower-right part of the board with the markings on the silkscreen at the mikroBUS™ socket. If all of the pins are aligned correctly, push the board all the way into the socket.

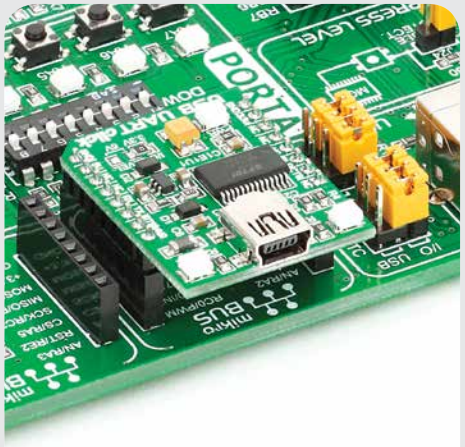

4. Essential features

USB UART Click™ with it's **FT232RL** IC gives additional serial UART communication via USB cable. The **FT232RL** contains integrated 1024 bit EEPROM, 128 bytes long receive buffer, 256 bytes long transmit buffer, configurable CBUS I/0 pins and entire USB protocol handled on the chip. The board contains RX and TX LED diodes that indicate the transmit and receive data via USB.

click™
BOARD
www.mikroe.com

USB UART click Manual
ver. 1.01
0 100000 021231

5. USB UART Click™ Board Schematic

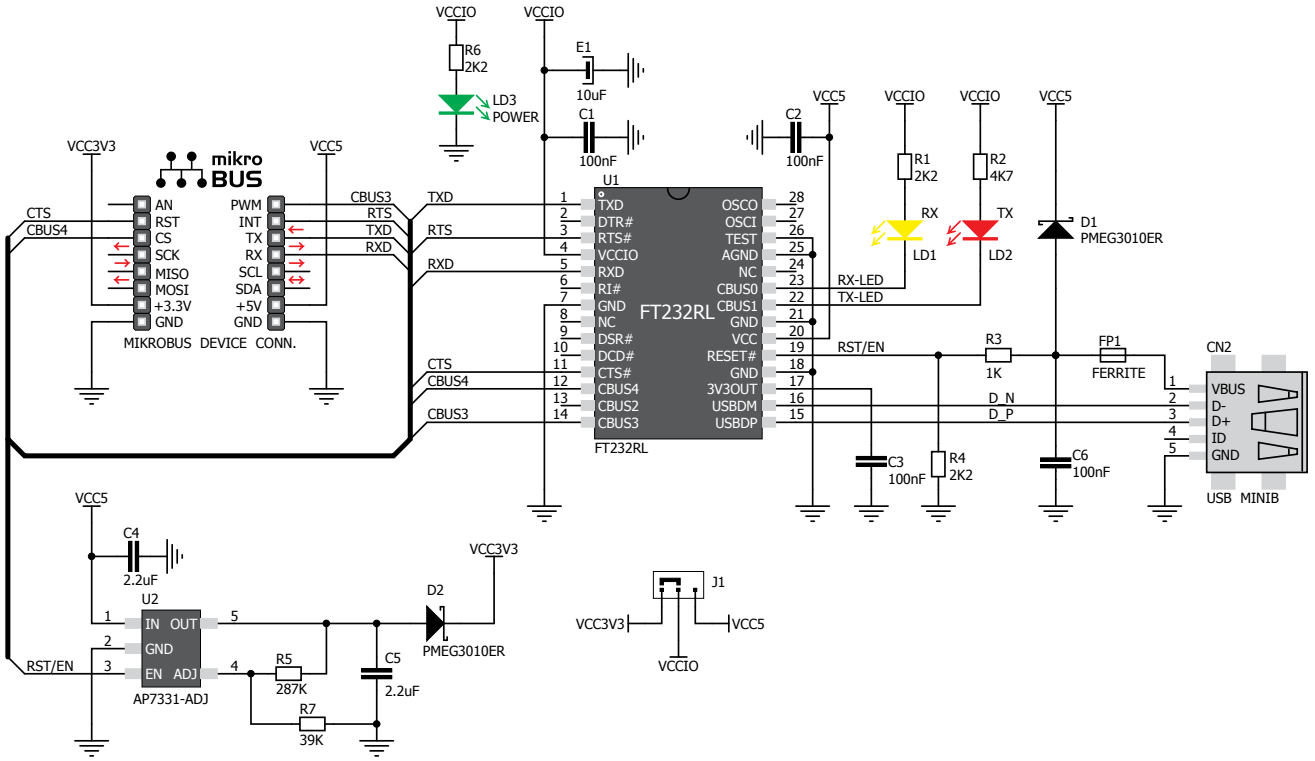

6. SMD Jumper

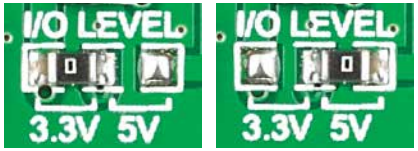

There is one zero-ohm SMD jumper **J1** which is used to select whether 3.3V or 5V I/O level is used. Jumper **J1** is soldered in 3.3V position by default.

7. Code Examples

Once you have done all the necessary preparations, it's time to get your click board up and running. We have provided the examples for mikroC, mikroBasic and mikroPascal compilers on our **Libstock** website. Just download them and you are ready to start.

LIBSTOCK.com

8. Support

MikroElektronika offers **Free Tech Support (www.mikroe.com/esupport)** until the end of product lifetime, so if something goes wrong, we are ready and willing to help!

MikroElektronika
DEVELOPMENT TOOLS | COMPILERS | BOOKS

MikroElektronika assumes no responsibility or liability for any errors or inaccuracies that may appear in the present document.
Specification and information contained in the present schematic are subject to change at any time without notice. Copyright © 2012 MikroElektronika. All rights reserved.