100mΩ, 1/1.5A HIGH-SIDE POWER SWITCHES WITH FLAG

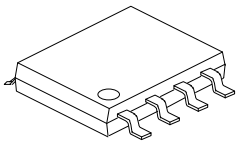

SOP-8

■ DESCRIPTION

The UTC **US204** series are 100mΩ high-side power switches. There are internal duel low voltage N-Channel MOSFETS which whish is ideal all USB applications. These MOSFETS is driven by a charge pump circuitry inside, these switches on resistance are as low as 100mΩ which and meet the drop voltage for USB applications.

The flag pins output an open-drain fault flag to next controller.

There're lots internal special ways for protecting the chip's operation. There are also built-in protection circnits to ensure the chips function normally.

When in hot-plug events, there's large current which can create the upstream voltage droop to match the USB's voltage droop requirements and soft-start for isolating the power source.

As soon as the die temperature is higher than 130℃, the internal shutdown circuit will work.

Only when there's a normal input voltage in the V_{IN} pin, the UVLO (under-voltage lockout, 2.1V typ.) can make sure the chip is in the off state.

Because of the requirement of USB power, the fault current should be ensured to be less than 1.5A for UTC **US204AH/AL** and 1.0A for UTC **US204CH/CL**.

■ FEATURES

* 100mΩ(Typ) N-Channel MOSFET
* Supply Current:
  – Switch On : 60μA (Typ)
  – Switch Off : 1μA (Typ)
* Load Current 1.5A for US204AH/AL and 1.0A for US204CH/CL
* Input Voltage from 2V ~ 5.5V
* In Off-State: Output Voltage can be Higher than Input

■ RDERING INFORMATION

Ordering Number		Package	Packing
Lead Free	Halogen Free		
US204XXL-S08-R	US204XXG-S08-R	SOP-8	Tape Reel

US204XXL-S08-R
- (1)Packing Type
- (2)Package Type
- (3)Lead Free
- (4)Output Current / EN Function

(1) R: Tape Reel
(2) S08: SOP-8
(3) G: Halogen Free, L: Lead Free
(4) AH: 1.5A/Active High, AL: 1.5A/Active Low, CH: 1A/Active High, CL: 1A/Active Low

Copyright © 2011 Unisonic Technologies Co., Ltd

■ PIN CONFIGURATION

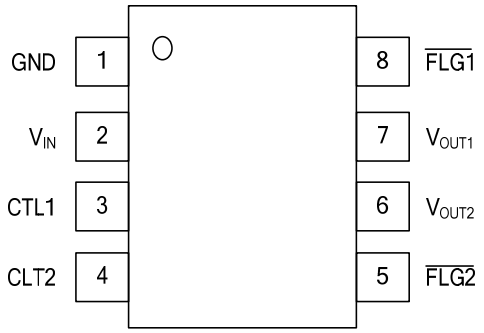

■ PIN DESCRIPTION

PIN NO	PIN NAME	DESCRIPTION
1	GND	Ground
2	V_{IN}	Power input voltage
3	CTL1	Chip Enable turns on power switch in V_{OUT1}.
4	CTL2	Chip Enable turns on power switch in V_{OUT2}.
5	$\overline{FLG2}$	Over current or over temperature status output, open-drain output, active low, in V_{OUT2}.
6	V_{OUT2}	Power-Switch Output, in V_{OUT2}.
7	V_{OUT1}	Power-Switch Output, in V_{OUT1}.
8	$\overline{FLG1}$	Over current or over temperature status output,, open-drain output, active low, in V_{OUT1}.

■ BLOCK DIAGRAM

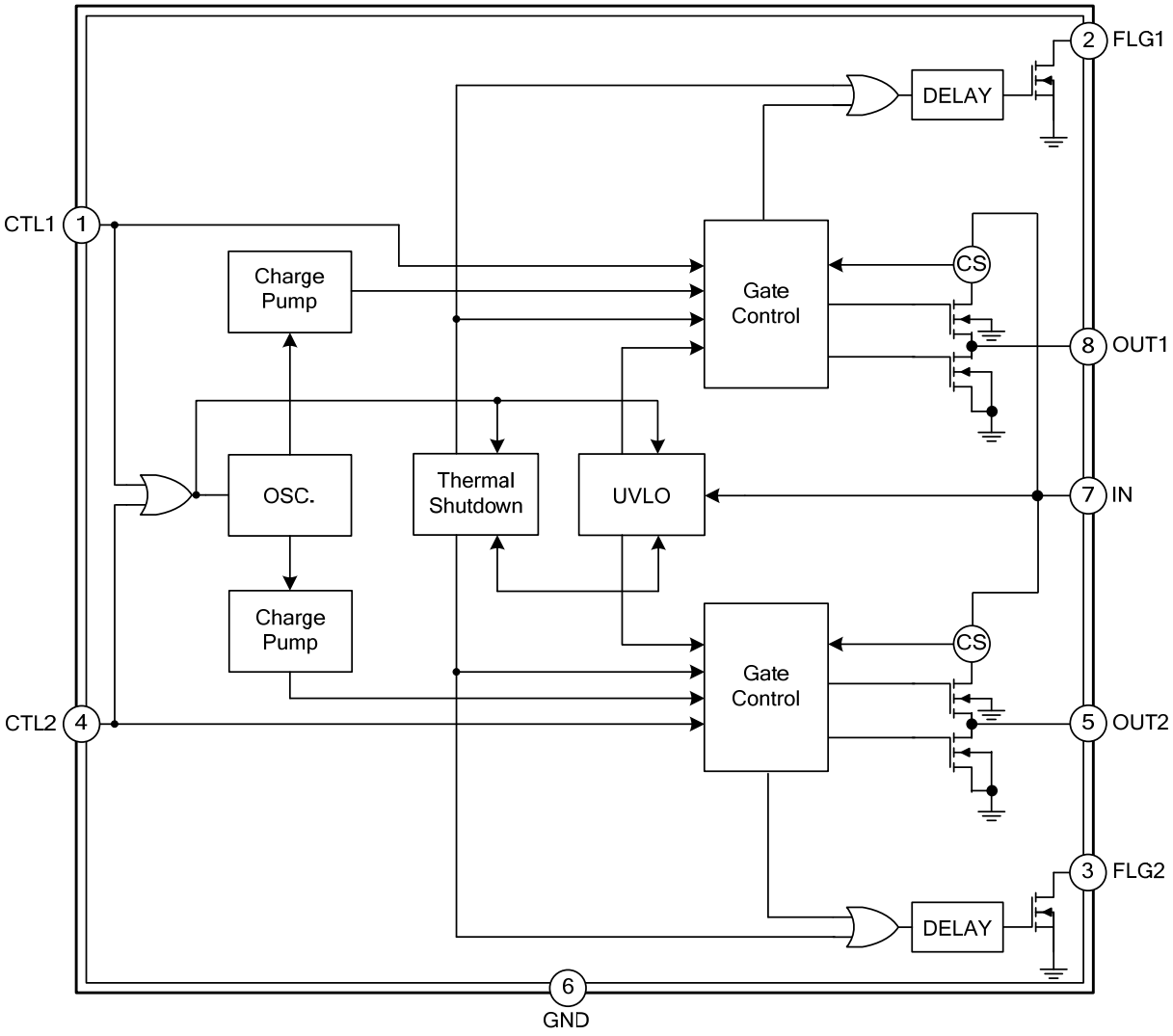

■ ABSOLUTE MAXIMUM RATING(Ta=25°C, unless otherwise specified)

PARAMETER		SYMBOL	RATINGS	UNIT
Supply Voltage		V_{CC}	6.0	V
			+2 ~ +5.5 (Note 2)	V
Input/Output Pins	CTL	V_{CTL}	-0.3~ +6.0	V
			0 ~ +5.5 (Note 2)	V
	$\overline{FLG}$	$V_{\overline{FLG}}$	6.0	V
Power Dissipation (Ta=25°C)		P_D	0.3	W
Junction Temperature		T_J	150	℃
			-20 ~ +100 (Note 2)	℃
Storage Temperature		T_{STG}	-65 ~ +150	℃

Notes:1. Absolute maximum ratings are those values beyond which the device could be permanently damaged. Absolute maximum ratings are stress ratings only and functional device operation is not implied.
2. The device is not guaranteed to function when it's beyond its operating conditions.

■ ELECTRICAL CHARACTERISTICS

PARAMETER		SYMBOL	TEST CONDITIONS	MIN	TYP	MAX	UNIT
ENABLE INPUT							
CTL Threshold	Low	V_{IL}	V_{IN}=2V~5.5V, Switch OFF			0.8	V
	High	V_{IH}	V_{IN}=2V~5.5V, Switch ON	2.0			V
CTL Input Current		$I_{I(CTL)}$	V_{CTL}=0V~5.5V		0.01		μA
UNDER VOLTAGE LOCK							
Under-Voltage Lockout		V_{UVLO}	V_{IN} increasing		2.1		V
Under-Voltage Hysteresis		ΔV_{UVLO}	V_{IN} decreasing		0.1		V
SUPPLY CURRENT							
Supply Current		$I_{SW(ON)}$	Switch on, V_{OUT}=OPEN		65	90	μA
		$I_{SW(OFF)}$	Switch off, V_{OUT}=OPEN		0.1	1	μA
Output Leakage Current		$I_{O(LEAK)}$	V_{CTL}=0V, R_{LOAD}=0Ω		0.5	1	μA
CURRENT LIMIT							
Current Limit	US204Ax	I_{LIMIT}	V_{OUTX}=4V	1.5	2.0	2.8	A
	US204Cx			1.1	1.5	2.1	A
Short Circuit Fold-Back Current	US204Ax	$I_{SC(FB)}$	V_{OUT}=0V, measured prior to thermal shutdown		1.4		A
	US204Cx				1.0		A
POWER SWITCH							
Switch ON Resistance	US204Ax	$R_{DS(ON)}$	I_{OUT}=1.3A, V_{IN}=5V,Each Channel		100	110	mΩ
	US204Cx		I_{OUT}= 1A, V_{IN}=5V,Each Channel		100	110	mΩ
Output Turn-ON Rise Time		$t_{ON(RISE)}$	10% ~ 90% of V_{OUT} rising		400		μs
OVER CURRENT FLAG							
FLAG OFF Current		$I_{\overline{FLG}(OFF)}$	$V_{\overline{FLG}}$ =5V		0.01	1	μA
FLAG Output Resistance		$R_{\overline{FLG}}$	I_{SINK}=1mA		20	400	Ω
FLAG Delay Time		t_D	From fault condition to $\overline{FLG}$ assertion	5	12	15	ms
THERMAL SHUTDOWN							
Thermal Shutdown Protection		T_{SD}			130		℃
Thermal Shutdown Hysteresis		ΔT_{SD}			20		℃

■ TEST CIRCUIT

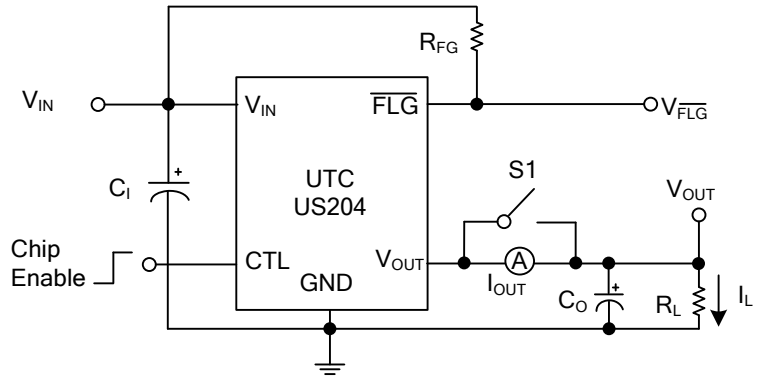

Turn-On & Off Response, Flag Response

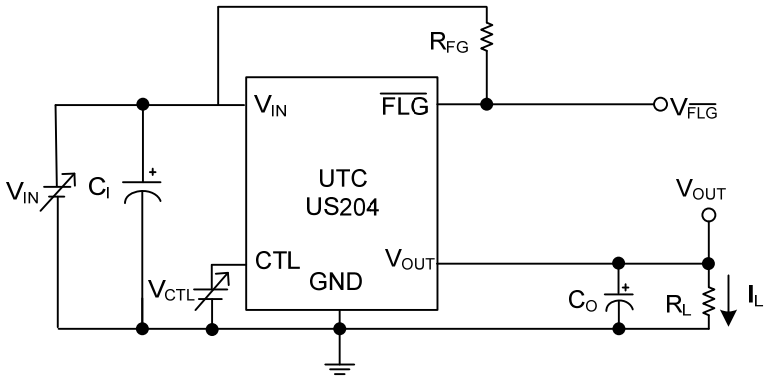

UVLO at Rising & Falling

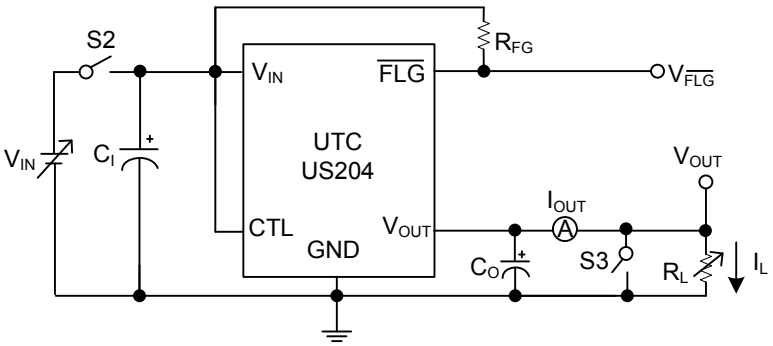

Current Limit vs. Input Voltage, Inrush Current Response,
Current Limit Transient Response

■ TYPICAL APPLICATION CIRCUIT

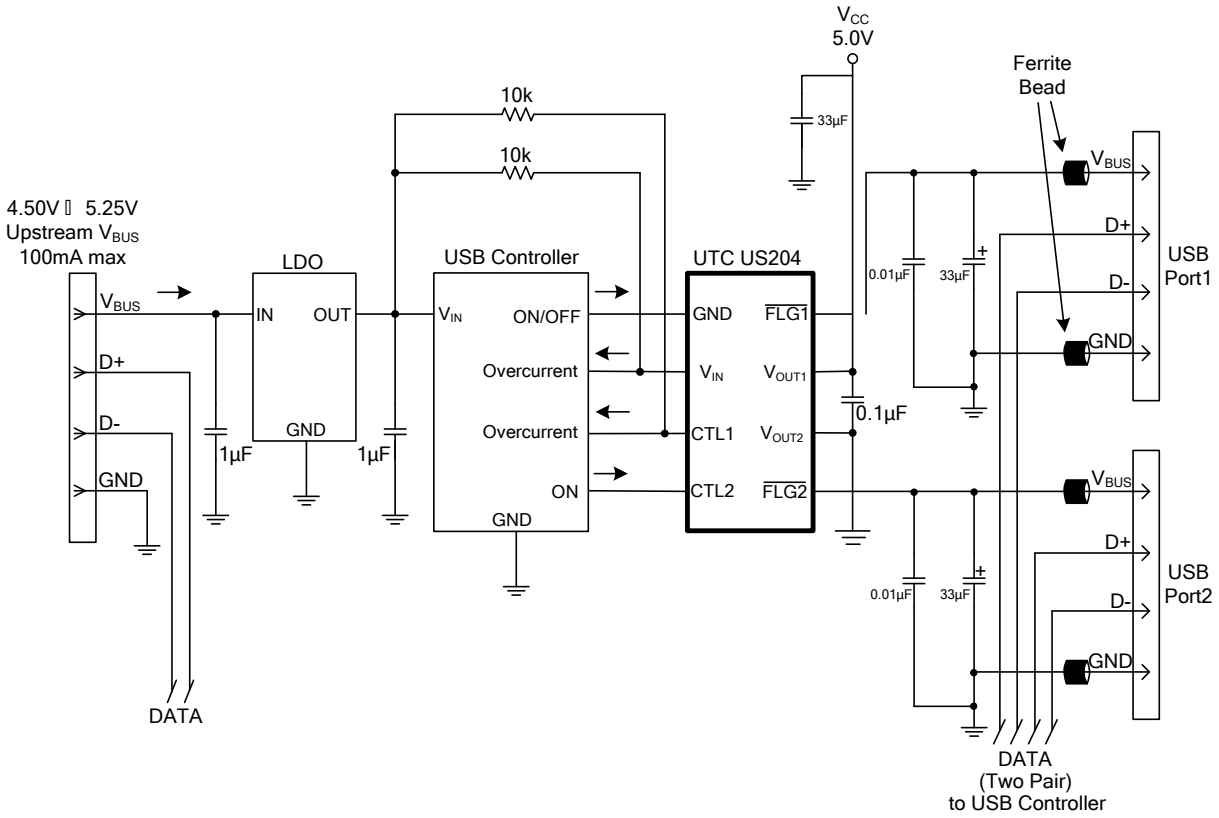

UTC assumes no responsibility for equipment failures that result from using products at values that exceed, even momentarily, rated values (such as maximum ratings, operating condition ranges, or other parameters) listed in products specifications of any and all UTC products described or contained herein. UTC products are not designed for use in life support appliances, devices or systems where malfunction of these products can be reasonably expected to result in personal injury. Reproduction in whole or in part is prohibited without the prior written consent of the copyright owner. The information presented in this document does not form part of any quotation or contract, is believed to be accurate and reliable and may be changed without notice.