Microsemi
WATERTOWN DIVISION

# UPR60

## ULTRA FAST RECTIFIER

## DESCRIPTION

Microsemi's Powermite SMT package offers high efficiency ultra fast rectifiers with the power handling capabilities previously found only in much larger packages. They are ideal for SMD applications that operate at high frequencies.

The Powermite package's full metallic bottom eliminates the possibility of solder flux entrapment during assembly, and its unique locking tab acts as an integral heat sink. Its innovative design makes this device ideal for use with automatic insertion equipment.

POWERMITE PACKAGE
HIGH EFFICIENCY, 2A, 30ns

**IMPORTANT:** For the most current data, consult *MICROSEMI*'s website: **http://www.microsemi.com**

## KEY FEATURES

- High Power Surface Mount Package
- Ultra-fast Recovery Time (30ns)
- Low Forward Voltage
- Compatible with Automatic Insertion Equipment
- Full Metallic Bottom Eliminates Flux Entrapment
- Integral Heat / Sink/Locking Tabs

## APPLICATIONS/BENEFITS

- Switching and Regulating Power Supplies
- Charge Pump Circuits
- Reduces reverse recovery loss due to low IRM
- Replaces wire bonded die with a flip chip package

## ABSOLUTE MAXIMUM RATINGS

| | |
|---|---|
| Maximum Reverse Voltage | 600V |
| Average Power Dissipation @ $T_{Tab}$ = 75ºC | 2.5W* |
| Thermal Resistance Junction to Tab | 30º C/W |
| Thermal Resistance Junction to Bottom | 10º C/W |
| Non-Repetitive Sinusoidal Surge Current (8.3mS) | 20A |
| Operating and Storage Temperature | -55º to + 150º C |
| | |
| * WHEN MOUNTED ON A PC BOARD WITH 2 OZ. COPPER. | |

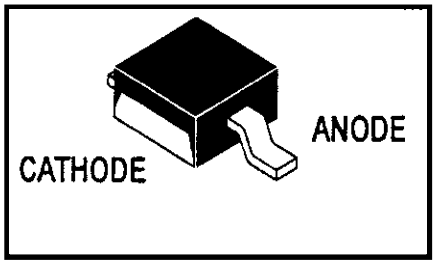


## SPICE MODEL UPR60
## SURFACE MOUNT RECTIFIER

.MODEL UPR60 D(IS = 1.88N N = 1.6 RS = 0.133 IKF = 2.37M
+ XTI = 3 EG = 1.11 Cjo = 25p M = .41 Vj = .424 Fc = 0.5
+ Isr = 10n Nr = 2.135 Bv = 600 Ibv = 300n Tt = 62n

## ELECTRICAL SPECIFICATIONS

| Test | Min | Typ | Max | Units | Conditions |
|---|---|---|---|---|---|
| Forward Voltage $V_f$ | | | 1.6 | V | $I_f$ = 2 A, $T_A$ = 25ºC |
| | | | 1.4 | V | $I_f$ = 1.2 A, $T_A$ = 25ºC |
| Reverse Current $I_R$ | | | 1 | µA | $V_R$ = 600V, $T_A$ = 25ºC |
| | | | 100 | µA | $V_R$ = 600V, $T_A$ = 125ºC |
| Reverse Recovery Time $T_{rr}$ | | | 30 | ns | IF = 0.5A, IR = 1.0A, IREC = 0.25A, $T_A$ = 25ºC |

Copyright © 2000


**Microsemi**
Watertown Division
580 Pleasant Street Watertown, MA 02472 617-926-0404, Fax: 617-924-1235

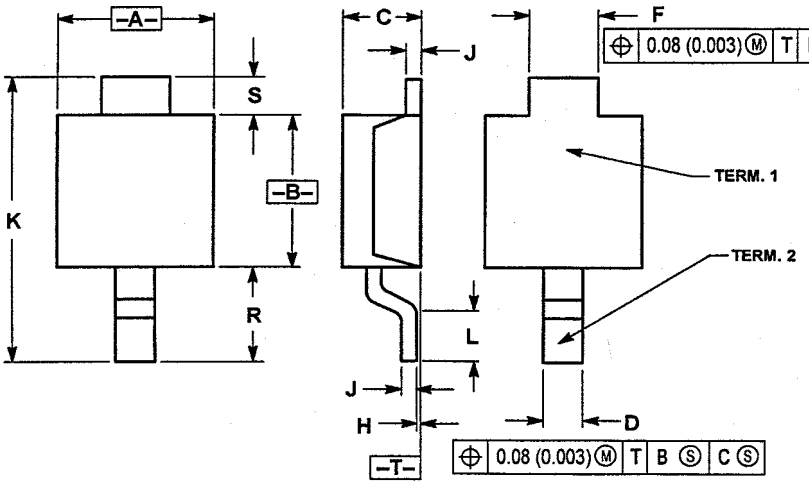


CASE 457–03
ISSUE B

NOTES:
1. DIMENSIONING AND TOLERANCING PER ANSI Y14.5M, 1982.
2. CONTROLLING DIMENSION: MILLIMETER.
3. DIMENSION A DOES NOT INCLUDE MOLD FLASH, PROTRUSIONS OR GATE BURRS. MOLD FLASH, PROTRUSIONS OR GATE BURRS SHALL NOT EXCEED 0.15 (0.006) PER SIDE.

| | MILLIMETERS | | INCHES | |
|---|---|---|---|---|
| DIM | MIN | MAX | MIN | MAX |
| A | 1.75 | 2.05 | 0.069 | 0.081 |
| B | 1.75 | 2.15 | 0.069 | 0.086 |
| C | 0.85 | 1.15 | 0.033 | 0.045 |
| D | 0.40 | 0.65 | 0.016 | 0.026 |
| F | 0.70 | 1.00 | 0.028 | 0.039 |
| H | –0.05 | +0.10 | –0.002 | +0.004 |
| J | 0.10 | 0.25 | 0.004 | 0.010 |
| K | 3.60 | 3.90 | 0.142 | 0.154 |
| L | 0.50 | 0.80 | 0.020 | 0.031 |
| R | 1.10 | 1.50 | 0.043 | 0.059 |
| S | 0.25 | 0.85 | 0.010 | 0.033 |



Copyright © 2000


Microsemi
Watertown Division
580 Pleasant Street Watertown, MA 02472 617-926-0404, Fax: 617-924-1235

UPR60
TYPICAL

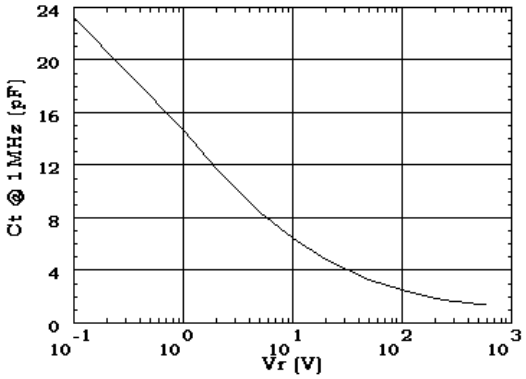


UPR60
MEAN

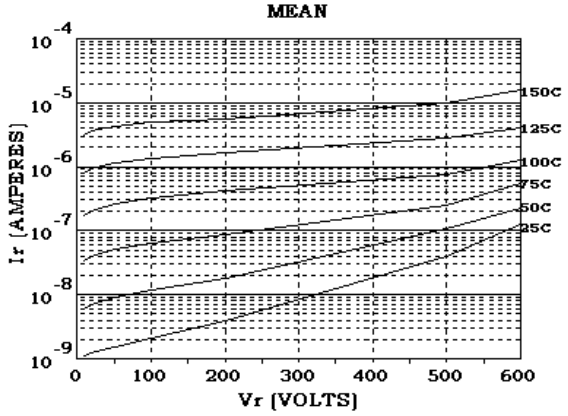


UPR60
TYPICAL

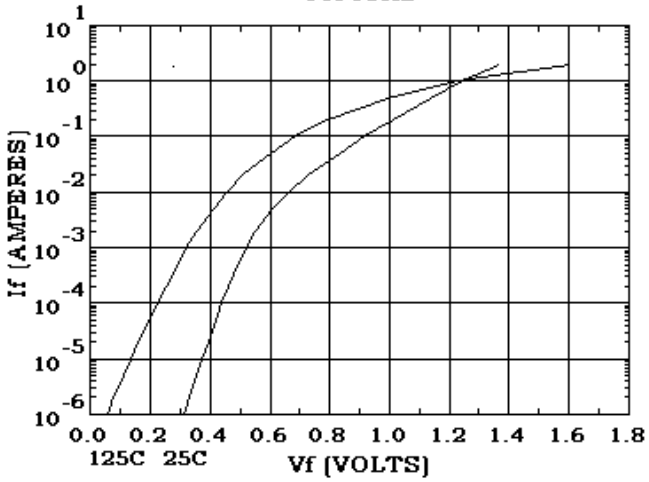




Copyright © 2000


Microsemi
Watertown Division
580 Pleasant Street Watertown, MA 02472 617-926-0404, Fax: 617-924-1235

NOTES

Copyright © 2000


**Microsemi**
Watertown Division
580 Pleasant Street Watertown, MA 02472 617-926-0404, Fax: 617-924-1235