NEC

GaAs MMIC DBS 4X2 IF SWITCH | UPG183GR

FEATURES

- **FOUR INDEPENDENT IF CHANNELS**
- **INTEGRAL SWITCHING TO CHANNEL INPUT TO EITHER CHANNEL OUTPUT**
- **INSERTION LOSS PER CHANNEL:** 7 dB TYP (Z_O = 50 Ω)
- **FREQUENCY RANGE:** 950 MHz to 2150 MHz
- **CHANNEL TO CHANNEL ISOLATION:** 26.5 dB TYP
- **SMALL 16 PIN HTSSOP PACKAGE**

OUTLINE DIMENSIONS (Units in mm)

16 pin HTSSOP

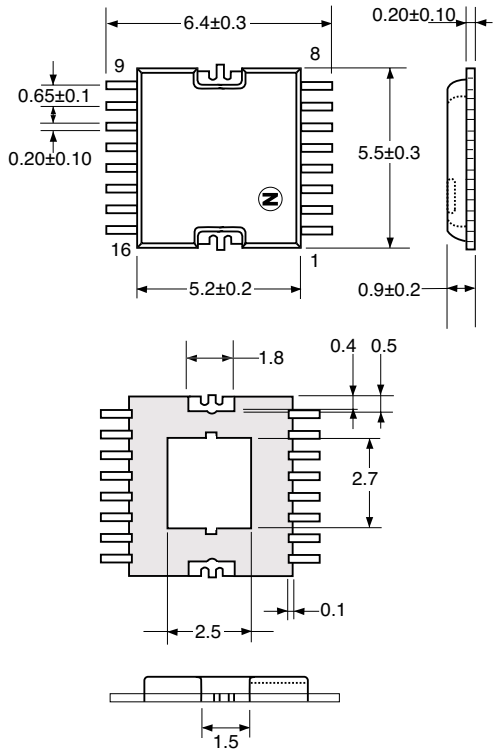

DESCRIPTION

The UPG183GR is intended for use in Direct Broadcast Satellite (DBS) applications within the Low Noise Block (LNB) down converter, for systems where at least two LNB outputs are required. It offers four intermediate frequency amplifier channels that can independently select 1 of 4 IF inputs. It is housed in a very small 16 pin plastic HTSSOP package, available on tape-and-reel, easy to install and contributes to miniaturizing the systems.

ELECTRICAL CHARACTERISTICS

(T_A = +25°C, unless otherwise specified, V_{CONT1} to V_{CONT8} = 0/+5 V, P_{IN} = 0 dBm, Z_O = 50 Ω, Each Port)

PART NUMBER PACKAGE OUTLINE			UPG183GR 16 pin HTSSOP		
SYMBOLS	**PARAMETERS AND CONDITIONS**	**UNITS**	**MIN**	**TYP**	**MAX**
$L_{INS\ 1}$	Insertion Loss 1, f = 0.95 GHz to 1.5 GHz	dB	—	7.0	9.0
$L_{INS\ 2}$	Insertion Loss 2, f = 1.5 GHz to 2.15 GHz	dB	—	8.0	10.0
ΔLINS	Insertion Loss Flatness, | L_{INS} (0.95 GHz) — L_{INS} (2.15 GHz)|	dB	—	1.5	3.0
$I_{SOL\ 1}$	Channel Isolation 1, f = 0.95 GHz to 1.5 GHz	dB	24	26.5	—
$I_{SOL\ 2}$	Channel Isolation 2, f = 1.5 GHz to 2.15 GHz	dB	22	23.5	—
RL(OUT)	Output Return Loss, f = 0.95 GHz to 2.15 GHz	dB	10	14	—
I_{CONT}	Control Current[1], V_{CONT} = +5 V/0 V, RFoff	mA	—	—	0.5

Notes:
1. Per one control pin.

ABSOLUTE MAXIMUM RATINGS[1] (T_A = +25°C)

SYMBOLS	PARAMETERS	UNITS	RATINGS
$V_{CONT1-8}$	Control Voltage 1-8	V	-1.0 to +6.0
P_{TOT}	Total Power Dissipation[2]	W	2
P_{IN}	Input Power	dBm	+ 10
T_A	Operating Ambient Temp.	°C	-40 to +85
T_{STG}	Storage Temperature	°C	-65 to +150

Notes:
1. Operation in excess of any one of these parameters may result in permanent damage.
2. Mounted on a 50x50x1.6 mm double copper clad epoxy glass PWB, T_A = +85°C.

RECOMMENDED OPERATING CONDITIONS (T_A = +25°C)

SYMBOLS	PARAMETERS	UNITS	MIN	TYP	MAX
$V_{CONT(H)}$	Control Voltage (High)	V	+4.5	+5	+5.5
$V_{CONT(L)}$	Control Voltage (Low)	V	-0.5	0	+0.5

EVALUATION CIRCUIT (V_{CONT1} to V_{CONT8} = 0/+5 V, P_{IN} = 0d Bm, Z_O = 50 Ω, DC Blocking Capacitor = 51 pF)

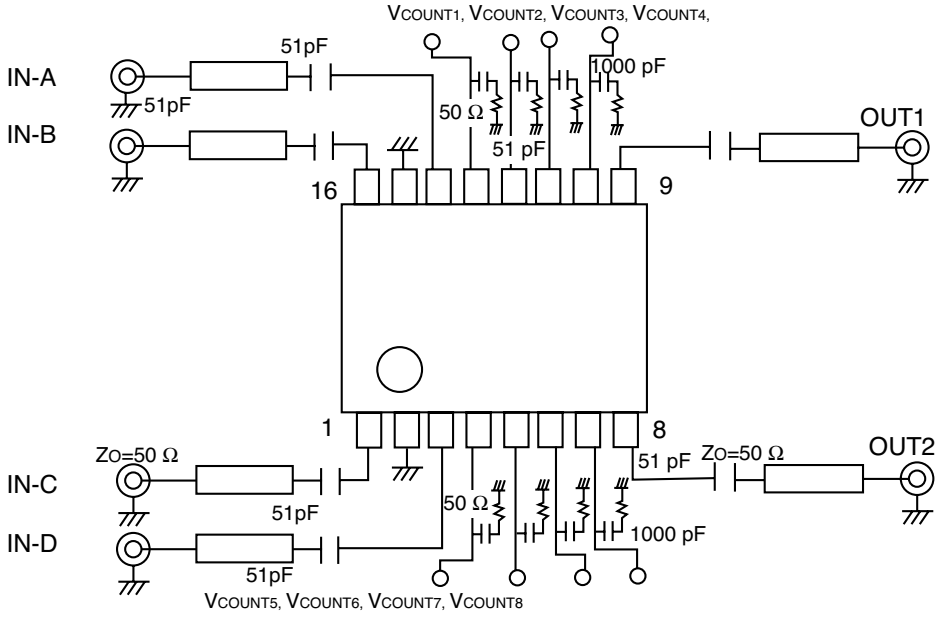

CHANNEL SELECT TRUTH TABLE

ON CHANNEL		CONTROL PIN							
OUT1	OUT2	V_{CONT1}	V_{CONT2}	V_{CONT3}	V_{CONT4}	V_{CONT5}	V_{CONT6}	V_{CONT7}	V_{CONT8}
IN-A	–	High	Low	High	Low	–	–	–	–
IN-B	–	High	Low	Low	High	–	–	–	–
IN-C	–	Low	High	High	Low	–	–	–	–
IN-D	–	Low	High	Low	High	–	–	–	–
–	IN-A	–	–	–	–	High	Low	High	Low
–	IN-B	–	–	–	–	High	Low	Low	High
–	IN-C	–	–	–	–	Low	High	High	Low
–	IN-D	–	–	–	–	Low	High	Low	High

PIN CONNECTION AND INTERNAL BLOCK DIAGRAM

PIN NO.	CONNECTION	PIN NO.	CONNECTION
1	IN-C	9	OUT1
2	GND	10	V_{CONT4}
3	IN-D	11	V_{CONT3}
4	V_{CONT5}	12	V_{CONT2}
5	V_{CONT6}	13	V_{CONT1}
6	V_{CONT7}	14	IN-A
7	V_{CONT8}	15	GND
8	OUT2	16	IN-B

TOP VIEW

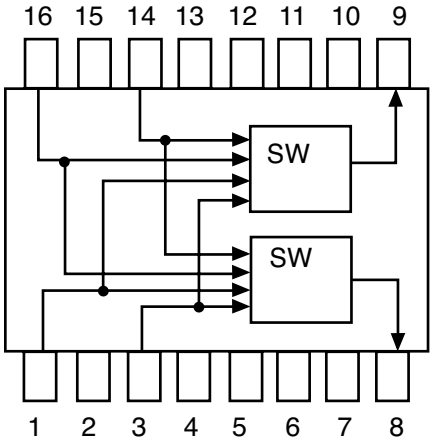

ORDERING INFORMATION

PART NUMBER	PACKAGE	QUANTITY
UPG183GR-E1	16-pin Plastic HTSSOP	Qty. 3k pcs/Reel

Notes:
1. Carrier tape, 12 mm wide.