Empowered by Innovation NEC

78K0/Kx2 Microcontroller

NEC ELECTRONICS AMERICA

The USB microcontroller targets applications such as serial-to-USB and USB-to-serial interface applications, medical equipment, test and measurement products, data loggers, and human interface products such as mouse devices, keyboards, and game controllers.

µPD78F0730
8-Bit Microcontroller with Full-Speed USB 2.0

The 8-bit µPD78F0730 microcontroller with internal Universal Serial Bus (USB) controller is ideal for end-point USB applications that require a full-speed data transfer rate up to 12 Mbps.

Features

- NEC Electronics 8-bit 78K0CPU core
- 16 KB program flash memory (with self-programming capability)
- 3 KB RAM
- USB 2.0 interface (12 Mbps, full speed)
- Three USB-compliant end-point buffers
  - 64-byte × 2 control read/write buffer
  - 64-byte × 2 bulk input buffer
  - 64-byte × 2 bulk output buffer
- One-channel 16-bit timer/event counter
- Two one-channel, 8-bit timers/event counters
- One-channel 8-bit timer
- One-channel watchdog timer (WDT)

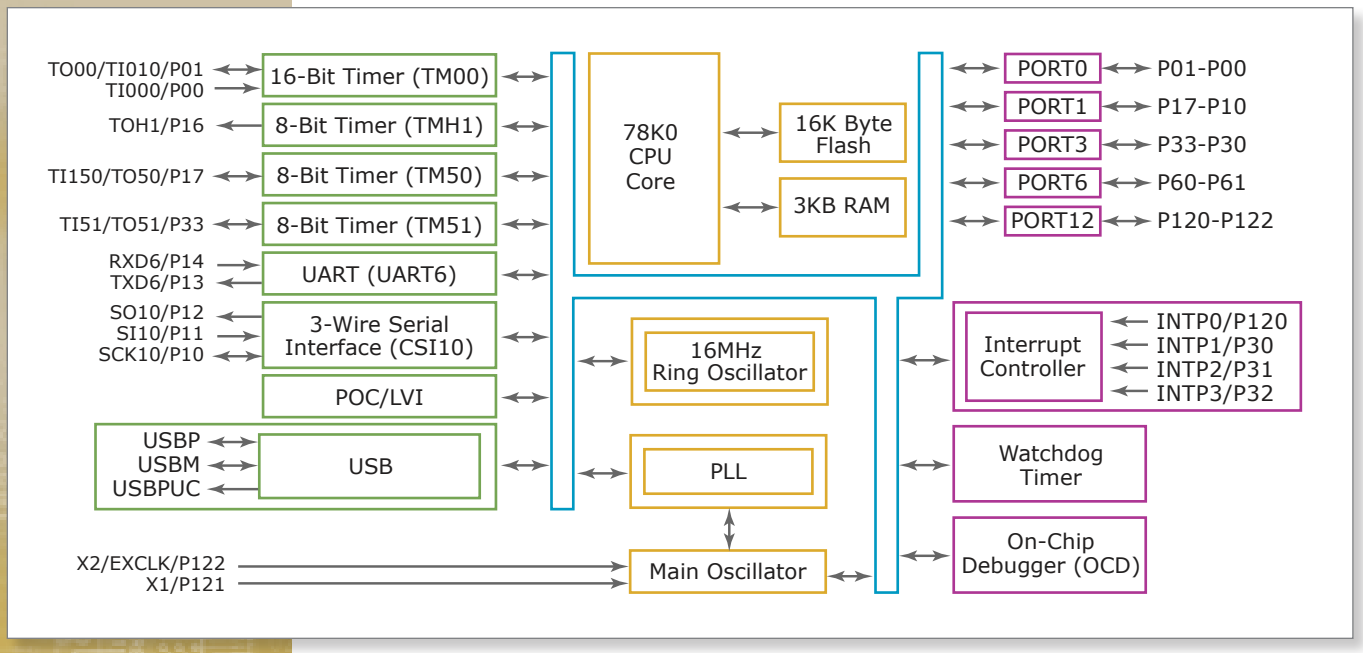

NEC ELECTRONICS

8-Bit Microcontroller with Full-Speed USB 2.0

NEC Electronics America, Inc.
Corporate Headquarters
2880 Scott Boulevard
Santa Clara, CA 95050-2554
1-408-588-6000
www.am.necel.com

NEC Electronics Corporation
1753 Shimonumabe, Nakahara-Ku
Kawasaki, Kanagawa
211-8668, Japan
81-44-435-5111
www.necel.com

NEC Electronics (Europe) GmbH
Arcadiastr. 10, 40472
Duesseldorf, Germany
49-211-6503-0
www.eu.necel.com

Features (continued)

- One-channel UART
- One-channel 3-wire serial interface
- Nineteen general-purpose I/Os (two N-channel, open-drain)
- Operating voltage: 4.0 to 5.5V
- Temperature range: –40 to 85°C
- Internal clock source of 16 MHz for the CPU
- External clock source of 12 or 16 MHz
- 48 MHz USB clock (12 MHz × 4 PLL or 16 MHz × 3 PLL)
- 30-pin plastic SSOP (300 mil, 0.65 mm pin pitch)

Ordering Information

Part Number	Flash Memory	Internal High-Speed RAM	Internal Expansion RAM
µPD78F0730-MC-CAB-AX	16 KB	1 KB	2 KB

For additional information about NEC Electronics' 78K microcontrollers, visit www.am.necel.com/microcontrollers.

The information in this document is current as of May 2008. The information is subject to change without notice. For actual design-in, refer to the latest publications of NEC Electronics data sheets or data books, etc., for the most up-to-date specifications of NEC Electronics products. Not all products and/or types are available in every country. Please check with an NEC Electronics sales representative for availability and additional information. No part of this document may be copied or reproduced in any form or by any means without prior written consent of NEC Electronics. NEC Electronics assumes no responsibility for any errors that may appear in this document. NEC Electronics does not assume any liability for infringement of patents, copyrights or other intellectual property rights of third parties by or arising from the use of any information in this document, or any other liability arising from the use of such information. No license, express, implied or otherwise, is granted under any patents, copyrights or other intellectual property rights of NEC Electronics or others. Descriptions of circuits, software and other related information in this document are provided for illustrative purposes in semiconductor product operation and application examples. The incorporation of these circuits, software and information in the design of customer's equipment shall be done under the full responsibility of customer. NEC Electronics no responsibility for any losses incurred by customers or third parties arising from the use of these circuits, software and information. While NEC Electronics endeavors to enhance the quality, reliability and safety of NEC Electronics products, customers agree and acknowledge that the possibility of defects thereof cannot be eliminated entirely. To minimize risks of damage to property or injury (including death) to persons arising from defects in NEC Electronics products, customers must incorporate sufficient safety measures in their design, such as redundancy, fire-containment and anti-failure features. NEC Electronics products are classified into the following three quality grades: "Standard", "Special" and "Specific". The "Specific" quality grade applies only to NEC Electronics products developed based on a customer-designated "quality assurance program" for a specific application. The recommended applications of NEC Electronics product depend on its quality grade, as indicated below. Customers must check the quality grade of each NEC Electronics product before using it in a particular application. "Standard": Computers, office equipment, communications equipment, test and measurement equipment, audio and visual equipment, home electronic appliances, machine tools, personal electronic equipment and industrial robots. "Special": Transportation equipment (automobiles, trains, ships, etc.), traffic control systems, anti-disaster systems, anti-crime systems, safety equipment and medical equipment (not specifically designed for life support). "Specific": Aircraft, aerospace equipment, submersible repeaters, nuclear reactor control systems, life support systems and medical equipment for life support, etc. The quality grade of NEC Electronics products is "Standard" unless otherwise expressly specified in NEC Electronics data sheets or data books, etc. If customers wish to use NEC Electronics products in applications not intended by NEC Electronics, they must contact NEC Electronics sales representative in advance to determine NEC Electronics' willingness to support a given application.

(Notes)
(1) "NEC Electronics" as used in this statement means NEC Electronics Corporation and also includes its majority-owned subsidiaries. (2) "NEC Electronics products" means any product developed or manufactured by or for NEC Electronics (as defined above).

© May 2008 NEC Electronics America, Inc.
All rights reserved.

Printed in U.S.A. on recycled paper using soy ink.

Document No. U19311EU1V0PB00