NEC

User's Manual

μPD780958 Subseries

8-Bit Single-Chip Microcontrollers

μPD780957(A)
μPD780958(A)

Document No. U13655EJ2V1UD00 (2nd edition)
Date Published May 2003 N CP(K)

© NEC Electronics Corporation 1999, 2003
Printed in Japan

[MEMO]

NOTES FOR CMOS DEVICES

① PRECAUTION AGAINST ESD FOR SEMICONDUCTORS

Note:

Strong electric field, when exposed to a MOS device, can cause destruction of the gate oxide and ultimately degrade the device operation. Steps must be taken to stop generation of static electricity as much as possible, and quickly dissipate it once, when it has occurred. Environmental control must be adequate. When it is dry, humidifier should be used. It is recommended to avoid using insulators that easily build static electricity. Semiconductor devices must be stored and transported in an anti-static container, static shielding bag or conductive material. All test and measurement tools including work bench and floor should be grounded. The operator should be grounded using wrist strap. Semiconductor devices must not be touched with bare hands. Similar precautions need to be taken for PW boards with semiconductor devices on it.

② HANDLING OF UNUSED INPUT PINS FOR CMOS

Note:

No connection for CMOS device inputs can be cause of malfunction. If no connection is provided to the input pins, it is possible that an internal input level may be generated due to noise, etc., hence causing malfunction. CMOS devices behave differently than Bipolar or NMOS devices. Input levels of CMOS devices must be fixed high or low by using a pull-up or pull-down circuitry. Each unused pin should be connected to V_{DD} or GND with a resistor, if it is considered to have a possibility of being an output pin. All handling related to the unused pins must be judged device by device and related specifications governing the devices.

③ STATUS BEFORE INITIALIZATION OF MOS DEVICES

Note:

Power-on does not necessarily define initial status of MOS device. Production process of MOS does not define the initial operation status of the device. Immediately after the power source is turned ON, the devices with reset function have not yet been initialized. Hence, power-on does not guarantee out-pin levels, I/O settings or contents of registers. Device is not initialized until the reset signal is received. Reset operation must be executed immediately after power-on for devices having reset function.

FIP and IEBus are trademarks of NEC Electronics Corporation.
Windows and Windows NT are either registered trademarks or trademarks of Microsoft Corporation in the United States and/or other countries.
PC/AT is a trademark of International Business Machines Corporation.
HP9000 Series 700 and HP-UX are trademarks of Hewlett-Packard Company.
SPARCstation is a trademark of SPARC International, Inc.
SunOS and Solaris are trademarks of Sun Microsystems, Inc.
TRON is an acronym of The Realtime Operating system Nucleus.
ITRON is an abbreviation of Industrial TRON.

These commodities, technology or software, must be exported in accordance with the export administration regulations of the exporting country.
Diversion contrary to the law of that country is prohibited.

- **The information in this document is current as of December, 2002. The information is subject to change without notice. For actual design-in, refer to the latest publications of NEC Electronics data sheets or data books, etc., for the most up-to-date specifications of NEC Electronics products. Not all products and/or types are available in every country. Please check with an NEC Electronics sales representative for availability and additional information.**
- No part of this document may be copied or reproduced in any form or by any means without the prior written consent of NEC Electronics. NEC Electronics assumes no responsibility for any errors that may appear in this document.
- NEC Electronics does not assume any liability for infringement of patents, copyrights or other intellectual property rights of third parties by or arising from the use of NEC Electronics products listed in this document or any other liability arising from the use of such products. No license, express, implied or otherwise, is granted under any patents, copyrights or other intellectual property rights of NEC Electronics or others.
- Descriptions of circuits, software and other related information in this document are provided for illustrative purposes in semiconductor product operation and application examples. The incorporation of these circuits, software and information in the design of a customer's equipment shall be done under the full responsibility of the customer. NEC Electronics assumes no responsibility for any losses incurred by customers or third parties arising from the use of these circuits, software and information.
- While NEC Electronics endeavors to enhance the quality, reliability and safety of NEC Electronics products, customers agree and acknowledge that the possibility of defects thereof cannot be eliminated entirely. To minimize risks of damage to property or injury (including death) to persons arising from defects in NEC Electronics products, customers must incorporate sufficient safety measures in their design, such as redundancy, fire-containment and anti-failure features.
- NEC Electronics products are classified into the following three quality grades: "Standard", "Special" and "Specific".
  The "Specific" quality grade applies only to NEC Electronics products developed based on a customer-designated "quality assurance program" for a specific application. The recommended applications of an NEC Electronics product depend on its quality grade, as indicated below. Customers must check the quality grade of each NEC Electronics product before using it in a particular application.
  "Standard": Computers, office equipment, communications equipment, test and measurement equipment, audio and visual equipment, home electronic appliances, machine tools, personal electronic equipment and industrial robots.
  "Special": Transportation equipment (automobiles, trains, ships, etc.), traffic control systems, anti-disaster systems, anti-crime systems, safety equipment and medical equipment (not specifically designed for life support).
  "Specific": Aircraft, aerospace equipment, submersible repeaters, nuclear reactor control systems, life support systems and medical equipment for life support, etc.

The quality grade of NEC Electronics products is "Standard" unless otherwise expressly specified in NEC Electronics data sheets or data books, etc. If customers wish to use NEC Electronics products in applications not intended by NEC Electronics, they must contact an NEC Electronics sales representative in advance to determine NEC Electronics' willingness to support a given application.

(Note)
(1) "NEC Electronics" as used in this statement means NEC Electronics Corporation and also includes its majority-owned subsidiaries.
(2) "NEC Electronics products" means any product developed or manufactured by or for NEC Electronics (as defined above).

M8E 02.11-1

Regional Information

Some information contained in this document may vary from country to country. Before using any NEC Electronics product in your application, please contact the NEC Electronics office in your country to obtain a list of authorized representatives and distributors. They will verify:

- Device availability
- Ordering information
- Product release schedule
- Availability of related technical literature
- Development environment specifications (for example, specifications for third-party tools and components, host computers, power plugs, AC supply voltages, and so forth)
- Network requirements

In addition, trademarks, registered trademarks, export restrictions, and other legal issues may also vary from country to country.

[GLOBAL SUPPORT]
http://www.necel.com/en/support/support.html

NEC Electronics America, Inc. (U.S.)
Santa Clara, California
Tel: 408-588-6000
800-366-9782

NEC Electronics (Europe) GmbH
Duesseldorf, Germany
Tel: 0211-65 03 01

- **Sucursal en España**
  Madrid, Spain
  Tel: 091-504 27 87
- **Succursale Française**
  Vélizy-Villacoublay, France
  Tel: 01-30-67 58 00
- **Filiale Italiana**
  Milano, Italy
  Tel: 02-66 75 41
- **Branch The Netherlands**
  Eindhoven, The Netherlands
  Tel: 040-244 58 45
- **Tyskland Filial**
  Taeby, Sweden
  Tel: 08-63 80 820
- **United Kingdom Branch**
  Milton Keynes, UK
  Tel: 01908-691-133

NEC Electronics Hong Kong Ltd.
Hong Kong
Tel: 2886-9318

NEC Electronics Hong Kong Ltd.
Seoul Branch
Seoul, Korea
Tel: 02-558-3737

NEC Electronics Shanghai, Ltd.
Shanghai, P.R. China
Tel: 021-6841-1138

NEC Electronics Taiwan Ltd.
Taipei, Taiwan
Tel: 02-2719-2377

NEC Electronics Singapore Pte. Ltd.
Novena Square, Singapore
Tel: 6253-8311

J03.4

Major Revisions in This Edition (1/3)

Page	Description

Throughout	• Change of following register name
	  • 8-bit counter → 8-bit MR counter 0
	  • Serial mode register 3 → Serial operation mode register 3
	  • LCD0 mode register → LCD display mode register 0
	  • LCD0 clock select register → LCD clock control register 0
	• Change of main system clock symbol as shown below.
	  $f_X \rightarrow f_{CC}$
	• Change of example of main system clock oscillation frequency as shown below.
	  1.0 MHz → 1.2 MHz
	• Modification of description of minimum instruction execution time

p. 34	Timer overview table moved from **CHAPTER 7 16-BIT TIMER/EVENT COUNTER 0** to **1.8 Overview of Functions**.
p. 44	Modification of **Figure 2-3. Connection Example of VR_{OUT0}, VR_{OUT1}**
p. 45	Modification of **Table 2-1. Types of Pin I/O Circuits**
p. 52	**3.1.2 Internal data memory space** Addition of descriptions to **(1) Internal high-speed RAM** and **(2) Internal expansion RAM**
p. 80	Modification of **Figure 4-2. Block Diagram of P00 to P06**
p. 82	Addition of **Figure 4-4. Block Diagram of P22 to P27**
p. 83	Addition of **Figure 4-5. Block Diagram of P30, P32, and P35**
p. 84	Addition of **Figure 4-6. Block Diagram of P31 and P37**
p. 87	Addition of **Figure 4-9. Block Diagram of P50 to P55**
p. 100	Addition of $\overline{\text{RESET}}$ pin to **Table 4-4. Mask Option of Mask-ROM Version**
p. 102	Modification of **Figure 5-1. Block Diagram of Clock Generator**
p. 103	Addition of **Table 5-2. System Clock Supplied to Each Peripheral Hardware**
p. 105	Modification of **Table 5-3. Relationship Between CPU Clock and Minimum Instruction Execution Time**
p. 106	Modification of **Figure 5-4. External Circuit of Main System Clock Oscillator**
p. 115	Modification of **5.5.1 Main system clock operations**
p. 117	Total revision of **5.6.2 System clock and CPU clock switching procedure** • Modification of **Figure 5-11. System Clock and CPU Clock Switching** • Modification of descriptions in <1> to <4> • Modification of description in **Note** • Addition of **Caution 1**, modification of descriptions in **Cautions 2** and **3**
p. 124	Deletion of one-shot pulse output function from **CHAPTER 7 16-BIT TIMER/EVENT COUNTER 0**
p. 125	Modification of **Figure 7-1. Block Diagram of 16-Bit Timer/Event Counter 0**
p. 127	Modification of **Table 7-2. TI00/TO0/P31 Pin Valid Edge and Capture/Compare Register Capture Trigger**
p. 130	Modification of **Figure 7-2. Format of 16-Bit Timer Mode Control Register 0 (TMC0)**
p. 131	Addition of **Caution 4** to **Figure 7-3. Format of Capture/Compare Control Register 0 (CRC0)**
p. 132	Modification of **Figure 7-4. Format of 16-Bit Timer Output Control Register 0 (TOC0)**
p. 133	Addition of **Note** to **Figure 7-5. Format of Prescaler Mode Register 0 (PRM0)**

Major Revisions in This Edition (2/3)

Page	Description
p. 138	Addition of **Figure 7-11. Configuration Diagram for PPG Output**
p. 138	Addition of **Figure 7-12. PPG Output Operation Timing**
p. 140	Modification of **Figure 7-15. Timing of Pulse-Width Measurement Operation with Free-Running Counter and One Capture Register (with Both Edges Specified)**
p. 142	Modification of **Figure 7-17. CR01 Capture Operation with Rising Edge Specified**
p. 142	Modification of **Figure 7-18. Timing of Two-Pulse-Width Measurement Operation with Free-Running Counter (with Both Edges Specified)**
p. 144	Modification of **Figure 7-20. Timing of Pulse-Width Measurement Operation with Free-Running Counter and Two Capture Registers (with Rising Edge Specified)**
p. 145	Modification of **Figure 7-22. Timing of Pulse-Width Measurement Operation by Means of Restart (with Rising Edge Specified)**
p. 150 p. 150 p. 151 p. 151 p. 152	**7.6 Operating Cautions for 16-Bit Timer/Event Counter 0** • Modification of **Figure 7-30. Capture Register Data Retention Timing** • Modification of **Figure 7-31. Operation Timing of OVF0 Flag** • Addition of <2> to <4> to **(9) Capture operation** • Modification of <1> in **(10) Compare operation** • Addition of <2> to **(11) Edge detection**
p. 157	Addition of **Caution 2** to **8.5.1 Interval timer operation**
pp. 158, 159	Modification of **Figure 8-4. Timing of Interval Timer Operation (When Using Internal Clock)**
p. 160	Addition of **Caution 2** to **8.5.2 External event counter operation**
p. 161	Modification of **Figure 8-7. Timing of External Event Counter Operation**
p. 162	Modification of **Figure 8-8. Start Timing of 16-Bit Timer Counter 2 (TM2)**
pp. 171, 172	Modification of **Figure 9-6. Timing of Interval Timer Operation**
p. 173	Modification of **Figure 9-7. Start Timing of 8-Bit Timer Counter 8n (TM8n)**
p. 175	Modification of **Figure 10-1. Block Diagram of Watchdog Timer**
p. 181 p. 181	Modification of the following contents in **11.3 Sampling Output Timer/Detector Configuration** • Modification of **Note** • Addition of **Caution**
p. 186 p. 187	**11.4 Sampling Output Timer/Detector Control Registers** • Addition of **Cautions 15** and **16** to **Figure 11-4. Format of SMTD Control Register 0 (TSM0)** • Addition of **Caution** to **(8) SMDT sampling level setting register 0 (SMS0)**
p. 190	Modification of **Figure 12-1. Block Diagram of MR Sampling**
p. 191	Addition of **Caution** to **(2) MRTD compare register 0 (CRM0)** in **12.3 MR Sampling Configuration**
p. 192	Addition of **Note** to **Figure 12-2. Format of MRTD Control Register 0 (TCM0)**
p. 194	Modification of **Figure 12-4. Format of MR Sampling Control Register 0 (MRM0)**
p. 196	Modification of **12.6 Phase Detector Operation**
p. 199	Modification of **Figure 13-1. Block Diagram of Clock Output Controller**

Major Revisions in This Edition (3/3)

Page	Description
	(2) Communication operation in **14.3 Control Registers of Serial Interface UART2**
p. 214	• Modification of **Figure 14-7. Generation Timing of Asynchronous Serial Interface Transmission Completion Interrupt Request**
p. 214	• Addition of **Caution 3** to **Figure 14-7. Generation Timing of Asynchronous Serial Interface Transmission Completion Interrupt Request**
p. 215	• Addition of **Note** to **(d) Reception**
p. 215	• Modification of **Figure 14-8. Generation Timing of Asynchronous Serial Interface Reception Completion Interrupt Request**
p. 216	• Modification of **Figure 14-9. Receive Error Timing**
p. 217	• Addition of **(f) Clearing of RXE2 during UART2 reception**
p. 228	Addition of **Note 1** and **Caution 3** to **Figure 16-3. Format of LCD Display Mode Register 0 (LCDM0)**
p. 229	Addition of **Caution** to **Figure 16-4. Format of LCD Clock Control Register 0 (LCDC0)**
pp. 235 to 240	Total revision of **16.8 Display Mode**
p. 247	Addition of **Caution 3** to **Figure 17-2. Format of Interrupt Flag Registers**
p. 262	Addition of **Figure 18-1. Standby Function**
p. 264	Addition of **(2) Release by non-maskable interrupt request** in **18.2.2 Releasing HALT mode**
p. 265	Modification of **Caution 1** in **CHAPTER 19 RESET FUNCTION**
p. 266	Modification of **Figure 19-2. Reset Timing by $\overline{\text{RESET}}$ Input**
p. 266	Modification of **Figure 19-3. Reset Timing by Watchdog Timer Overflow**
p. 266	Addition of **Figure 19-4. Reset Timing After Power Application**
p. 267	Modification of **Caution 5** in **Table 19-1. Hardware Status After Reset**
p. 269	Addition of **CHAPTER 20 μPD78F0958 (REFERENCE)**
p. 291	Addition of **CHAPTER 22 SUB-HALT TEST PROGRAM**
p. 294	Addition of **CHAPTER 23 ELECTRICAL SPECIFICATIONS**
p. 303	Addition of **CHAPTER 24 PACKAGE DRAWING**
p. 304	Addition of **CHAPTER 25 RECOMMENDED SOLDERING CONDITIONS**
pp. 305 to 314	Modification of **APPENDIX A DEVELOPMENT TOOLS**
p. 315	Addition of **APPENDIX B NOTES ON TARGET SYSTEM DESIGN**
p. 323	Addition of **APPENDIX D REVISION HISTORY**

The mark ★ shows major revised points.

INTRODUCTION

Readers

This manual is intended for users who wish to understand the functions of the μPD780958 Subseries and to design and develop its application systems and programs.
The target devices are products in the following subseries.

μPD780958 Subseries: μPD780957(A), 780958(A)

Purpose

This manual is intended to give users an understanding of the functions described in the Organization below.

Organization

Two manuals are available for the μPD780958 Subseries:
This manual and the Instruction Manual (common to the 78K/0 Series).

μPD780958 Subseries User's Manual (This Manual)	78K/0 Series User's Manual Instructions
• Pin functions • Internal block functions • Interrupts • Other internal peripheral functions • Electrical specifications	• CPU function • Instruction set • Instruction description

How to Read This Manual

It is assumed that the reader of this manual has general knowledge in the fields of electrical engineering, logic circuits, and microcontrollers.

- To understand the overall functions of the μPD780958 Subseries:
  → Read this manual in the order of the **CONTENTS**.
- How to interpret the register format:
  → The name of a bit whose number is in a square is defined as a reserved word in the RA78K0, and already defined in the header file named sfrbit.h. in the CC78K0.
- When you know a register name and want to confirm its details:
  → Refer to **APPENDIX C REGISTER INDEX**.

Conventions

Data significance:	Higher digits on the left and lower digits on the right
Active low representation:	$\overline{xxx}$ (overscore over pin or signal name)
Note:	Footnote for item marked with **Note** in the text
Caution:	Information requiring particular attention
Remark:	Supplementary information
Numerical representation:	Binary ... xxxx or xxxxB
	Decimal ... xxxx
	Hexadecimal ... xxxxH

★ RELATED DOCUMENTS

The related documents indicated in this publication may include preliminary versions. However, preliminary versions are not marked as such.

Documents Related to Devices

Document Name	Document No.
μPD780958 Subseries User's Manual	This manual
78K/0 Series Instructions User's Manual	U12326E

Documents Related to Development Software Tools (User's Manuals)

Document Name		Document No.
RA78K0 Assembler Package	Operation	U14445E
	Language	U14446E
	Structured Assembly Language	U11789E
CC78K0 C Compiler	Operation	U14297E
	Language	U14298E
SM78K Series System Simulator Ver. 2.30 or Later	Operation (Windows™ Based)	U15373E
	External Part User Open Interface Specification	U15802E
ID78K Series Integrated Debugger Ver. 2.30 or Later	Operation (Windows Based)	U15185E
RX78K0 Real-time OS	Fundamentals	U11537E
	Installation	U11536E
Project Manager Ver. 3.12 or Later (Windows Based)		U14610E

Documents Related to Development Hardware Tools (User's Manuals)

Document Name	Document No.
IE-78K0-NS In-Circuit Emulator	U13731E
IE-78K0-NS-A In-Circuit Emulator	U14889E
IE-78K0-NS-PA Performance Board	To be prepared
IE-780958-NS-EM4	To be prepared
IE-78001-R-A In-Circuit Emulator	U14142E
IE-78K0-R-EX1 In-Circuit Emulator	To be prepared

Caution The related documents listed above are subject to change without notice. Be sure to use the latest version of each document for designing.

Documents Related to Flash Memory Writing

Document Name	Document No.
PG-FP3 Flash Memory Programmer User's Manual	U13502E
PG-FP4 Flash Memory Programmer User's Manual	U15260E

Other Related Documents

Document Name	Document No.
SEMICONDUCTOR SELECTION GUIDE - Products and Packages -	X13769X
Semiconductor Device Mounting Technology Manual	**Note**
Quality Grades on NEC Semiconductor Devices	C11531E
NEC Semiconductor Device Reliability/Quality Control System	C10983E
Guide to Prevent Damage for Semiconductor Devices by Electrostatic Discharge (ESD)	C11892E

Note See the “Semiconductor Device Mount Manual” webpage (http://www.necel.com/pkg/en/mount/index.html)

Caution The related documents listed above are subject to change without notice. Be sure to use the latest version of each document for designing.

CONTENTS

CHAPTER 1 GENERAL 25

1.1 Features 25
1.2 Application Fields 26
1.3 Ordering Information 26
1.4 Quality Grade 26
1.5 Pin Configuration (Top View) 27
1.6 78K/0 Series Lineup 29
1.7 Block Diagram 32
1.8 Overview of Functions 33

CHAPTER 2 PIN FUNCTIONS 35

2.1 Pin Function List 35
2.2 Description of Pin Functions 39
2.3 Pin I/O Circuits and Recommended Connection of Unused Pins 46

CHAPTER 3 CPU ARCHITECTURE 49

3.1 Memory Space 49
3.1.1 Internal program memory space 51
3.1.2 Internal data memory space 52
3.1.3 Special-function register (SFR) area 52
3.1.4 Data memory addressing 53
3.2 Processor Registers 55
3.2.1 Control registers 55
3.2.2 General-purpose registers 58
3.2.3 Special-function registers (SFRs) 59
3.3 Addressing Instruction Address 64
3.3.1 Relative addressing 64
3.3.2 Immediate addressing 65
3.3.3 Table indirect addressing 66
3.3.4 Register addressing 67
3.4 Addressing of Operand Address 68
3.4.1 Implied addressing 68
3.4.2 Register addressing 69
3.4.3 Direct addressing 70
3.4.4 Short direct addressing 71
3.4.5 Special-function register (SFR) addressing 72
3.4.6 Register indirect addressing 73
3.4.7 Based addressing 74
3.4.8 Based indexed addressing 75
3.4.9 Stack addressing 75

CHAPTER 4 PORT FUNCTIONS 76

4.1 Port Functions 76

4.2 Port Configuration 79
4.2.1 Port 0 79
4.2.2 Port 2 81
4.2.3 Port 3 83
4.2.4 Port 4 86
4.2.5 Port 5 87
4.2.6 Port 6 89
4.2.7 Port 7 91
4.2.8 Port 8 92
4.2.9 Port 9 93
4.3 Port Function Control Registers 94
4.4 Port Function Operations 99
4.4.1 Writing to I/O ports 99
4.4.2 Reading from I/O ports 99
4.4.3 Arithmetic operations on I/O ports 99
4.5 Mask Option Selection 100

CHAPTER 5 CLOCK GENERATOR 101

5.1 Clock Generator Functions 101
5.2 Clock Generator Configuration 101
5.3 Clock Generator Control Registers 104
5.4 Main System Clock Oscillator 106
5.4.1 Main system clock oscillator 106
5.4.2 Subsystem clock 1 oscillator 109
5.4.3 Divider 111
5.4.4 Subsystem clock 2 oscillator 111
5.5 Clock Generator Operations 114
5.5.1 Main system clock operations 115
5.5.2 Subsystem clock 1 operations 115
5.6 Changing System Clock and CPU Clock Settings 116
5.6.1 Time required for switchover between system clock and CPU clock 116
5.6.2 System clock and CPU clock switching procedure 117

CHAPTER 6 REAL-TIME OUTPUT FUNCTION 118

6.1 Real-Time Output Functions 118
6.2 Real-Time Output Configuration 118
6.3 Real-Time Output Port Control Registers 120
6.4 Real-Time Output Operation 121
6.5 Real-Time Output Function Operating Cautions 123

CHAPTER 7 16-BIT TIMER/EVENT COUNTER 0 124

7.1 Outline of 16-Bit Timer/Event Counter 0 124
7.2 Functions of 16-Bit Timer/Event Counter 0 124
7.3 Configuration of 16-Bit Timer/Event Counter 0 126
7.4 Control Registers of 16-Bit Timer/Event Counter 0 129
7.5 Operations of 16-Bit Timer/Event Counter 0 135
7.5.1 Interval timer operation 135

7.5.2 PPG output operation ... 137
7.5.3 Pulse-width measurement operations ... 139
7.5.4 External event counter operation ... 146
7.5.5 Square-wave output operation ... 148
7.6 Operating Cautions for 16-Bit Timer/Event Counter 0 ... 149

CHAPTER 8 16-BIT TIMER/EVENT COUNTER 2 ... 153

8.1 Outline of 16-Bit Timer/Event Counter 2 ... 153
8.2 Functions of 16-Bit Timer/Event Counter 2 ... 153
8.3 Configuration of 16-Bit Timer/Event Counter 2 ... 153
8.4 Control Registers of 16-Bit Timer/Event Counter 2 ... 155
8.5 Operations of 16-Bit Timer/Event Counter 2 ... 157
8.5.1 Interval timer operation ... 157
8.5.2 External event counter operation ... 160
8.5.3 External event counter input control operation ... 161
8.6 Operating Cautions for 16-Bit Timer/Event Counter 2 ... 162

CHAPTER 9 8-BIT TIMERS 80 TO 83 ... 164

9.1 Outline of 8-Bit Timers 80 to 83 ... 164
9.2 Functions of 8-Bit Timers 80 to 83 ... 164
9.3 Configuration of 8-Bit Timers 80 to 83 ... 164
9.4 Control Register of 8-Bit Timers 80 to 83 ... 166
9.5 Operations of 8-Bit Timers 80 to 83 ... 170
9.6 Operating Cautions for 8-Bit Timers 80 to 83 ... 173

CHAPTER 10 WATCHDOG TIMER ... 174

10.1 Outline of Watchdog Timer ... 174
10.2 Watchdog Timer Functions ... 174
10.3 Watchdog Timer Configuration ... 175
10.4 Watchdog Timer Control Registers ... 176
10.5 Watchdog Timer Operations ... 178
10.5.1 Watchdog timer operation ... 178
10.5.2 Interval timer operation ... 179

CHAPTER 11 SAMPLING OUTPUT TIMER/DETECTOR ... 180

11.1 Outline of Sampling Output Timer/Detector ... 180
11.2 Sampling Output Timer/Detector Function ... 180
11.3 Sampling Output Timer/Detector Configuration ... 180
11.4 Sampling Output Timer/Detector Control Registers ... 183

CHAPTER 12 MR SAMPLING FUNCTION ... 190

12.1 Outline of MR Sampling Function ... 190
12.2 MR Sampling Function ... 190
12.3 MR Sampling Configuration ... 191
12.4 MR Sampling Control Registers ... 192
12.5 MR Sampling Output Circuit Operations ... 195
12.6 Phase Detector Operation ... 196

12.7 MR Sampling Function Operating Cautions 197

CHAPTER 13 CLOCK OUTPUT CONTROLLER 198

13.1 Clock Output Controller Functions 198
13.2 Clock Output Controller Configuration 199
13.3 Clock Output Function Control Registers 200

CHAPTER 14 SERIAL INTERFACE UART2 202

14.1 Functions of Serial Interface UART2 202
14.2 Configuration of Serial Interface UART2 204
14.3 Control Registers of Serial Interface UART2 206

CHAPTER 15 SERIAL INTERFACE SIO3 218

15.1 Functions of Serial Interface SIO3 218
15.2 Configuration of Serial Interface SIO3 219
15.3 Control Registers of Serial Interface SIO3 220
15.4 Operations of Serial Interface SIO3 222
15.4.1 Operation stop mode 222
15.4.2 3-wire serial I/O mode 222

CHAPTER 16 LCD CONTROLLER/DRIVER 225

16.1 LCD Controller/Driver Functions 225
16.2 LCD Controller/Driver Configuration 227
16.3 LCD Controller/Driver Control Registers 228
16.4 LCD Controller/Driver Settings 230
16.5 LCD Display Data Memory 230
16.6 Common Signals and Segment Signals 231
16.7 Supply of LCD Drive Voltages V_{LC1} and V_{LC2} 234
16.8 Display Mode 235
16.8.1 Static display example 235
16.8.2 3-time-division display example 238

CHAPTER 17 INTERRUPT FUNCTIONS 241

17.1 Types of Interrupt Functions 241
17.2 Interrupt Sources and Configuration 241
17.3 Interrupt Function Control Registers 245
17.4 Interrupt Servicing Operation 252
17.4.1 Non-maskable interrupt request acknowledgement operation 252
17.4.2 Maskable interrupt request acknowledgement operation 255
17.4.3 Software interrupt request acknowledgment operation 257
17.4.4 Multiple interrupt processing 258
17.4.5 Pending interrupt requests 261

CHAPTER 18 STANDBY FUNCTION 262

18.1 Standby Function and Configuration 262
18.2 Operation of Standby Function 263

18.2.1 Setting and operation status of HALT mode 263
18.2.2 Releasing HALT mode 263

CHAPTER 19 RESET FUNCTION 265

★ CHAPTER 20 μPD78F0958 (REFERENCE) 269

20.1 Memory Size Switching Register 270
20.2 Internal Expansion RAM Size Switching Register (IXS) 271
20.3 Flash Memory Programming 272
20.3.1 Selection of communication mode 272
20.3.2 Flash memory programming function 273
20.3.3 Connection of Flashpro III and Flashpro IV 274

CHAPTER 21 INSTRUCTION SET 275

21.1 Conventions 276
21.1.1 Operand representation and description formats 276
21.1.2 Description of operation column 277
21.1.3 Description of flag operation column 277
21.2 Operation List 278
21.3 Instruction List by Addressing 287

★ CHAPTER 22 SUB-HALT TEST PROGRAM 291

22.1 Sub-HALT Test Program Overview 291
22.2 Sub-HALT Test Program Flowchart 291
22.3 Verification Form 292

★ CHAPTER 23 ELECTRICAL SPECIFICATIONS 294

★ CHAPTER 24 PACKAGE DRAWING 303

★ CHAPTER 25 RECOMMENDED SOLDERING CONDITIONS 304

APPENDIX A DEVELOPMENT TOOLS 305

★ A.1 Software Package 307
A.2 Language Processing Software 307
★ A.3 Control Software 308
★ A.4 Flash Memory Writing Tools 308
A.5 Debugging Tools (Hardware) 309
A.5.1 When using in-circuit emulator IE-78K0-NS or IE-78K0-NS-A 309
A.5.2 When using in-circuit emulator IE-78001-R-A 310
A.6 Debugging Tools (Software) 311
★ A.7 Embedded Software 312
★ A.8 System Upgrade from Former In-Circuit Emulator for 78K/0 Series to IE-78001-R-A 313
A.9 Conversion Adapter (TGC-100SDW) Package Drawing 314

★ APPENDIX B NOTES ON TARGET SYSTEM DESIGN 315

APPENDIX C REGISTER INDEX 317

C.1 Register Index (Register Name) 317
C.2 Register Index (Register Symbol) 320

★ APPENDIX D REVISION HISTORY 323

LIST OF FIGURES (1/5)

Figure No.	Title	Page
2-1	Recommended Connection Example of CAPH and CAPL (3-Time Division Bias Mode)	43
2-2	Recommended Connection Example of V_{LC1} and V_{LC2} (3-Time Division Bias Mode)	44
2-3	Connection Example of VR_{OUT0} and VR_{OUT1}	44
2-4	Pin I/O Circuits	47
3-1	Memory Map (for μPD780957(A))	49
3-2	Memory Map (for μPD780958(A))	50
3-3	Data Memory Addressing (μPD780957(A))	53
3-4	Data Memory Addressing (μPD780958(A))	54
3-5	Format of Program Counter	55
3-6	Format of Program Status Word	55
3-7	Format of Stack Pointer	57
3-8	Data Saved to Stack Memory	57
3-9	Data Restored from Stack Memory	57
3-10	Format of General-Purpose Registers	58
4-1	Port Configuration	76
4-2	Block Diagram of P00 to P06	80
4-3	Block Diagram of P20 and P21	81
4-4	Block Diagram of P22 to P27	82
4-5	Block Diagram of P30, P32, and P35	83
4-6	Block Diagram of P31 and P37	84
4-7	Block Diagram of P33, P34, and P36	85
4-8	Block Diagram of P40 to P47	86
4-9	Block Diagram of P50 to P55	87
4-10	Block Diagram of P56 and P57	88
4-11	Block Diagram of P60 to P62	89
4-12	Block Diagram of P63 to P67	90
4-13	Block Diagram of P70 to P77	91
4-14	Block Diagram of P80 to P87	92
4-15	Block Diagram of P90 to P95	93
4-16	Format of Port Mode Registers (PM0 and PM2 to PM9)	95
4-17	Format of Pull-up Resistor Option Registers (PU0 and PU2 to PU9)	97
4-18	Format of Port Function Control Registers (PF7 to PF9)	98
5-1	Block Diagram of Clock Generator	102
5-2	Format of Processor Clock Control Register (PCC)	104
5-3	Format of SUB2 Clock Control Register (CKC)	105
5-4	External Circuit of Main System Clock Oscillator	106
5-5	Examples of Incorrect Resonator Connection	107
5-6	External Circuit of Subsystem Clock 1 Oscillator	109
5-7	Examples of Incorrect Resonator Connection	109

LIST OF FIGURES (2/5)

Figure No.	Title	Page
5-8	External Circuit of Subsystem Clock 2 Oscillator	111
5-9	Examples of Incorrect Resonator Connection	112
5-10	Main System Clock Stop Function (Operation when MCC is set to 1 after setting CSS to 1 during main system clock operation)	115
5-11	System Clock and CPU Clock Switching	117
6-1	Block Diagram of Real-Time Output Port 1 (RTO1)	119
6-2	Configuration of RTO Data Registers 10 and 11 (RTO10 and RTO11)	119
6-3	Format of RTO Operation Mode Register 1 (RTM1)	120
6-4	Example of Real-Time Output Timing	122
7-1	Block Diagram of 16-Bit Timer/Event Counter 0	125
7-2	Format of 16-Bit Timer Mode Control Register 0 (TMC0)	130
7-3	Format of Capture/Compare Control Register 0 (CRC0)	131
7-4	Format of 16-Bit Timer Output Control Register 0 (TOC0)	132
7-5	Format of Prescaler Mode Register 0 (PRM0)	133
7-6	Format of Port Mode Register 3 (PM3)	134
7-7	Control Register Settings for Interval Timer Operation	135
7-8	Configuration Diagram for Interval Timer	136
7-9	Interval Timer Operation Timing	136
7-10	Control Register Settings for PPG Output Operation	137
7-11	Configuration Diagram for PPG Output	138
7-12	PPG Output Operation Timing	138
7-13	Control Register Settings for Pulse-Width Measurement with Free-Running Counter and One Capture Register	139
7-14	Configuration Diagram for Pulse-Width Measurement by Free-Running Counter	140
7-15	Timing of Pulse-Width Measurement Operation with Free-Running Counter and One Capture Register (with Both Edges Specified)	140
7-16	Control Register Settings for Two-Pulse-Width Measurement with Free-Running Counter	141
7-17	CR01 Capture Operation with Rising Edge Specified	142
7-18	Timing of Two-Pulse-Width Measurement Operation with Free-Running Counter (with Both Edges Specified)	142
7-19	Control Register Settings for Pulse-Width Measurement with Free-Running Counter and Two Capture Registers	143
7-20	Timing of Pulse-Width Measurement Operation with Free-Running Counter and Two Capture Registers (with Rising Edge Specified)	144
7-21	Control Register Settings for Pulse-Width Measurement by Means of Restart	145
7-22	Timing of Pulse-Width Measurement Operation by Means of Restart (with Rising Edge Specified)	145
7-23	Control Register Settings in External Event Counter Mode	146
7-24	Configuration Diagram for External Event Counter	147
7-25	External Event Counter Operation Timing (with Rising Edge Specified)	147
7-26	Control Register Settings in Square-Wave Output Mode	148

LIST OF FIGURES (3/5)

Figure No.	Title	Page
7-27	Timing of Square-Wave Output Operation	148
7-28	Start Timing of 16-Bit Timer Counter 0	149
7-29	Timing After Change of Compare Register During Timer Count Operation	149
7-30	Capture Register Data Retention Timing	150
7-31	Operation Timing of OVF0 Flag	150
8-1	Block Diagram of 16-Bit Timer/Event Counter 2	154
8-2	Format of Timer Mode Control Register 2 (TMC2)	155
8-3	Format of Timer Input Control Register 2 (TICT2)	156
8-4	Timing of Interval Timer Operation (When Using Internal Clock)	158
8-5	Control Register Settings in External Event Counter Mode	160
8-6	Configuration Diagram for External Event Counter	160
8-7	Timing of External Event Counter Operation	161
8-8	Start Timing of 16-Bit Timer Counter 2 (TM2)	162
9-1	Block Diagram of 8-Bit Timers 80 to 83	164
9-2	Format of 8-Bit Timer Control Register 80 (TMC80)	166
9-3	Format of 8-Bit Timer Control Register 81 (TMC81)	167
9-4	Format of 8-Bit Timer Control Register 82 (TMC82)	168
9-5	Format of 8-Bit Timer Control Register 83 (TMC83)	169
9-6	Timing of Interval Timer Operation	171
9-7	Start Timing of 8-Bit Timer Counter 8n (TM8n)	173
10-1	Block Diagram of Watchdog Timer	175
10-2	Format of Watchdog Timer Clock Select Register (WDCS)	176
10-3	Format of Watchdog Timer Mode Register (WDTM)	177
11-1	Block Diagram of Sampling Output Timer/Detector	182
11-2	Format of SMTD Clock Select Register A0 (TCSA0)	184
11-3	Format of SMTD Clock Select Register B0 (TCSB0)	184
11-4	Format of SMTD Control Register 0 (TSM0)	185
11-5	Format of SMTD Sampling Level Setting Register 0 (SMS0)	187
11-6	Format of SMTD Sampling Pin Status Register 0 (SMD0)	187
11-7	Timing Chart of SMO0 Output	188
11-8	Timing Chart of Sampling Detection	189
12-1	Block Diagram of MR Sampling	190
12-2	Format of MRTD Control Register 0 (TCM0)	192
12-3	Format of MRTD Output Control Register 0 (TMM0)	193
12-4	Format of MR Sampling Control Register 0 (MRM0)	194
12-5	Timing Charts of MRO0/MRO1 Outputs	195
12-6	Timing Example of Phase Detector	196

LIST OF FIGURES (4/5)

Figure No.	Title	Page
13-1	Block Diagram of Clock Output Controller	199
13-2	Format of Clock Output Select Register (CKS)	200
13-3	Format of Port Mode Register 3 (PM3)	201
14-1	Block Diagram of Serial Interface UART2	203
14-2	Format of Asynchronous Serial Interface Mode Register 2 (ASIM2)	207
14-3	Format of Asynchronous Serial Interface Status Register 2 (ASIS2)	208
14-4	Format of Asynchronous Serial Interface Function Register 2 (ASIF2)	209
14-5	Format of UART Pin Switching Register (UTCH0)	210
14-6	Format of Asynchronous Serial Interface Transmit/Receive Data (Positive Logic)	212
14-7	Generation Timing of Asynchronous Serial Interface Transmission Completion Interrupt Request	214
14-8	Generation Timing of Asynchronous Serial Interface Reception Completion Interrupt Request	215
14-9	Receive Error Timing	216
14-10	Timing for Clearing RXE2 (to 0) (During UART2 Reception)	217
15-1	Block Diagram of Serial Interface SIO3	218
15-2	Format of Serial Operation Mode Register 3 (CSIM3)	221
15-3	Format of Serial Operation Mode Register 3 (CSIM3) (Operation Stop Mode)	222
15-4	Format of Serial Operation Mode Register 3 (CSIM3) (3-Wire Serial I/O Mode)	223
15-5	Timing of 3-Wire Serial I/O Mode	224
16-1	Block Diagram of LCD Controller/Driver	226
16-2	Block Diagram of LCD Clock Selector	227
16-3	Format of LCD Display Mode Register 0 (LCDM0)	228
16-4	Format of LCD Clock Control Register 0 (LCDC0)	229
16-5	Format of Port Function Control Registers 7 to 9 (PF7 to PF9)	229
16-6	Relationship Between LCD Display Data Memory Contents and Segment/Common Outputs	230
16-7	Common Signal Waveform	232
16-8	Voltages and Phases of Common Signal and Segment Signal	233
16-9	Connection Example of LCD Drive Voltage	234
16-10	Static LCD Display Pattern and Electrode Connections	235
16-11	Connection Example of Static LCD Panel	236
16-12	Static LCD Driving Waveform Example	237
16-13	3-Time-Division LCD Display Pattern and Electrode Connections	238
16-14	Connection Example of 3-Time-Division LCD Panel	239
16-15	Example of 3-Time-Division LCD Drive Waveform (1/3 Bias)	240
17-1	Basic Configuration of Interrupt Function	243
17-2	Format of Interrupt Request Flag Registers	247
17-3	Format of Interrupt Mask Flag Registers	248
17-4	Format of Priority Specification Flag Registers	249

LIST OF FIGURES (5/5)

Figure No.	Title	Page
17-5	Format of External Interrupt Rising Edge Enable Register (EGP) and External Interrupt Falling Edge Enable Register (EGN)	250
17-6	Configuration of Program Status Word (PSW)	251
17-7	Flowchart from Non-Maskable Interrupt Request Generation to Acknowledgement	253
17-8	Timing of Non-Maskable Interrupt Request Acknowledgement	253
17-9	Non-Maskable Interrupt Request Acknowledgement Operation	254
17-10	Interrupt Request Acknowledgement Program Algorithm	256
17-11	Interrupt Request Acknowledgment Timing (Minimum Time)	257
17-12	Interrupt Request Acknowledgement Timing (Maximum Time)	257
17-13	Example of Multiple Interrupt Processing	259
17-14	Pending Interrupt Requests	261
18-1	Standy Function	262
18-2	Release of HALT Mode by Interrupt Request	263
18-3	Release of HALT Mode by $\overline{\text{RESET}}$ Input	264
19-1	Block Diagram of Reset Function	265
19-2	Reset Timing by $\overline{\text{RESET}}$ Input	266
19-3	Reset Timing by Watchdog Timer Overflow	266
19-4	Reset Timing After Power Application	266
20-1	Format of Memory Size Switching Register (IMS)	270
20-2	Format of Internal Expansion RAM Size Switching Register (IXS)	271
20-3	Communication Mode Selection Format	273
20-4	Connection of Flashpro III and Flashpro IV Using 3-Wire Serial I/O (SIO3) Mode	274
20-5	Connection of Flashpro III and Flashpro IV Using UART (UART2) Mode	274
A-1	Development Tool Configuration	306
A-2	TGC-100SDW Package Drawing (For Reference Only) (Unit: mm)	314
B-1	Distance Between In-Circuit Emulator and Conversion Adapter (1)	315
B-2	Distance Between In-Circuit Emulator and Conversion Adapter (2)	316
B-3	Connection Condition of Target System	316

LIST OF TABLES (1/2)

Table No.	Title	Page
2-1	Types of Pin I/O Circuits	46
3-1	Internal Memory Capacity	51
3-2	Vector Table	51
3-3	List of Special-Function Registers	60
4-1	Port Functions	77
4-2	Port Configuration	79
4-3	Pull-up Resistor Connection of Port 6	89
4-4	Mask Option of Mask-ROM Version	100
5-1	Configuration of Clock Generator	101
5-2	System Clock Supplied to Each Peripheral Hardware	103
5-3	Relationship Between CPU Clock and Minimum Instruction Execution Time	105
5-4	Maximum Time Required for CPU Clock Switchover	116
6-1	Configuration of Real-Time Output Port	118
7-1	Configuration of 16-Bit Timer/Event Counter 0	126
7-2	TI00/TO0/P31 Pin Valid Edge and Capture/Compare Register Capture Trigger	127
7-3	TI01/P30 Pin Valid Edge and Capture/Compare Register Capture Trigger	127
8-1	Configuration of 16-Bit Timer/Event Counter 2	153
9-1	Configuration of 8-Bit Timers 80 to 83	164
9-2	Count Clock Values of TM80 to TM83	165
10-1	Loop Detection Time of Watchdog Timer	174
10-2	Interval Time	174
10-3	Watchdog Timer Configuration	175
10-4	Loop Detection Time of Watchdog Timer	178
10-5	Interval Time of Interval Timer	179
12-1	Configuration of MR Sampling	191
13-1	Configuration of Clock Output Controller	199
14-1	Configuration of Serial Interface UART2	204
14-2	Example of Relationship Between Baud Rate Generator/Counter Input Selection Clock and Baud Rate	211
14-3	Receive Error Causes	216
15-1	Configuration of Serial Interface SIO3	219

LIST OF TABLES (2/2)

Table No.	Title	Page
16-1	Maximum Number of Display Pixels	225
16-2	Configuration of LCD Controller/Driver	227
16-3	COM Signals	231
16-4	Selection and Non-Selection Voltages (COM0)	235
16-5	Selection and Non-Selection Voltages (COM0 to COM2)	238
17-1	Interrupt Source List	242
17-2	Flags Corresponding to Interrupt Request Sources	246
17-3	Time from Generation of Maskable Interrupt Request to Interrupt Servicing	255
17-4	Interrupt Requests Enabled for Multiple Interrupt Processing During Interrupt Servicing	258
18-1	Operation Status in HALT Mode	263
18-2	Operation After Release of HALT Mode	264
19-1	Hardware Status After Reset	267
20-1	Differences Between μPD78F0958 and Mask ROM Versions	269
20-2	Memory Size Switching Register Settings	270
20-3	Communication Mode List	272
20-4	Main Functions of Flash Memory Programming	273
21-1	Operand Representation and Description Formats	276
25-1	Surface Mounting Type Soldering Conditions	304
A-1	System Upgrade Method from Former In-Circuit Emulator for 78K/0 Series to IE-78001-R-A	313
B-1	Distance Between In-Circuit Emulator and Conversion Adapter	315

CHAPTER 1 GENERAL

1.1 Features

- ○ 78K/0 Series (8-bit CPU core)
- ○ Main system clock: RC oscillation
- ★ ○ Minimum instruction execution time: 1.7 μs (@ 1.2 MHz operation with main system clock)
  61 μs (@ 32.768 kHz operation with subsystem clock 1)
- ○ Instruction set suited to system control
- ○ Interrupt controller
  - Vectored interrupt servicing
- ○ Standby function
  - HALT mode
- ○ Internal memory: Mask ROM 48 KB (μPD780957(A))
  60 KB (μPD780958(A))
  RAM 2,048 bytes (μPD780957(A), 780958(A))
- ○ I/O ports (including pins that have an alternate function as segment signal outputs): 69
  - Software programmable pull-up ports: 66
  - Mask option pull-up ports: 3
- ○ LCD controller/driver
- ○ Real-time output function: 4-bit resolution × 4 channels
- ○ MR sampling function: 1 channel (can be used as an 8-bit timer when MR sampling function is not used)
- ○ Timer: 7 channels
  - 16-bit timer/event counter: 2 channels
  - 8-bit timer: 4 channels
  - Watchdog timer: 1 channel
- ○ Serial interface: 2 channels
  - UART mode (with pin switching function): 1 channel (communication is possible with subsystem clock 1 or 2)
  - 3-wire serial I/O mode: 1 channel
- ○ Sampling output timer/detector: 1 channel
  (can be used as a 2-channel 8-bit timer when sampling output timer/detector is not used)
- ○ Power supply voltage: V_{DD} = 2.2 to 3.5 V

1.2 Application Fields

Industrial meter control, etc.

1.3 Ordering Information

Part Number	Package	Internal ROM
μPD780957GC(A)-×××-8EU	100-pin plastic LQFP (fine-pitch) (14 × 14)	Mask ROM
μPD780958GC(A)-×××-8EU	100-pin plastic LQFP (fine-pitch) (14 × 14)	Mask ROM

Remark ××× indicates ROM code suffix.

1.4 Quality Grade

Special (for high-reliability electronic equipment)

Please refer to “Quality Grades on NEC Semiconductor Devices” (Document No. C11531E) published by NEC Corporation to know the specification of the quality grade on the devices and its recommended applications.

1.5 Pin Configuration (Top View)

- **100-pin plastic LQFP (fine-pitch) (14 × 14)**
  μPD780957GC(A)-×××-8EU, 780958GC(A)-×××-8EU

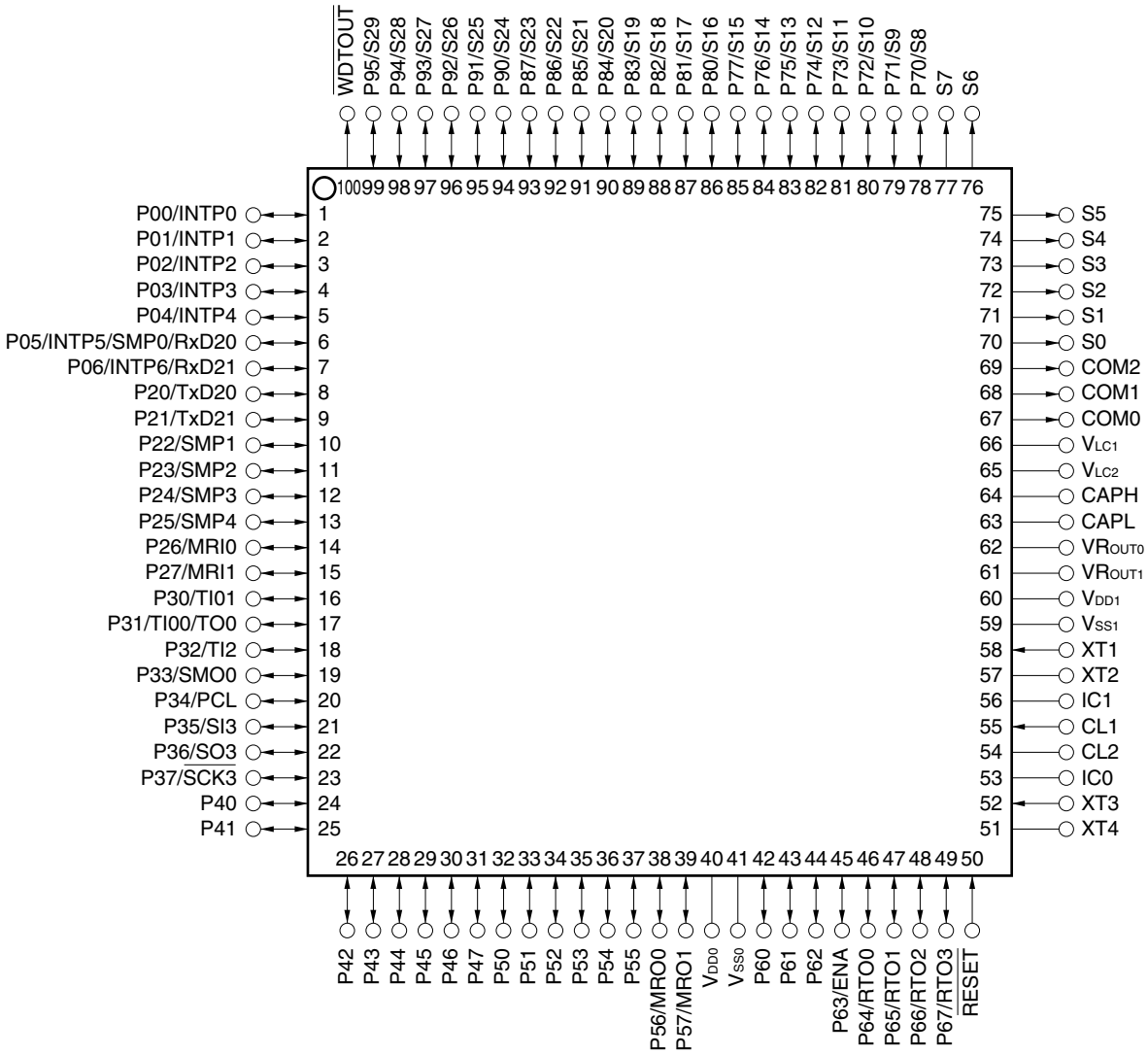

Caution Be sure to connect the IC0 and IC1 pins to the V_{SS0} or V_{SS1} pin directly.

Remark When the μPD780958 Subseries is used in applications where the noise generated inside the microcontroller needs to be reduced, the implementation of noise reduction measures, such as supplying separate power to V_{DD0} and V_{DD1} individually, and connecting V_{SS0} and V_{SS1} to separate ground lines, is recommended.

CAPH and CAPL:	Capacitor (for LCD)
CL1 and CL2:	RC oscillator
COM0 to COM2:	Common output
ENA:	Enable
IC0 and IC1:	Internally connected
INTP0 to INTP6:	External interrupt input
MRI0 and MRI1:	MR sampling input
MRO0 and MRO1:	MR sampling output
P00 to P06:	Port 0
P20 to P27:	Port 2
P30 to P37:	Port 3
P40 to P47:	Port 4
P50 to P57:	Port 5
P60 to P67:	Port 6
P70 to P77:	Port 7
P80 to P87:	Port 8
P90 to P95:	Port 9
PCL:	Programmable clock
$\overline{\text{RESET}}$:	Reset
RTO0 to RTO3:	Real-time output port
RxD20 and RxD21:	Receive data
$\overline{\text{SCK3}}$:	Serial clock
SI3:	Serial input
SMP0 to SMP4:	Sampling input
SMO0:	Sampling output
SO3:	Serial output
S0 to S29:	Segment output
TI00, TI01, and TI2:	Timer input
TO0:	Timer output
TxD20 and TxD21:	Transmit data
V_{DD0} and V_{DD1}:	Power supply
V_{LC1} and V_{LC2}:	Power supply (for LCD)
VR_{OUT0} and VR_{OUT1}:	Capacitor (for regulator)
V_{SS0} and V_{SS1}:	Ground
$\overline{\text{WDTOUT}}$:	Watchdog timer output
XT1 and XT2:	Crystal (subsystem clock 1)
XT3 and XT4:	Crystal (subsystem clock 2)

★ 1.6 78K/0 Series Lineup

The products in the 78K/0 Series are listed below. The names enclosed in boxes are subseries names.

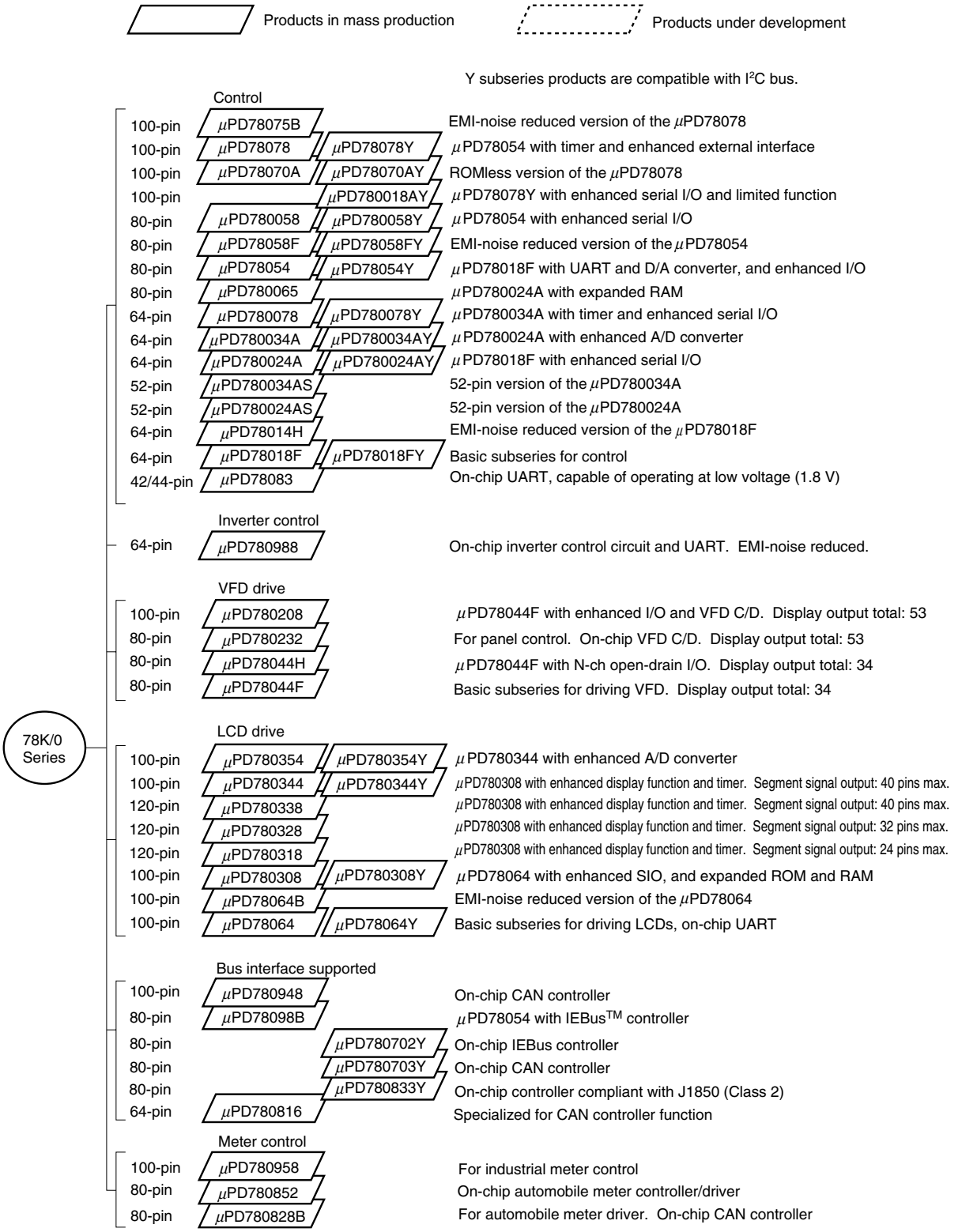

Remark VFD (Vacuum Fluorescent Display) is referred to as FIP™ (Fluorescent Indicator Panel) in some documents, but the functions of the two are the same.

The major functional differences between the subseries are listed below.

• Non-Y subseries

Subseries Name \ Function		ROM Capacity (Bytes)	Timer				8-Bit A/D	10-Bit A/D	8-Bit D/A	Serial Interface	I/O	V_{DD} MIN. Value	External Expansion
			8-Bit	16-Bit	Watch	WDT							
Control	μPD78075B	32 K to 40 K	4ch	1ch	1ch	1ch	8ch	–	2ch	3ch (UART: 1ch)	88	1.8 V	√
	μPD78078	48 K to 60 K											
	μPD78070A	–									61	2.7 V	
	μPD780058	24 K to 60 K	2ch							3ch (time-division UART: 1ch)	68	1.8 V	
	μPD78058F	48 K to 60 K								3ch (UART: 1ch)	69	2.7 V	
	μPD78054	16 K to 60 K										2.0 V	
	μPD780065	40 K to 48 K							–	4ch (UART: 1ch)	60	2.7 V	
	μPD780078	48 K to 60 K		2ch			–	8ch		3ch (UART: 2ch)	52	1.8 V	
	μPD780034A	8 K to 32 K		1ch						3ch (UART: 1ch)	51		
	μPD780024A						8ch	–					
	μPD780034AS						–	4ch			39		–
	μPD780024AS						4ch	–					
	μPD78014H						8ch			2ch	53		√
	μPD78018F	8 K to 60 K											
	μPD78083	8 K to 16 K		–	–					1ch (UART: 1ch)	33		–
Inverter control	μPD780988	16 K to 60 K	3ch	**Note**	–	1ch	–	8ch	–	3ch (UART: 2ch)	47	4.0 V	√
VFD drive	μPD780208	32 K to 60 K	2ch	1ch	1ch	1ch	8ch	–	–	2ch	74	2.7 V	–
	μPD780232	16 K to 24 K	3ch	–	–		4ch				40	4.5 V	
	μPD78044H	32 K to 48 K	2ch	1ch	1ch		8ch			1ch	68	2.7 V	
	μPD78044F	16 K to 40 K								2ch			
LCD drive	μPD780354	24 K to 32 K	4ch	1ch	1ch	1ch	–	8ch	–	3ch (UART: 1ch)	66	1.8 V	–
	μPD780344						8ch	–					
	μPD780338	48 K to 60 K	3ch	2ch			–	10ch	1ch	2ch (UART: 1ch)	54		
	μPD780328										62		
	μPD780318										70		
	μPD780308	48 K to 60 K	2ch	1ch			8ch	–	–	3ch (time-division UART: 1ch)	57	2.0 V	
	μPD78064B	32 K								2ch (UART: 1ch)			
	μPD78064	16 K to 32 K											
Bus interface supported	μPD780948	60 K	2ch	2ch	1ch	1ch	8ch	–	–	3ch (UART :1ch)	79	4.0 V	√
	μPD78098B	40 K to 60 K		1ch					2ch		69	2.7 V	–
	μPD780816	32 K to 60 K		2ch			12ch		–	2ch (UART: 1ch)	46	4.0 V	
Meter control	μPD780958	48 K to 60 K	4ch	2ch	–	1ch	–	–	–	2ch (UART: 1ch)	69	2.2 V	–
Dash-board control	μPD780852	32 K to 40 K	3ch	1ch	1ch	1ch	5ch	–	–	3ch (UART: 1ch)	56	4.0 V	–
	μPD780828B	32 K to 60K									59		

Note 16-bit timer: 2 channels
10-bit timer: 1 channel

• Y subseries

Subseries Name \ Function		ROM Capacity (Bytes)	Timer				8-Bit A/D	10-Bit A/D	8-Bit D/A	Serial Interface	I/O	V_{DD} MIN. Value	External Expansion
			8-Bit	16-Bit	Watch	WDT							
Control	μPD78078Y	48 K to 60 K	4ch	1ch	1ch	1ch	8ch	–	2ch	3ch (UART: 1ch, I^2C: 1ch)	88	1.8 V	√
	μPD78070AY	–									61	2.7 V	
	μPD780018AY	48 K to 60 K							–	3ch (I^2C: 1ch)	88		
	μPD780058Y	24 K to 60 K	2ch						2ch	3ch (time-division UART: 1ch, I^2C: 1ch)	68	1.8 V	
	μPD78058FY	48 K to 60 K								3ch (UART: 1ch, I^2C: 1ch)	69	2.7 V	
	μPD78054Y	16 K to 60 K										2.0 V	
	μPD780078Y	48 K to 60 K		2ch			–	8ch	–	4ch (UART: 2ch, I^2C: 1ch)	52	1.8 V	
	μPD780034AY	8 K to 32 K		1ch						3ch (UART: 1ch, I^2C: 1ch)	51		
	μPD780024AY						8ch	–					
	μPD78018FY	8 K to 60 K								2ch (I^2C: 1ch)	53		
LCD drive	μPD780354Y	24 K to 32 K	4ch	1ch	1ch	1ch	–	8ch	–	4ch (UART: 1ch, I^2C: 1ch)	66	1.8 V	–
	μPD780344Y						8ch	–					
	μPD780308Y	48 K to 60 K	2ch							3ch (time-division UART: 1ch, I^2C: 1ch)	57	2.0 V	
	μPD78064Y	16 K to 32 K								2ch (UART: 1ch, I^2C: 1ch)			
Bus interface supported	μPD780701Y	60 K	3ch	2ch	1ch	1ch	16ch	–	–	4ch (UART: 1ch, I^2C: 1ch)	67	3.5 V	–
	μPD780703Y												
	μPD780833Y										65	4.5 V	

Remark Functions other than the serial interface are common to both the Y and non-Y subseries.

1.7 Block Diagram

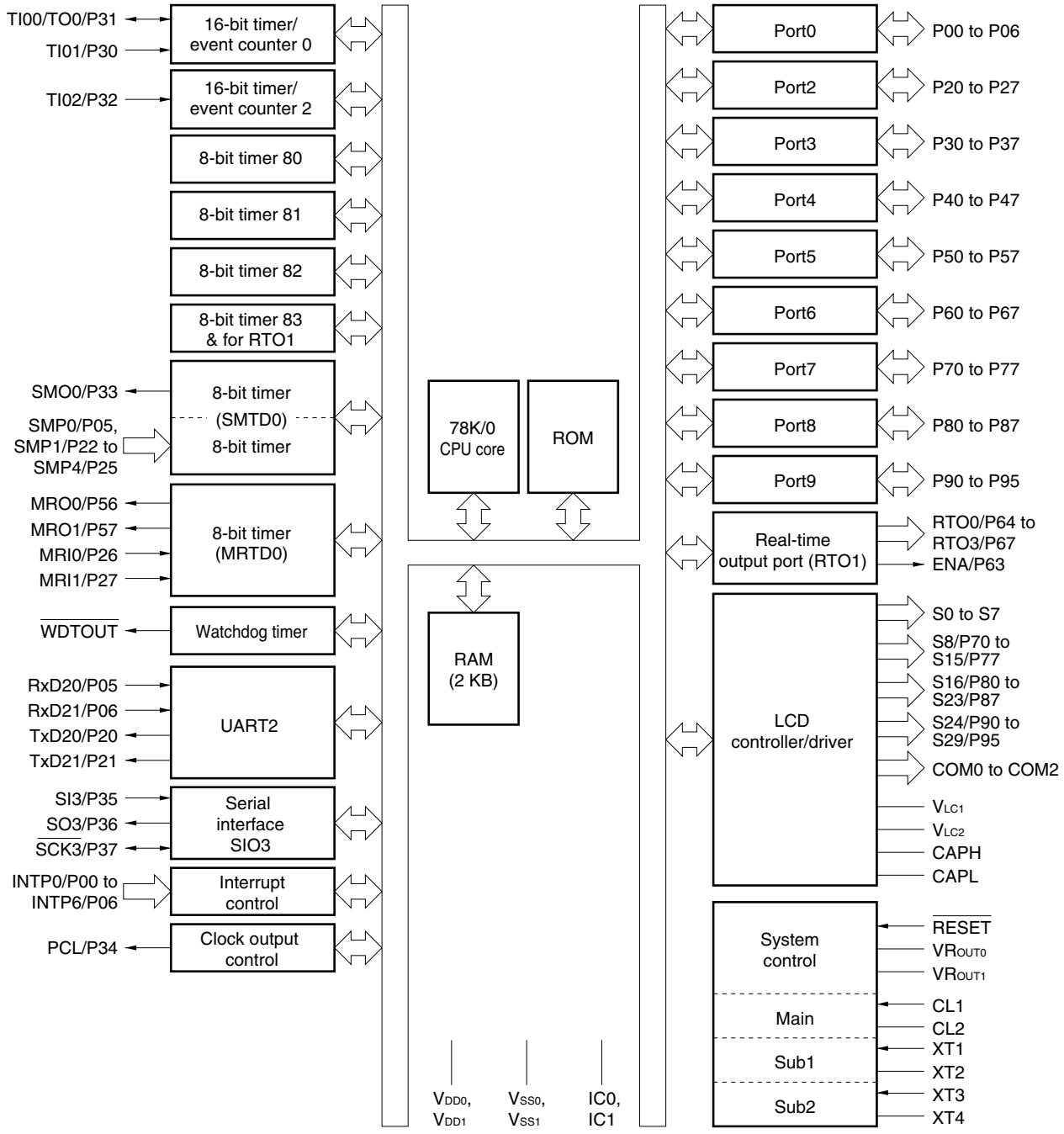

Remark The internal ROM and RAM capacities differ depending on the product.

1.8 Overview of Functions

Item \ Part Number		μPD780957(A)	μPD780958(A)
Internal memory	ROM	48 KB	60 KB
	High-speed RAM	1,024 bytes	
	Expansion RAM	1,024 bytes	
General-purpose registers		8 bits × 32 registers (8 bits × 8 registers × 4 banks)	
★ Minimum instruction execution time		Minimum instruction execution time variable function 1.7 μs/3.4 μs/6.7 μs (@ 1.2 MHz (RC oscillation) operation with main system clock) 61 μs (@ 32.768 kHz operation with subsystem clock 1)	
Instruction set		• 16-bit operation • Multiply/divide (8 bits × 8 bits, 16 bits ÷ 8 bits) • Bit manipulation (set, reset, test, Boolean operation) • BCD adjust, etc.	
I/O ports		Total: 69 • CMOS I/O: 66 • N-ch open-drain I/O: 3 (3.6 V breakdown)	
MR sampling function		MR sampling output/phase detection × 1 channel (can also be used as one interval timer with 8-bit compare register)	
Sampling function		Sampling output timer/detector × 1 channel (can also be used as two interval timers with 8-bit compare register)	
Serial interface		• UART mode (with pin switch function): 1 channel • 3-wire serial I/O mode: 1 channel	
Timer		• 16-bit timer/event counter: 2 channels • 8-bit timer: 4 channels • Watchdog timer: 1 channel	
Timer output		1 output (or 3 outputs when the sampling output function and MR sampling function are not used)	
Clock output		256 Hz, 512 Hz, 1.024 kHz, 2.048 kHz, 4.096 kHz, 8.192 kHz, 16.384 kHz, 32.768 kHz (@ 32.768 kHz operation with subsystem clock 1)	
Real-time output		4 channels (4-bit × 4 buffers)	
LCD controller/driver		30 segment signals × 3 common signals (static, 1/3 bias)	
Vectored interrupt sources	Maskable	Internal: 17, external: 12	
	Non-maskable	Internal: 1	
	Software	1	
Power supply voltage		V_{DD} = 2.2 to 3.5 V	
Operating ambient temperature		T_A = −40 to +80°C	
Package		100-pin plastic LQFP (fine-pitch) (14 × 14)	

★ The outline of the timer is as follows (for details, refer to **CHAPTER 7 16-BIT TIMER/EVENT COUNTER 0**, **CHAPTER 8 16-BIT TIMER/EVENT COUNTER 2**, **CHAPTER 9 8-BIT TIMERS 80 TO 83, CHAPTER 10 WATCHDOG TIMER**, **CHAPTER 11 SAMPLING OUTPUT TIMER/DETECTOR**, and **CHAPTER 12 MR SAMPLING FUNCTION**).

		16-Bit Timer/Event Counter 0	16-Bit Timer/Event Counter 2	8-Bit Timers 80 to 83
Operation mode	Interval timer	1 channel	1 channel	4 channels
	External event counter	1 channel	1 channel	–
Function	Timer output	1 output	–	–
	PPG output	1 output	–	–
	Pulse-width measurement	2 inputs	–	–
	Square-wave output	1 output	–	–
	Event input control function	–	1 input[Note 1]	–
	Interrupt sources	2	1	4

		Watchdog Timer	Sampling Output Timer/Detector	MR Sampling Function
Operation mode	Interval timer	1 channel[Note 2]	2 channels[Note 3]	1 channel[Note 4]
	External event counter	–	–	–
Function	Timer output	–	1 output	1 output
	PPG output	–	–	–
	Pulse-width measurement	–	–	–
	Square-wave output	–	–	–
	Event input control function	–	–	–
	Interrupt source	1	2	1

Notes 1. The event input control function is used together with 8-bit timer 82.

2. Even though the watchdog timer can function as a watchdog timer and as an interval timer, be sure to select one or the other function.

3. SMTD0 cannot function as an interval timer while it is being used for sampling output.

4. MRTD0 cannot function as an interval timer while the MR sampling function is being used.

CHAPTER 2 PIN FUNCTIONS

2.1 Pin Function List

(1) Port pins (1/2)

Pin Name	I/O	Function		After Reset	Alternate Function
P00 to P04	I/O	Port 0. 7-bit input/output port. Input/output can be specified in 1-bit units. On-chip pull-up resistors can be used by software settings.		Input	INTP0 to INTP4
P05					INTP5/SMP0/RxD20
P06					INTP6/RxD21
P20	I/O	Port 2. 8-bit input/output port. Input/output can be specified in 1-bit units. On-chip pull-up resistors can be used by software settings.		Input	TxD20
P21					TxD21
P22 to P25					SMP1 to SMP4
P26					MRI0
P27					MRI1
P30	I/O	Port 3. 8-bit input/output port. Input/output can be specified in 1-bit units. On-chip pull-up resistors can be used by software settings.		Input	TI01
P31					TI00/TO0
P32					TI2
P33					SMO0
P34					PCL
P35					SI3
P36					SO3
P37					$\overline{\text{SCK3}}$
P40 to P47	I/O	Port 4. 8-bit input/output port. Input/output can be specified in 1-bit units. On-chip pull-up resistors can be used by software settings.		Input	–
★ P50	I/O	Port 5. 8-bit input/output port. Input/output can be specified in 1-bit units. On-chip pull-up resistors can be used by software settings.	Sub-HALT test program pin[Note].	Input	–
P51 to P55					
P56					MRO0
P57					MRO1
P60 to P62	I/O	Port 6. 8-bit input/output port. Input/output can be specified in 1-bit units.	N-ch open-drain I/O port (3.6 V breakdown). On-chip pull-up resistor connection can be specified by means of mask option.	Input	–
P63			On-chip pull-up resistors can be used by software settings.		ENA
P64 to P67					RTO0 to RTO3

Note Refer to **CHAPTER 22 SUB-HALT TEST PROGRAM**.

(1) Port pins (2/2)

Pin Name	I/O	Function	After Reset	Alternate Function
P70 to P77	I/O	Port 7. 8-bit input/output port. Input/output can be specified in 1-bit units. On-chip pull-up resistors can be used by software settings.	Input	S8 to S15
P80 to P87	I/O	Port 8. 8-bit input/output port. Input/output can be specified in 1-bit units. On-chip pull-up resistors can be used by software settings.	Input	S16 to S23
P90 to P95	I/O	Port 9. 6-bit input/output port. Input/output can be specified in 1-bit units. On-chip pull-up resistors can be used by software settings.	Input	S24 to S29

(2) Non-port pins (1/2)

Pin Name	I/O	Function	After Reset	Alternate Function
INTP0 to INTP4	Input	External interrupt request input for which the valid edge (rising edge, falling edge, or both rising and falling edges) can be specified.	Input	P00 to P04
INTP5				P05/SMP0/RxD20
INTP6				P06/RxD21
RxD20	Input	Serial data input for asynchronous serial interface UART2.	Input	P05/INTP5/SMP0
RxD21		Serial data input (pin for switching) for asynchronous serial interface UART2.		P06/INTP6
TxD20	Output	Serial data output for asynchronous serial interface UART2.	Input	P20
TxD21		Serial data output (pin for switching) for asynchronous serial interface UART2.		P21
SMP0	Input	Sampling input.	Input	P05/INTP5/RxD20
SMP1 to SMP4				P22 to P25
SMO0	Output	Sampling output.	Input	P33
MRI0	Input	Phase detection input.	Input	P26
MRI1				P27
MRO0	Output	MR sampling output.	Input	P56
MRO1				P57
TI00	Input	External clock count input to 16-bit timer/event counter 0. Capture trigger input to 16-bit timer/event counter 0 capture register (CR00/CR01).	Input	P31/TO0
TI01		Capture trigger input to 16-bit timer/event counter 0 capture register (CR00).		P30
TI2		External count clock input to 16-bit timer/event counter 2.		P32
TO0	Output	16-bit timer output.	Input	P31/TI00
SI3	Input	Serial interface SIO3 serial data input.	Input	P35
SO3	Output	Serial interface SIO3 serial data output.	Input	P36
$\overline{\text{SCK3}}$	I/O	Serial interface SIO3 serial clock input/output.	Input	P37
PCL	Output	Clock output (for subsystem clock 1 trimming).	Input	P34
S0 to S7	Output	LCD controller segment signal output.	Output	–
S8 to S15			Input	P70 to P77
S16 to S23				P80 to P87
S24 to S29				P90 to P95
COM0 to COM2	Output	LCD controller common signal output.	Output	–
ENA	Output	Real-time output enable signal output.	Input	P63
RTO0 to RTO3	Output	Real-time output port that outputs data in synchronization with a trigger.	Input	P64 to P67
$\overline{\text{WDTOUT}}$	Output	Watchdog timer overflow output.	Output	–
★ $\overline{\text{RESET}}$	Input	System reset input. On-chip pull-up resistor connection can be specified by means of mask option.	–	–

(2) Non-port pins (2/2)

Pin Name	I/O	Function	After Reset	Alternate Function
CL1	Input	Connection of resonator (R) and capacitor (C) for main system clock oscillation.	–	–
CL2	–		–	–
XT1	Input	Connection of crystal resonator for subsystem clock 1 oscillation.	–	–
XT2	–		–	–
XT3	Input	Connection of crystal resonator for subsystem clock 2 oscillation.	–	–
XT4	–		–	–
V_{DD0}	–	Positive power supply for ports.	–	–
V_{DD1}	–	Positive power supply (except for ports).	–	–
V_{SS0}	–	Ground potential for ports.	–	–
V_{SS1}	–	Ground potential (except for ports).	–	–
V_{LC1}, V_{LC2}	–	Positive power supply for LCD controller.	–	–
VR_{OUT0}, VR_{OUT1}	–	Connection of capacitor for internal regulator.	–	–
CAPH, CAPL	–	Connection of capacitor for LCD controller.	–	–
IC0, IC1	–	Connected internally. Connect directly to V_{SS0} or V_{SS1}.	–	–

2.2 Description of Pin Functions

(1) P00 to P06 (Port 0)

P00 to P06 function as a 7-bit I/O port. Besides serving as input/output port pins, P00 to P06 have alternate functions as the external interrupt input pins, data input pins for serial interface UART2, and sampling clock input pin.

P00 to P06 can be set to the following operation modes in 1-bit units.

(a) Port mode

In this mode, P00 to P06 function as a 7-bit I/O port. Input/output can be specified for P00 to P06 in 1-bit units by setting port mode register 0 (PM0).

An on-chip pull-up resistor can be connected to each pin by setting pull-up resistor option register 0 (PU0).

(b) Control mode

In this mode, P00 to P06 function as the external interrupt request inputs (INTP0 to INTP6), UART2 data inputs (RxD20 and RxD21), and sampling clock input (SMP0).

<1> INTP0 to INTP6

INTP0 to INTP6 are external interrupt request input pins for which the valid edge (rising edge, falling edge, or both rising and falling edges) can be specified.

<2> RxD20 and RxD21

UART2 data input pins.

<3> SMP0

Sampling clock input pin.

(2) P20 to P27 (Port 2)

P20 to P27 function as an 8-bit I/O port. Besides serving as input/output port pins, P20 to P27 have has alternate functions as the serial interface UART2 data outputs, sampling clock inputs, and MR sampling inputs.

P20 to P27 can be set to the following operation modes in 1-bit units.

(a) Port mode

In this mode, P20 to P27 function as an 8-bit I/O port. Input/output can be specified for P20 to P27 in 1-bit units by setting port mode register 2 (PM2).

An on-chip pull-up resistor can be connected to each pin by setting pull-up resistor option register 2 (PU2).

(b) Control mode

In this mode, P20 to P27 function as UART2 data outputs (TxD20 and TxD21), sampling clock inputs (SMP1 to SMP4), and MR sampling inputs (MRI0 and MRI1).

<1> TxD20 and TxD21

UART2 data output pins.

<2> SMP1 to SMP4

Sampling clock input pins.

<3> MRI0 and MRI1

MR sampling input pins.

(3) P30 to P37 (Port 3)

P30 to P37 function as an 8-bit I/O port. Besides serving as input/output port pins, P30 to P37 have alternate functions as the external count clock inputs, capture trigger inputs, timer output, serial interface SIO3 data I/O, serial clock I/O, and sampling clock output.

P30 to P37 can be set to the following operation modes in 1-bit units.

(a) Port mode

In this mode, P30 to P37 function as an 8-bit I/O port. Input/output can be specified for P30 to P37 in 1-bit units by setting port mode register 3 (PM3).

An on-chip pull-up resistor can be connected to each pin by setting pull-up resistor option register 3 (PU3).

P30 and P31 function as the 16-bit timer/event counter's capture trigger signal input pins (TI00 and TI01) by inputting the valid edge.

(b) Control mode

In this mode, P30 to P37 function as the external count clock inputs, capture trigger inputs, timer output, serial interface data I/O, serial clock I/O, and sampling clock output.

<1> TI00

This is an input pin for the external count clock that is supplied to 16-bit timer/event counter 0 (TM0). It also functions as a capture trigger signal input pin for TM0's capture registers (CR00, CR01).

<2> TI01

This is a capture trigger signal input pin for the TM0 capture register (CR00).

<3> TI2

This is an external count clock input pin for 16-bit timer/event counter 2 (TM2).

<4> TO0

Timer output pin.

<5> PCL

Clock output pin.

<6> SI3 and SO3

Serial interface SIO3 serial data input and output pins.

<7> $\overline{\text{SCK3}}$

Serial interface SIO3 serial clock input/output pin.

<8> SMO0

Sampling clock data output pin.

(4) P40 to P47 (Port 4)

P40 to P47 function as an 8-bit I/O port. Input/output can be specified for P40 to P47 in 1-bit units by setting port mode register 4 (PM4).

An on-chip pull-up resistor can be connected to each pin by setting pull-up resistor option register 4 (PU4).

(5) P50 to P57 (Port 5)

P50 to P57 function as an 8-bit I/O port. Besides serving as input/output port pins, P50 to P57 have an alternate function as the MR sampling data outputs.

This port can be set to the following operation modes in 1-bit units.

(a) Port mode

In this mode, P50 to P57 function as an 8-bit I/O port. Input/output can be specified for P50 to P57 in 1-bit units by setting port mode register 5 (PM5).

An on-chip pull-up resistor can be connected to each pin by setting pull-up resistor option register 5 (PU5).

P56 and P57 function as MR sampling data output pins (MRO0 and MRO1) by inputting the valid edge.

(b) Control mode

In this mode, P56 and P57 function as the MR sampling data output pins.

- **MRO0 and MRO1**

  MR sampling data output pins.

★ **Remark** P50 uses the sub-HALT test program prior to execution (refer to **CHAPTER 22 SUB-HALT TEST PROGRAM** for details).

(6) P60 to P67 (Port 6)

P60 to P67 function as an 8-bit I/O port. Besides serving as input/output port pins, P60 to P67 have alternate functions as the real-time output ports and real-time output enable signal output.

P60 to P67 can be set to the following operation modes in 1-bit units.

(a) Port mode

In this mode, P60 to P67 function as an 8-bit I/O port. Input/output can be specified for P60 to P67 in 1-bit units by setting port mode register 6 (PM6). P60 to P62 are N-ch open-drain I/O pins. For mask-ROM versions, an on-chip pull-up resistor can be connected to each pin by a mask option.

For P63 to P67, connection of an on-chip pull-up resistor can also be specified by setting pull-up resistor option register 6 (PU6).

(b) Control mode

In this mode, P60 to P67 function as the real-time outputs and real-time output enable signal output.

<1> RTO0 to RTO3

These are real-time output ports, which output data in synchronization with a trigger.

<2> ENA

This is an enable signal output pin for real-time output.

(7) P70 to P77 (Port 7)

P70 to P77 function as an 8-bit I/O port. Besides serving as input/output port pins, P70 to P77 have an alternate function as the LCD controller's segment signal outputs.

P70 to P77 can be set to the following operation modes in 1-bit units.

(a) Port mode

In this mode, P70 to P77 function as an 8-bit I/O port. Input/output can be specified for P70 to P77 in 1-bit units by setting port mode register 7 (PM7).

An on-chip pull-up resistor can be connected to each pin by setting pull-up resistor option register 7 (PU7).

(b) Control mode

In this mode, P70 to P77 function as the LCD controller's segment signal outputs.

Whether each P70 to P77 function as an I/O port pin or a segment signal output can be specified by setting port function control register 7 (PF7).

- **S8 to S15**

  LCD controller's segment signal output pins.

(8) P80 to P87 (Port 8)

P80 to P87 function as an 8-bit I/O port. Besides serving as input/output port pins, P80 to P87 have an alternate function as the LCD controller's segment signal outputs.

P80 to P87 can be set to the following operation modes in 1-bit units.

(a) Port mode

In this mode, P80 to P87 function as an 8-bit I/O port. Input/output can be specified for P80 to P87 in 1-bit units by setting port mode register 8 (PM8).

An on-chip pull-up resistor can be connected to each pin by setting pull-up resistor option register 8 (PU8).

(b) Control mode

In this mode, P80 to P87 function as the LCD controller's segment signal outputs.

Whether P80 to P87 function as an I/O port pin or a segment signal output can be specified by setting port function control register 8 (PF8).

- **S16 to S23**

  LCD controller's segment signal output pins.

(9) P90 to P95 (Port 9)

P90 to P95 function as a 6-bit I/O port. Besides serving as input/output port pins, P90 to P95 have an alternate function as the LCD controller's segment signal outputs.

This port can be set to the following operation modes in 1-bit units.

(a) Port mode

In this mode, P90 to P95 function as a 6-bit I/O port. Input/output can be specified for P90 to P95 in 1-bit units by setting port mode register 9 (PM9).

An on-chip pull-up resistor can be connected to each pin by setting pull-up resistor option register 9 (PU9).

(b) Control mode

In this mode, P90 to P95 function as the LCD controller's segment signal outputs.

Whether P90 to P95 function as an I/O port pin or a segment signal output can be specified by setting port function control register 9 (PF9).

- **S24 to S29**

  LCD controller's segment signal output pins.

(10) $\overline{\text{RESET}}$

★ This is the low-level active system reset input pin. Connection of an internal pull-up resistor can be specified by a mask option.

(11) CL1 and CL2

These are the resistor (R) and capacitor (C) connection pins for main system clock oscillation.

(12) XT1 and XT2

These are the crystal resonator connection pins for subsystem clock 1 oscillation.

(13) XT3 and XT4

These are the crystal resonator connection pins for subsystem clock 2 oscillation.

When inputting an external clock, input it to XT3 and input its inverted signal to XT4.

(14) V_{DD0} and V_{DD1}

V_{DD0} is the positive power supply pin for ports.

V_{DD1} is the positive power supply pin for other than ports.

(15) V_{SS0} and V_{SS1}

V_{SS0} is the ground potential pin for ports.

V_{SS1} is the ground potential pin for other than ports.

(16) $\overline{\text{WDTOUT}}$

This is the watchdog timer overflow output pin.

(17) CAPH

This is a capacitor connection pin for the LCD controller's power supply.

(18) CAPL

This is a capacitor connection pin for the LCD controller's power supply.

Figure 2-1. Recommended Connection Example of CAPH and CAPL (3-Time Division Bias Mode)

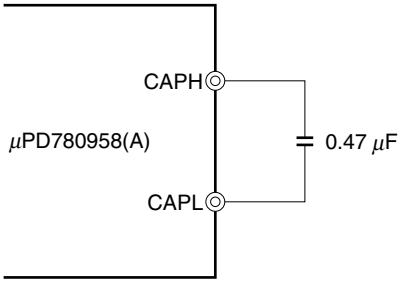

(19) V_{LC1}

This is LCD controller power supply connection pin 1.

(20) V_{LC2}

This is LCD controller power supply connection pin 2.

Figure 2-2. Recommended Connection Example of V_{LC1} and V_{LC2} (3-Time Division Bias Mode)

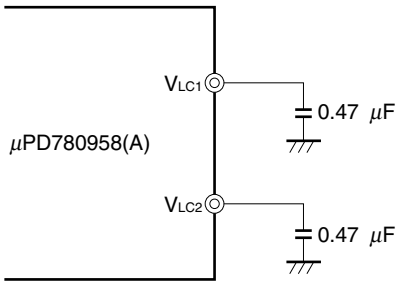

(21) VR_{OUT0}

This is a capacitor connection pin for the on-chip regulator.

(22) VR_{OUT1}

This is a capacitor connection pin for the on-chip regulator.

★ **Figure 2-3. Connection Example of VR_{OUT0} and VR_{OUT1}**

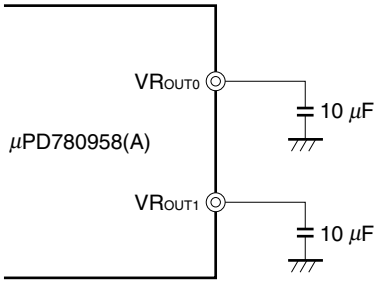

(23) IC0 and IC1

The IC (Internally Connected) pin is provided to set the test mode to check the μPD780958 Subseries products at shipment. Connect these pins directly to V_{SS0} or V_{SS1} with the shortest possible wire when in the normal operation mode.

When a voltage difference occurs between the IC pin and V_{SS0} or V_{SS1} because the wiring between those two pins is too long or external noise is input to the IC pin, the user program may not run normally.

Caution Connect the IC0 and IC1 pins to V_{SS0} or V_{SS1} directly.

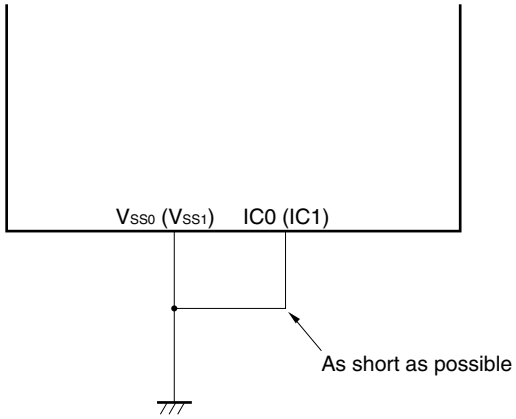

(24) COM0 to COM2

These are the LCD controller's common signal output pins.

(25) S0 to S29

These are the LCD controller's segment signal output pins.

S8 to S15 are the alternate functions of P70 to P77 (port 7). Similarly, S16 to S23 are the alternate functions of P80 to P87 (port 8) and S24 to S29 are those of P90 to P95 (port 9).

2.3 Pin I/O Circuits and Recommended Connection of Unused Pins

Table 2-1 shows the pin I/O circuit types and the recommended connection of unused pins.
Refer to Figure 2-4 for the configuration of the I/O circuit of each type.

★ **Table 2-1. Types of Pin I/O Circuits**

Pin Name	I/O Circuit Type	I/O	Recommended Connection of Unused Pins
P00/INTP0 to P04/INTP4	8-C	I/O	Input: Independently connect to V_{SS0} or V_{SS1} via a resistor. Output: Leave open.
P05/INTP5/SMP0/RxD20			
P06/INTP6/RxD21			
P20/TxD20	5-H		Input: Independently connect to V_{DD0}, V_{DD1}, V_{SS0}, or V_{SS1} via a resistor. Output: Leave open.
P21/TxD21			
P22/SMP1 to P25/SMP4	8-C		
P26/MRI0			
P27/MRI1			
P30/TI01			
P31/TI00/TO0			
P32/TI2			
P33/SMO0	5-H		
P34/PCL			
P35/SI3	8-C		
P36/SO3	5-H		
P37/$\overline{SCK3}$	8-C		
P40 to P47	5-H		
P50 to P55			
P56/MRO0	5-S		
P57/MRO1			
P60 to P62	13-Q		Input: Connect directly to V_{SS0} or V_{SS1}. Output: Leave open for low-level output.
P63/ENA	5-H		Input: Independently connect to V_{DD0}, V_{DD1}, V_{SS0}, or V_{SS1} via a resistor. Output: Leave open.
P64/RTO0 to P67/RTO3			
P70/S8 to P77/S15	17-C		
P80/S16 to P87/S23			
P90/S24 to P95/S29			
S0 to S7	17-B	Output	Leave open.
COM0 to COM2	18-A		
$\overline{WDTOUT}$	13-AC		
$\overline{RESET}$	2-D	Input	–
CAPL, V_{LC1}, V_{LC2}	–	–	Independently connect to GND via a resistor.
CAPH	–	–	Independently connect to V_{DD0} or V_{DD1} via a resistor.
IC0 and IC1	–	–	Connect directly to V_{SS0} or V_{SS1} via a resistor.

Remark I/O circuit type numbers in the table above are not in series because these numbers are common to the 78K Series (i.e., some I/O circuits may not be employed depending on products).

Figure 2-4. Pin I/O Circuits (1/2)

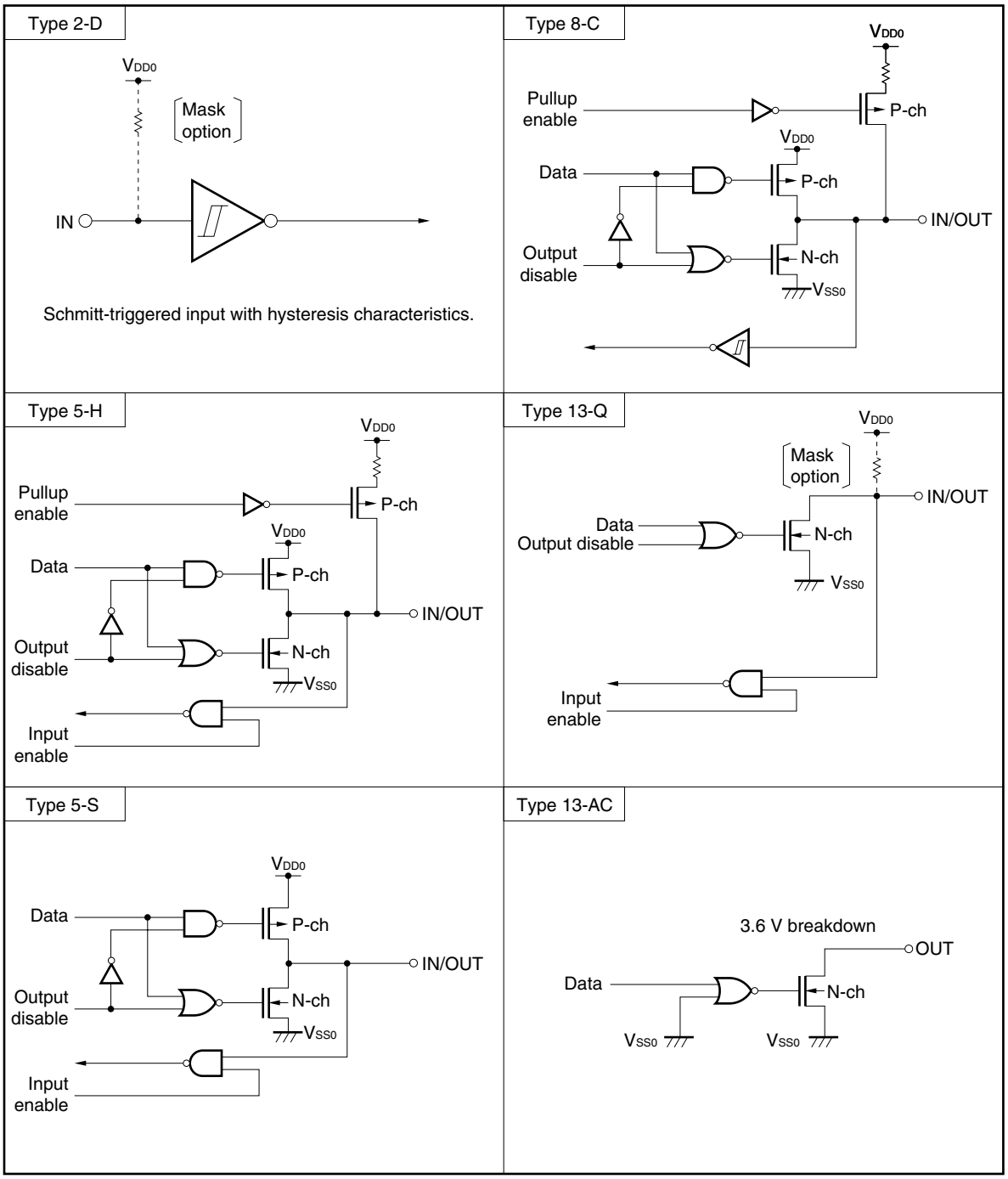

Figure 2-4. Pin I/O Circuits (2/2)

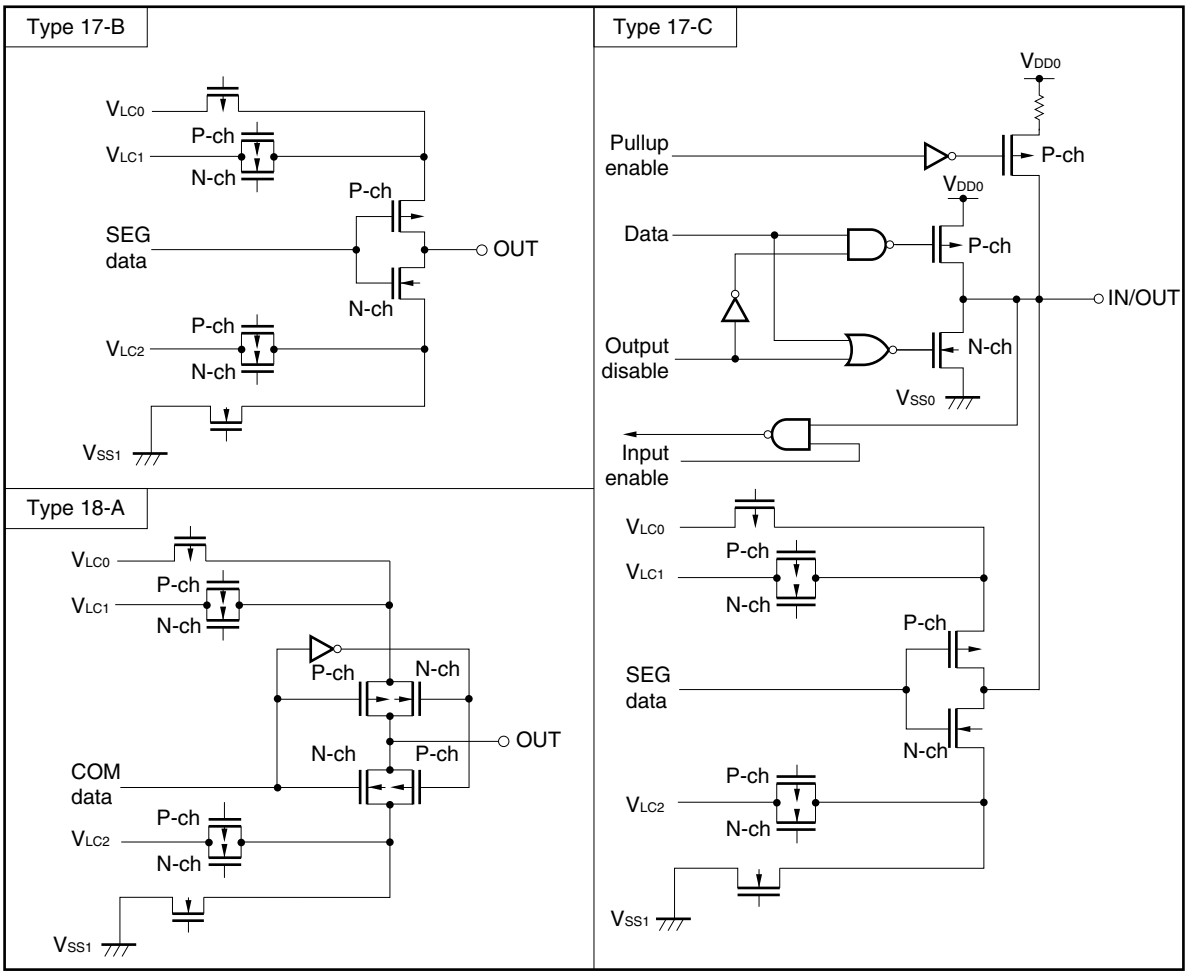

CHAPTER 3 CPU ARCHITECTURE

3.1 Memory Space

The μPD780958 Subseries can access a 64 KB memory space (special-function registers and internal RAM). Figures 3-1 and 3-2 show the memory maps.

Caution As the program initial setting, be sure to set the values shown in the table below to the memory size switching register (IMS) and internal expansion RAM size switching register (IXS).

	IMS Setting Value	IXS Setting Value
μPD780957(A)	CCH	0AH
μPD780958(A)	CFH[Note]	

Note This value is the initial value of IMS. Therefore, it is not necessary to set IMS again for the μPD780958(A).

Figure 3-1. Memory Map (for μPD780957(A))

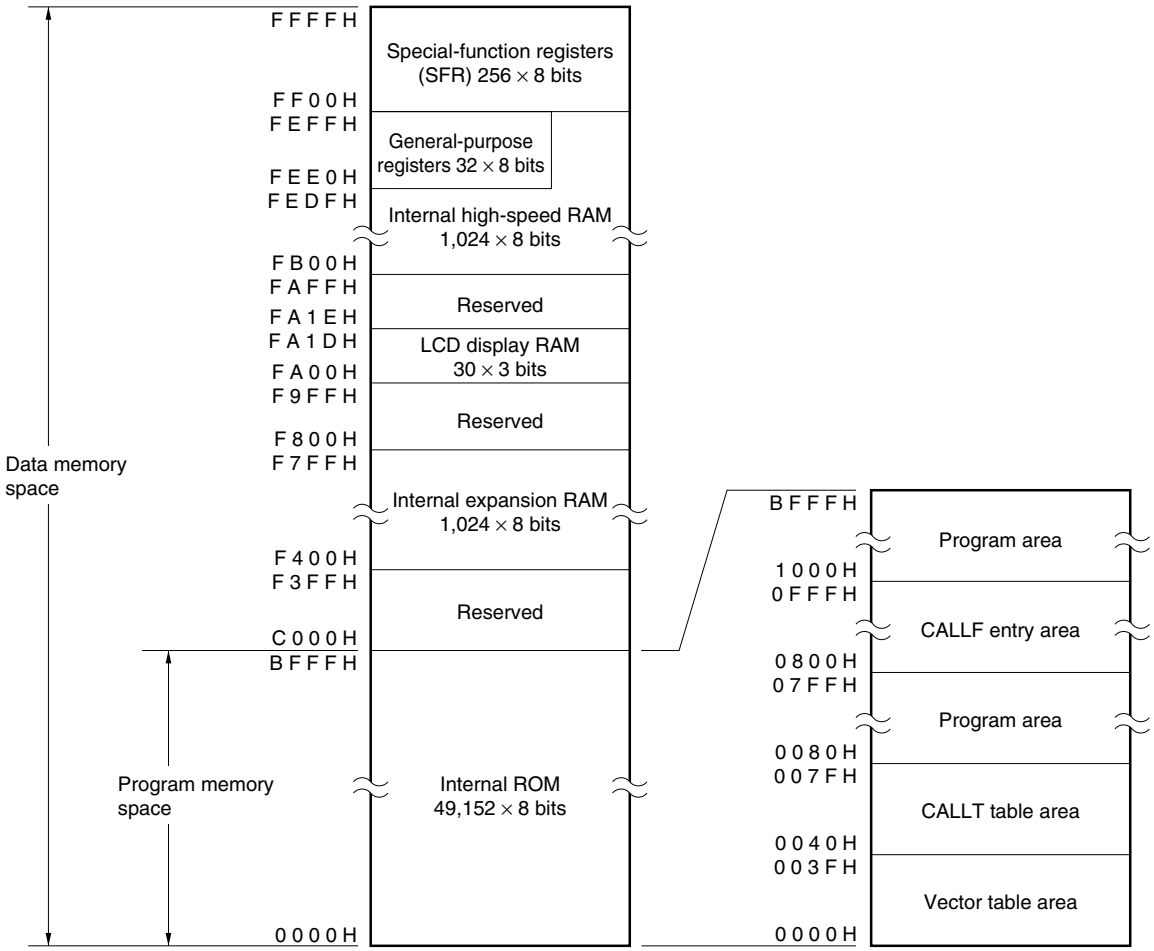

Figure 3-2. Memory Map (for μPD780958(A))

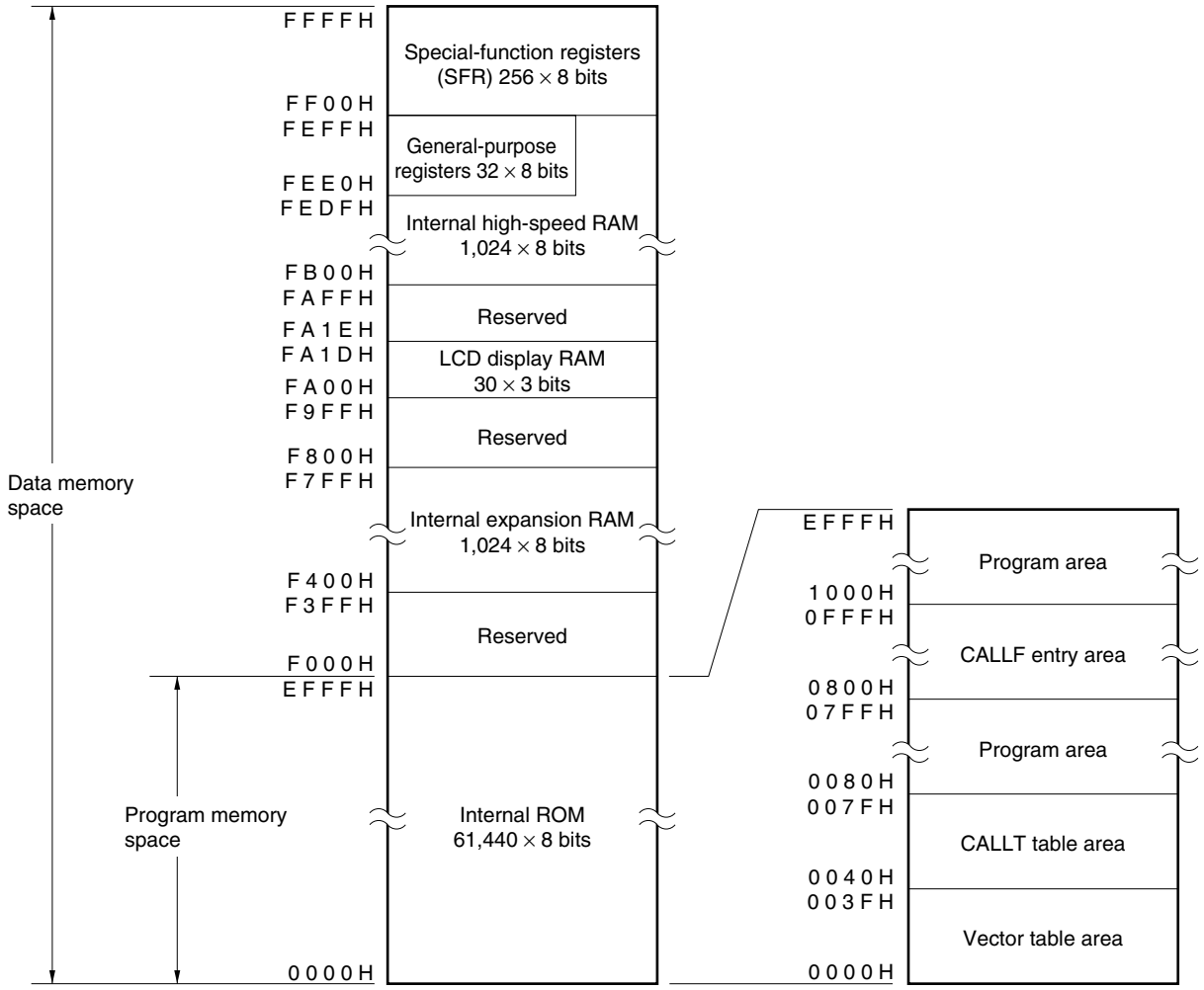

3.1.1 Internal program memory space

The internal program memory space stores program data and table data. This space is generally accessed using the program counter (PC).

The μPD780958 Subseries has internal ROM (or flash memory) whose capacity differs depending on the product.

Table 3-1. Internal Memory Capacity

Product Name	Capacity
μPD780957(A)	49,152 × 8 bits (0000H to BFFFH)
μPD780958(A)	61,440 × 8 bits (0000H to EFFFH)

The following areas are allocated to the internal program memory space.

(1) Vector table area

The 64-byte area of addresses 0000H to 003FH is reserved as a vector table area. This area stores the program start addresses to which an executing program branches when the $\overline{\text{RESET}}$ signal is input or when an interrupt request is generated.

Of the 16-bit program start address, the lower 8 bits are stored in even addresses and the higher 8 bits are stored in odd addresses.

Table 3-2. Vector Table

Vector Table Address	Interrupt Source	Vector Table Address	Interrupt Source
0000H	$\overline{\text{RESET}}$ input	0022H	INTMRT0
0004H	INTWDT	0024H	INTTM80
0006H	INTP0	0026H	INTTM81
0008H	INTMRO0	0028H	INTTM82
000AH	INTP1	002AH	INTTM83
000CH	INTP2	002CH	INTTM2
000EH	INTP3	002EH	INTSA0
0010H	INTP4	0030H	INTSB0
0012H	INTP5	0032H	INTRTO1
0014H	INTP6	0034H	INTSMP0
0016H	INTTM00	0036H	INTSMP1
0018H	INTTM01	0038H	INTSMP2
001AH	INTSER2	003AH	INTSMP3
001CH	INTSR2	003CH	INTSMP4
001EH	INTST2	003EH	BRK instruction
0020H	INTCSI3		

(2) CALLT instruction table area

The 64-byte area of addresses 0040H to 007FH can store the subroutine entry address of a 1-byte call instruction (CALLT).

(3) CALLF instruction table area

From the 2 KB area of addresses 0800H to 0FFFH, a subroutine can be directly called using a 2-byte call instruction (CALLF).

3.1.2 Internal data memory space

The μPD780958 Subseries has the following internal RAMs.

(1) Internal high-speed RAM

The internal high-sped RAM is allocated to the 1024-byte area of FB00H to FEFFH. In this area, four banks of general-purpose registers, each bank consisting of eight 8-bit registers, are allocated to the 32-byte area of FEE0H to FEFFH.

★ Instructions cannot be written and executed using this RAM as a program area.

The internal high-speed RAM can also be used as a stack memory.

(2) Internal expansion RAM

The internal expansion RAM is allocated to the 1024-byte area of F400H to F7FFH.

★ The internal expansion RAM can be used as a normal data area in the same way as the internal high-speed RAM.

This RAM can also be used for writing and execution as a program area.

(3) LCD display RAM

The LCD display RAM is allocated to the 30 × 3-bit area of FA00H to FA10H. The LCD display RAM can be used as normal RAM.

3.1.3 Special-function register (SFR) area

The special-function registers (SFRs) of the on-chip peripheral hardware are allocated to the 256-byte area of addresses FF00H to FFFFH (refer to **Table 3-3 List of Special-Function Registers** in **3.2.3 Special-function registers (SFRs)**).

Caution Do not access an address where an SFR is not allocated.

3.1.4 Data memory addressing

Addressing is used to specify the address of the instruction to be executed next or the address of a register or memory to be manipulated when an instruction is executed.

The address of the instruction to be executed next is specified by the program counter (PC) (for details, refer to **3.3 Addressing Instruction Address**).

To specify the address in the memory to be manipulated when an instruction is executed, the μPD780958 Subseries is provided with many addressing modes to improve operability. In the area that incorporates data memory especially (FB00H to FFFFH), specific addressing modes that correspond to the particular functions of an area, such as the special-function registers (SFR) or general-purpose registers, are available. Figures 3-3 and 3-4 show the data memory addressing modes. For details of each kind of addressing, refer to **3.4 Addressing of Operand Address**.

Figure 3-3. Data Memory Addressing (μPD780957(A))

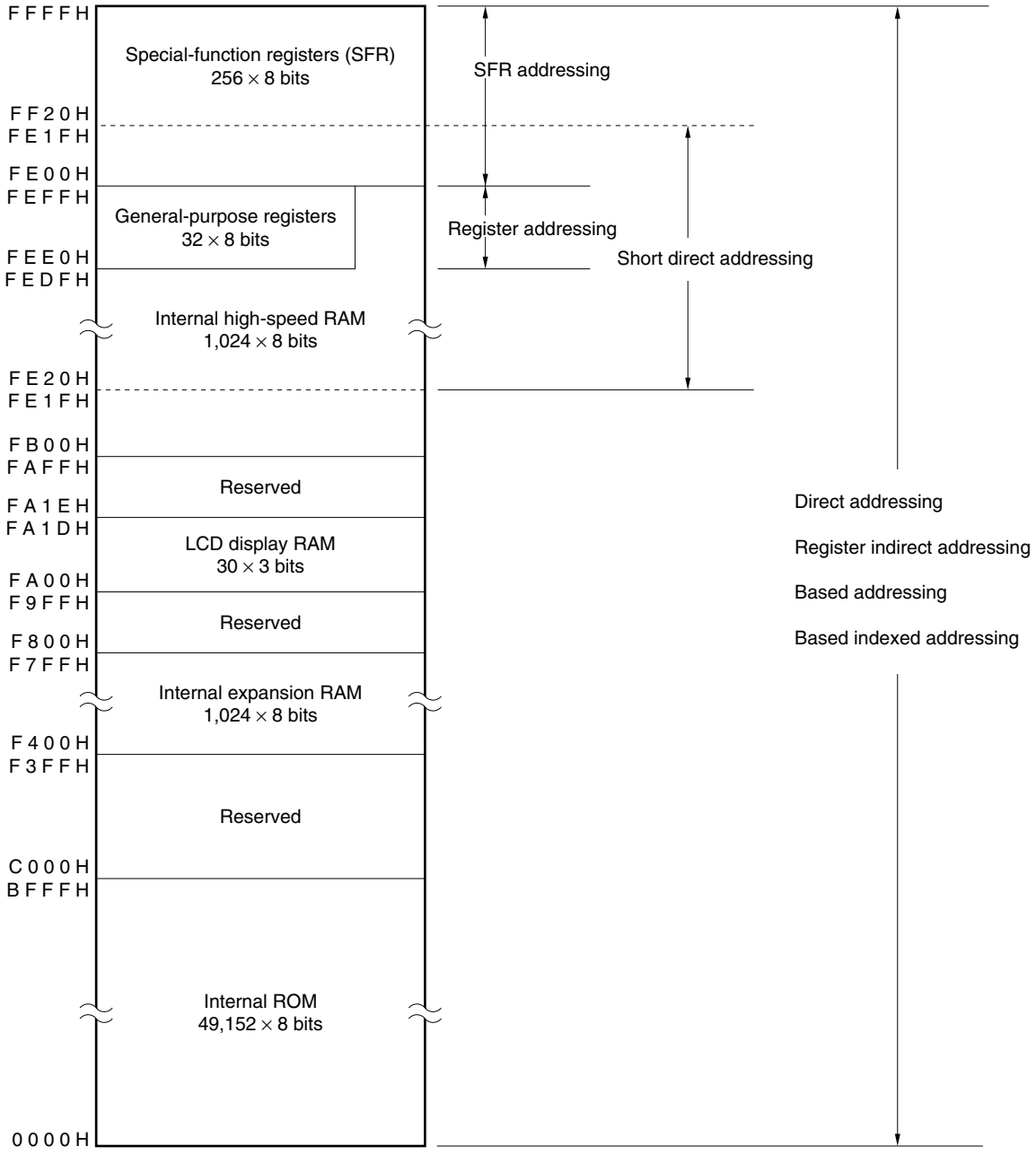

Figure 3-4. Data Memory Addressing (μPD780958(A))

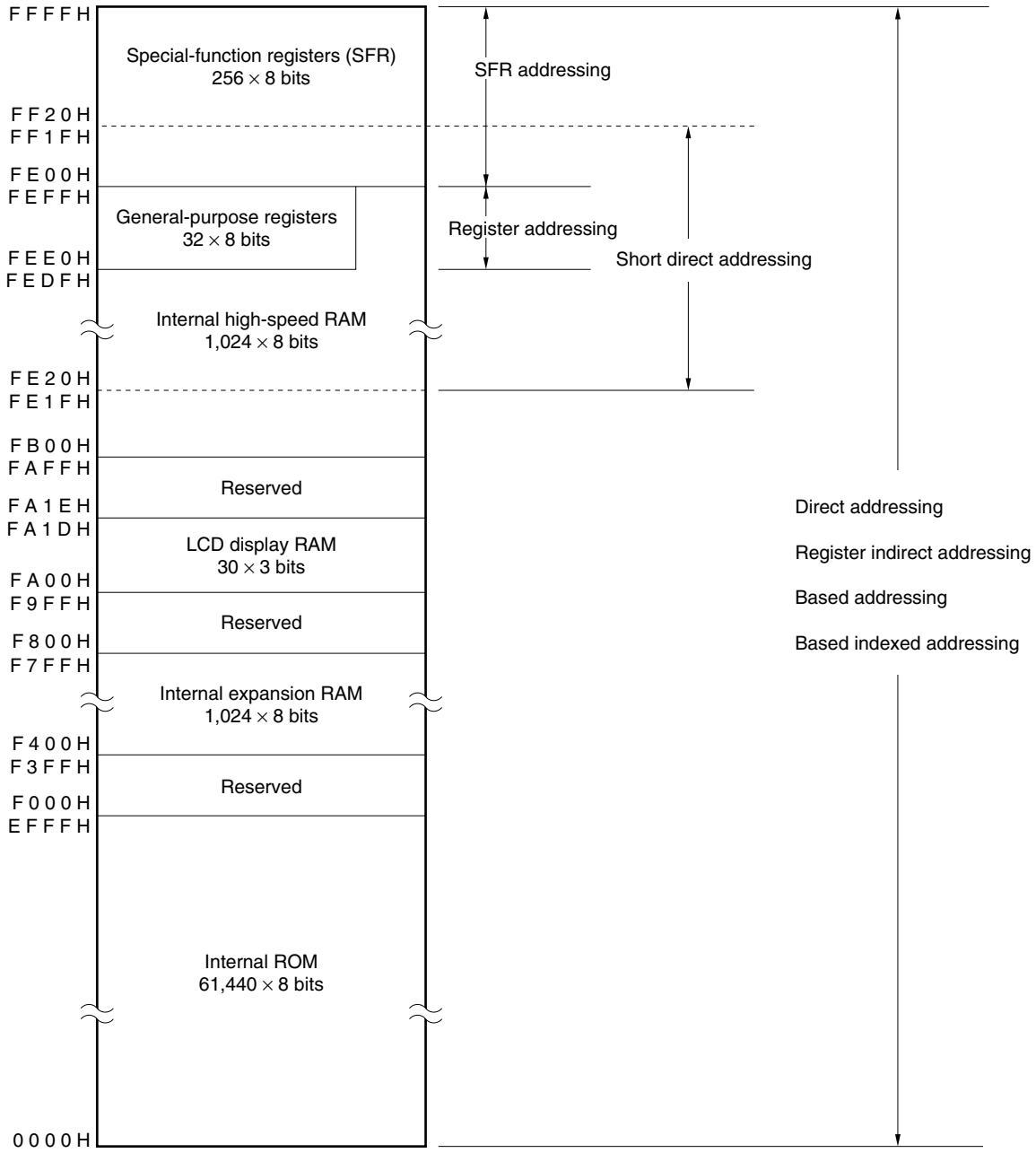

3.2 Processor Registers

The μPD780958 Subseries is provided with the following processor registers.

3.2.1 Control registers

Each of these registers has a dedicated function such as controlling the program sequence, status, and stack memory. The control registers consist of the program counter (PC), program status word (PSW), and stack pointer (SP).

(1) Program counter (PC)

The program counter is a 16-bit register that holds the address information of the next program to be executed.

In normal operation, the contents of the PC are automatically incremented according to the number of bytes of the instruction to be fetched. When a branch instruction is executed, immediate data or register contents are set to the PC.

When the $\overline{\text{RESET}}$ signal is input, the value of the reset vector table at addresses 0000H and 0001H is set to the PC.

Figure 3-5. Format of Program Counter

	15															0
PC	PC15	PC14	PC13	PC12	PC11	PC10	PC9	PC8	PC7	PC6	PC5	PC4	PC3	PC2	PC1	PC0

(2) Program status word (PSW)

The program status word is an 8-bit register consisting of flags that are set or reset as a result of instruction execution.

The contents of the program status word are automatically pushed to the stack when an interrupt request generated or when the PUSH PSW instruction is executed, and are automatically popped from the stack when the RETB, RETI, or POP PSW instruction is executed.

When the $\overline{\text{RESET}}$ signal is input, the contents of the PSW are set to 02H.

Figure 3-6. Format of Program Status Word

	7							0
PSW	IE	Z	RBS1	AC	RBS0	0	ISP	CY

(a) Interrupt enable flag (IE)

This flag controls the acknowledgement of an interrupt request by the CPU.

When IE = 0, all interrupt requests except non-maskable interrupts are disabled (DI status).

When IE = 1, interrupts are enabled (EI status). At this time, acknowledgement of interrupt requests is controlled with an in-service priority flag (ISP), an interrupt mask flag for various interrupt sources, and a priority specification flag.

The interrupt enable flag is reset to 0 when the DI instruction is executed or when an interrupt is acknowledged, and set to 1 when the EI instruction is executed.

(b) Zero flag (Z)

This flag is set to 1 when the result of an operation performed is 0; otherwise it is reset to 0.

(c) Register bank select flags (RBS0 and RBS1)

These 2-bit flags select one of the four register banks.

Information of 2 bits that indicates the register bank selected by execution of the “SEL RBn” instruction is stored in these flags.

(d) Auxiliary carry flag (AC)

This flag is set to 1 when a carry occurs from bit 3 or a borrow to bit 3 occurs as a result of an operation performed; otherwise it is reset to 0.

(e) In-service priority flag (ISP)

This flag controls the priority of maskable vectored interrupts that can be acknowledged. When ISP = 0, the vectored interrupt request whose priority is specified by the priority specification flag registers (PR0L, PR0H, PR1L, PR1H) (refer to **17.3 (3) Priority specification flag registers (PR0L, PR0H, PR1L, PR1H)**) as low is disabled. Whether the interrupt request is actually acknowledged is controlled by the status of the interrupt enable flag (IE).

(f) Carry flag (CY)

This flag records an overflow or underflow that occurs as the result of executing an add or subtract instruction. It also records the value shifted out when a rotate instruction is executed. In addition, it also functions as a bit accumulator when a bit operation instruction is executed.

(3) Stack pointer (SP)

This is a 16-bit register that holds the first address of the stack area in the memory. Only the internal high-speed RAM area (FB00H to FEFFH) can be specified as the stack area.

Figure 3-7. Format of Stack Pointer

	15															0
SP	SP15	SP14	SP13	SP12	SP11	SP10	SP9	SP8	SP7	SP6	SP5	SP4	SP3	SP2	SP1	SP0

The contents of the stack pointer are decremented when data is written (saved) to the stack memory, and incremented when data is read (restored) from the stack memory.

The data saved/restored as a result of each stack operation is as shown in Figures 3-8 and 3-9.

Caution The contents of the SP become undefined when the $\overline{\text{RESET}}$ signal is input. Be sure to initialize the SP before executing an instruction.

Figure 3-8. Data Saved to Stack Memory

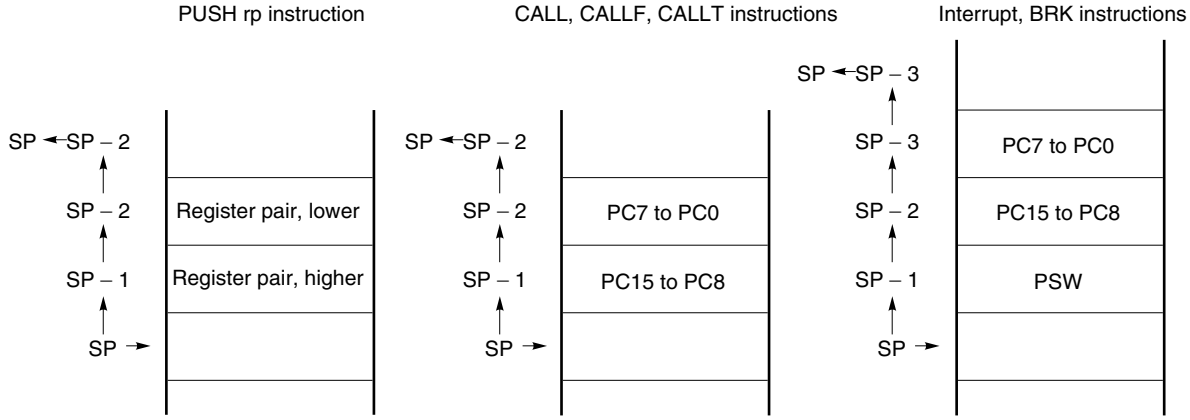

Figure 3-9. Data Restored from Stack Memory

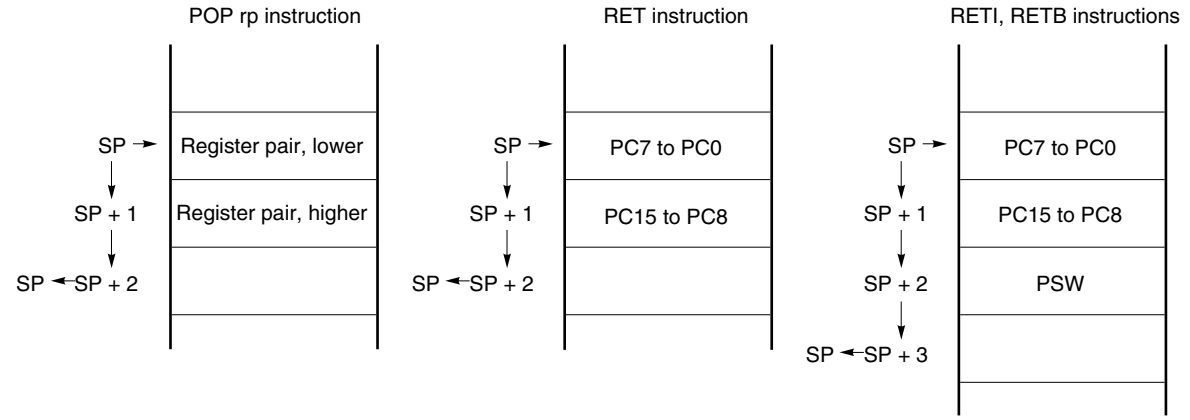

3.2.2 General-purpose registers

General-purpose registers are mapped to specific addresses of the data memory (FEE0H to FEFFH). Four banks of general-purpose registers, each consisting of eight 8-bit registers (X, A, C, B, E, D, L, and H) are available.

Each register can be used as an 8-bit register. Moreover, two 8-bit registers can be used as a register pair to make a 16-bit register (AX, BC, DE, and HL).

Each register can be described not only by a function name (X, A, C, B, E, D, L, H, AX, BC, DE, or HL) but also by an absolute name (R0 to R7, RP0 to RP3).

The register bank used for instruction execution is set by the CPU control instruction (SEL RBn). Because four register banks are provided, an efficient program can be developed by using one register bank for ordinary processing and another bank for interrupt servicing.

Figure 3-10. Format of General-Purpose Registers

(a) Absolute name

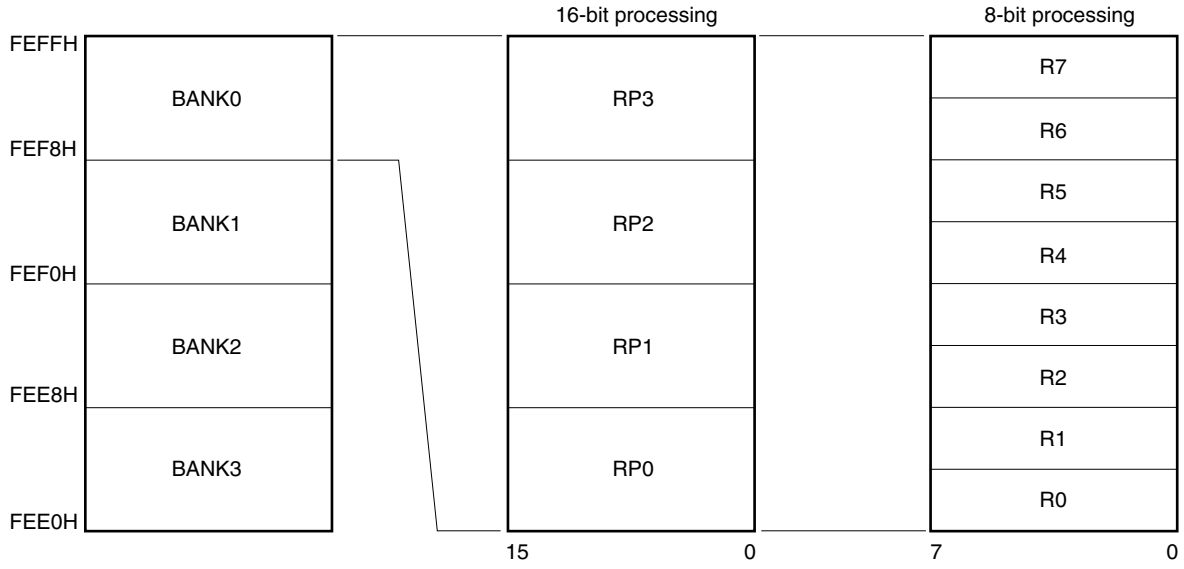

(b) Function name

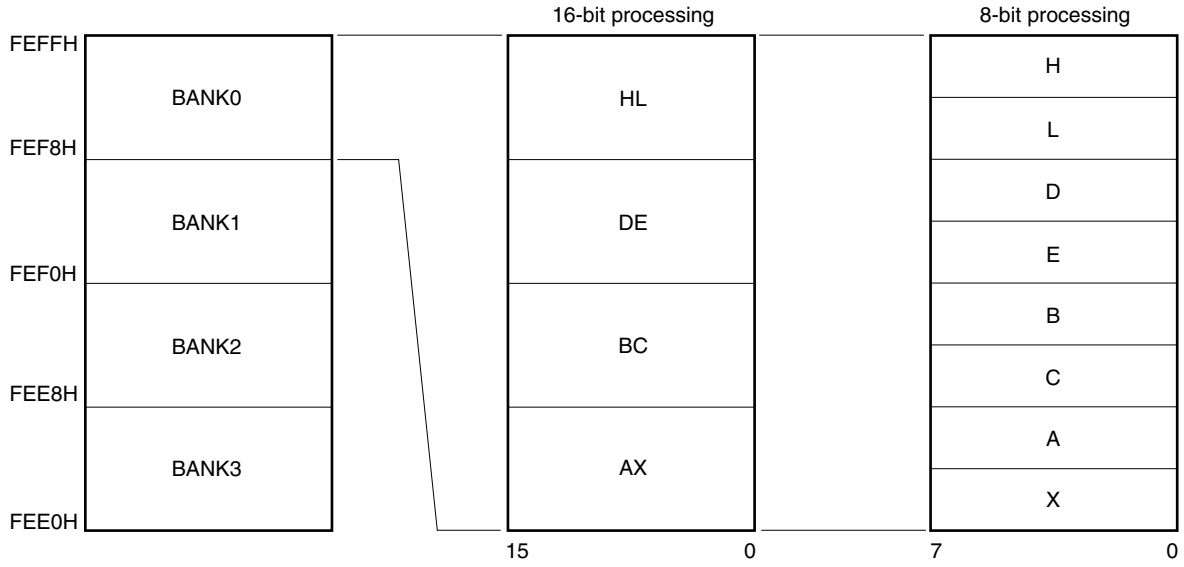

3.2.3 Special-function registers (SFRs)

Unlike the general-purpose registers, special-function registers have their own functions, and are allocated to the area of addresses FF00H to FFFFH.

The special-function registers can also be manipulated in the same manner as the general-purpose registers by using operation, transfer, and bit manipulation instructions. The bit units for manipulation (1, 8, or 16) vary depending on the special-function register type.

The bit unit for manipulation is specified as follows.

- **1-bit manipulation**
  A symbol reserved by the assembler is described as the operand (sfr.bit) of a 1-bit manipulation instruction. An address can also be specified.
- **8-bit manipulation**
  A symbol reserved by the assembler is described as the operand (sfr) of an 8-bit manipulation instruction. An address can also be specified.
- **16-bit manipulation**
  A symbol reserved by the assembler is described as the operand (sfrp) of a 16-bit manipulation instruction. When specifying an address, describe an even address.

Table 3-3 lists the special-function registers. The meanings of the symbols in this table are as follows.

- **Symbol**
  These symbols indicate the addresses of the special-function registers. They are reserved words in the RA78K0 and defined by the header file sfrbit.h in the CC78K0. These symbols can be described as the operands of instructions when the RA78K0, ID78K0-NS, or SM78K0 is used.
- **R/W**
  Indicates whether the corresponding special-function register can be read or written.
  R/W: Read/write enable
  R: Read only
  W: Write only
- **Bit Units for Manipulation**
  √ indicates the bit unit for manipulation (1, 8, or 16). – indicates the bit unit for which manipulation is not possible.
- **After Reset**
  Indicates the status of the special-function register when the $\overline{\text{RESET}}$ signal is input.

Table 3-3. List of Special-Function Registers (1/3)

Address	Special-Function Register (SFR) Name	Symbol	R/W	Bit Units for Manipulation			After Reset
				1 Bit	8 Bits	16 Bits	
FF00H	Port 0	P0	R/W	√	√	–	00H
FF02H	Port 2	P2		√	√	–	
FF03H	Port 3	P3		√	√	–	
FF04H	Port 4	P4		√	√	–	
FF05H	Port 5	P5		√	√	–	
FF06H	Port 6	P6		√	√	–	
FF07H	Port 7	P7		√	√	–	
FF08H	Port 8	P8		√	√	–	
FF09H	Port 9	P9		√	√	–	
FF0AH	16-bit timer capture/compare register 00	CR00		–	–	√	Undefined
FF0BH							
FF0CH	16-bit timer capture/compare register 01	CR01		–	–	√	
FF0DH							
FF0EH	16-bit timer counter 0	TM0	R	–	–	√	0000H
FF0FH							
FF10H	16-bit timer compare register 2	CR2	R/W	–	–	√	
FF11H							
FF12H	8-bit compare register 80	CR80		–	√	–	00H
FF13H	8-bit compare register 81	CR81		–	√	–	
FF14H	8-bit compare register 82	CR82		–	√	–	
FF15H	8-bit compare register 83	CR83		–	√	–	
FF16H	SMTD compare register A0	CRSA0		–	√	–	
FF17H	SMTD compare register B0	CRSB0		–	√	–	
FF18H	SMTD timer counter A0	TMSA0	R	–	√	–	
FF19H	MRTD compare register 0	CRM0	R/W	–	√	–	
FF1BH	Transmit shift register 2	TXS2	W	–	√	–	FFH
	Receive buffer register 2	RXB2	R	–	√	–	
FF1FH	Serial I/O shift register 3	SIO3	R/W	–	√	–	Undefined
FF20H	Port mode register 0	PM0		√	√	–	FFH
FF22H	Port mode register 2	PM2		√	√	–	
FF23H	Port mode register 3	PM3		√	√	–	
FF24H	Port mode register 4	PM4		√	√	–	
FF25H	Port mode register 5	PM5		√	√	–	
FF26H	Port mode register 6	PM6		√	√	–	
FF27H	Port mode register 7	PM7		√	√	–	
FF28H	Port mode register 8	PM8		√	√	–	
FF29H	Port mode register 9	PM9		√	√	–	

Table 3-3. List of Special-Function Registers (2/3)

Address	Special Function Register (SFR) Name	Symbol	R/W	Bit Units for Manipulation			After Reset
				1 Bit	8 Bits	16 Bits	
FF30H	Pull-up resistor option register 0	PU0	R/W	√	√	–	00H
FF32H	Pull-up resistor option register 2	PU2		√	√	–	
FF33H	Pull-up resistor option register 3	PU3		√	√	–	
FF34H	Pull-up resistor option register 4	PU4		√	√	–	
FF35H	Pull-up resistor option register 5	PU5		√	√	–	
FF36H	Pull-up resistor option register 6	PU6		√	√	–	
FF37H	Pull-up resistor option register 7	PU7		√	√	–	
FF38H	Pull-up resistor option register 8	PU8		√	√	–	
FF39H	Pull-up resistor option register 9	PU9		√	√	–	
FF40H	Clock output select register	CKS		√	√	–	
FF42H	Watchdog timer clock select register	WDCS		–	√	–	
FF48H	External interrupt rising edge enable register	EGP		√	√	–	
FF49H	External interrupt falling edge enable register	EGN		√	√	–	
FF57H	Port function control register 7	PF7		√	√	–	
FF58H	Port function control register 8	PF8		√	√	–	
FF59H	Port function control register 9	PF9		√	√	–	
FF60H	16-bit timer mode control register 0	TMC0		√	√	–	
FF61H	Prescaler mode register 0	PRM0		–	√	–	
FF62H	Capture/compare control register 0	CRC0		√	√	–	
FF63H	16-bit timer output control register 0	TOC0		√	√	–	
FF64H	16-bit timer counter 2	TM2	R	–	–	√	Undefined
FF65H							
FF66H	Timer mode control register 2	TMC2	R/W	√	√	–	00H
FF67H	Timer input control register 2	TICT2		√	√	–	
FF69H	SUB2 clock control register	CKC		√	√	–	
FF70H	8-bit timer control register 80	TMC80		√	√	–	
FF71H	8-bit timer control register 81	TMC81		√	√	–	
FF72H	8-bit timer control register 82	TMC82		√	√	–	
FF73H	8-bit timer control register 83	TMC83		√	√	–	
FF74H	SMTD clock select register A0	TCSA0		√	√	–	
FF75H	SMTD clock select register B0	TCSB0		√	√	–	
FF76H	SMTD control register 0	TSM0		√	√	–	
FF77H	SMTD sampling level setting register 0	SMS0		√	√	–	
FF78H	SMTD sampling pin status register 0	SMD0	R	√	√	–	

Table 3-3. List of Special-Function Registers (3/3)

	Address	Special Function Register (SFR) Name	Symbol		R/W	Bit Units for Manipulation			After Reset
						1 Bit	8 Bits	16 Bits	
	FF79H	MRTD control register 0	TCM0		R/W	√	√	–	00H
	FF7AH	MRTD output control register 0	TMM0		W	√	√	–	
	FF7BH	MR sampling control register 0	MRM0		R/W	√	√	–	
★	FF90H	LCD display mode register 0	LCDM0			√	√	–	
★	FF91H	LCD clock control register 0	LCDC0			–	√	–	
	FF97H	RTO data register 10	RTO10		W	–	√	–	
	FF98H	RTO data register 11	RTO11			–	√	–	
	FF99H	RTO reload interrupt compare register 1	RTC1		R/W	–	√	–	
	FF9AH	RTO operation mode register 1	RTM1			√	√	–	
	FFA0H	Asynchronous serial interface mode register 2	ASIM2			√	√	–	
	FFA1H	Asynchronous serial interface function register 2	ASIF2			√	√	–	
	FFA2H	Asynchronous serial interface status register 2	ASIS2		R	√	√	–	
	FFA3H	Compare register 2 for baud rate generation	BRCR2		R/W	–	√	–	
	FFA4H	UART pin switch register	UTCH0			√	√	–	
★	FFB0H	Serial operation mode register 3	CSIM3			√	√	–	
	FFE0H	Interrupt request flag register 0L	IF0L	IF0		√	√	√	
	FFE1H	Interrupt request flag register 0H	IF0H			√	√		
	FFE2H	Interrupt request flag register 1L	IF1L	IF1		√	√	√	
	FFE3H	Interrupt request flag register 1H	IF1H			√	√		
	FFE4H	Interrupt mask flag register 0L	MK0L	MK0		√	√	√	FFH
	FFE5H	Interrupt mask flag register 0H	MK0H			√	√		
	FFE6H	Interrupt mask flag register 1L	MK1L	MK1		√	√	√	
	FFE7H	Interrupt mask flag register 1H	MK1H			√	√		
	FFE8H	Priority specification flag register 0L	PR0L	PR0		√	√	√	
	FFE9H	Priority specification flag register 0H	PR0H			√	√		
	FFEAH	Priority specification flag register 1L	PR1L	PR1		√	√	√	
	FFEBH	Priority specification flag register 1H	PR1H			√	√		
★	FFF0H	Memory size switching register	IMS			–	√	–	CFH
	FFF4H	Internal expansion RAM size switching register	IXS			–	√	–	0CH
	FFF9H	Watchdog timer mode register	WDTM		W	√	√	–	00H
	FFFBH	Processor clock control register	PCC		R/W	√	√	–	04H

Cautions 1. As the program initial setting, be sure to set the values shown in the table below to the memory size switching register (IMS) and internal expansion RAM size switching register (IXS).

	IMS Setting Value	IXS Setting Value
μPD780957(A)	CCH	0AH
μPD780958(A)	CFH[Note]	

Note This value is the default value of IMS. Therefore, it is not necessary to set IMS again for the μPD780958(A).

2. The initial value of the processor clock control register (PCC) is 04H, but be sure to set this value to either 00H, 01H, or 02H before subsystem clock 1 operation begins (otherwise correct clock switching will not be possible).

3.3 Addressing Instruction Address

An instruction address is determined by the contents of the program counter (PC). The contents of the PC are usually automatically incremented by the number of bytes of an instruction to be fetched (by 1 per byte) every time an instruction is executed. When an instruction that causes program execution to branch is performed, the address information of the branch destination is set to the PC by means of the following addressing (for details of each instruction, refer to **78K/0 Series Instructions User's Manual (U12326E)**).

3.3.1 Relative addressing

[Function]

The 8-bit immediate data (displacement value: jdisp8) of the instruction code is added to the first address of the next instruction, the resultant sum is transferred to the program counter (PC), and the program branches. The displacement value is treated as signed 2's complement data (−128 to +127), and bit 7 serves as a sign bit. In other words, relative addressing consists of relative branching from the first address of the following instruction to the −128 to +127 range.

This addressing is used when the BR $addr16 instruction or conditional branch instruction is executed.

[Operation]

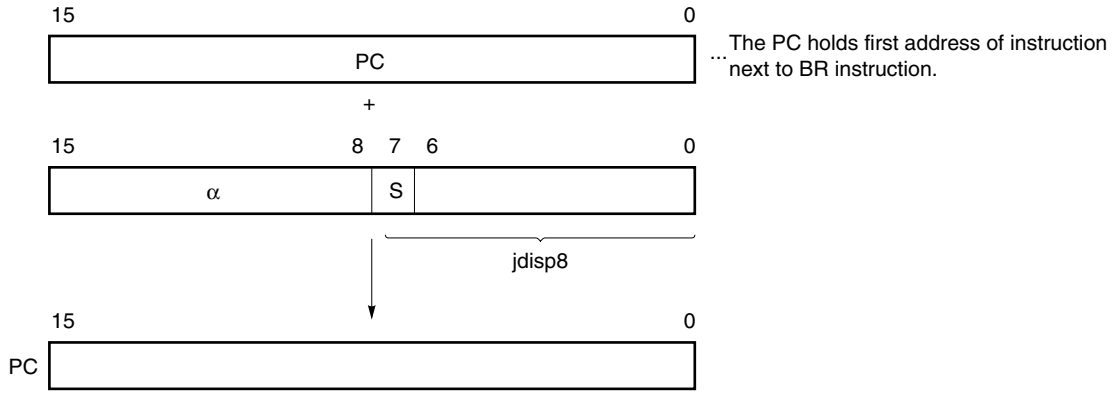

When S = 0, all bits of α are 0.
When S = 1, all bits of α are 1.

3.3.2 Immediate addressing

[Function]

The immediate data in an instruction word is transferred to the program counter (PC), and the program branches.

This addressing is used when the CALL !addr16, BR !addr16, or CALLF !addr11 instruction is executed.

The entire memory space can be used as the destination when the program is branched by executing the CALL !addr16 or BR !addr16 instruction. However, when the CALLF !addr11 instruction is executed, only the area of 0800H to 0FFFH can be used as the program branch destination.

[Operation]

When CALL !addr16 or BR !addr16 instruction is executed

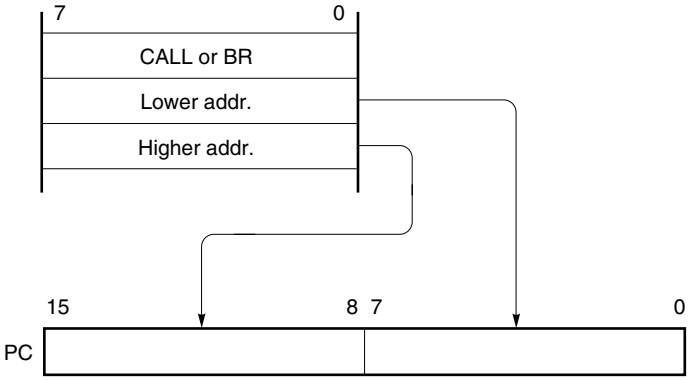

When CALLF !addr11 instruction is executed

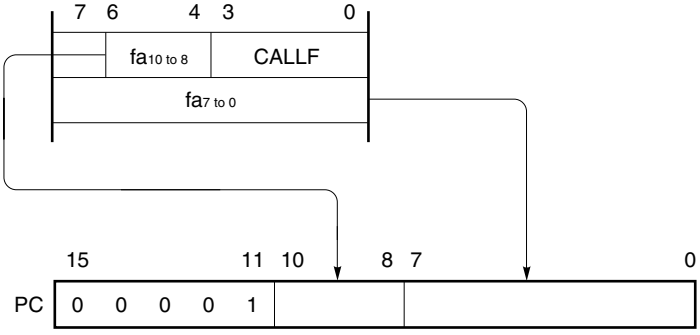

3.3.3 Table indirect addressing

[Function]

The contents of a specific location table (branch destination address) addressed by the immediate data of bits 1 to 5 of an instruction code are transferred to the program counter (PC), and the program branches.

This addressing is used when the CALLT [addr5] instruction is executed. This instruction references an address stored in the memory table from 40H to 7FH, and allows branching to the entire memory space.

[Operation]

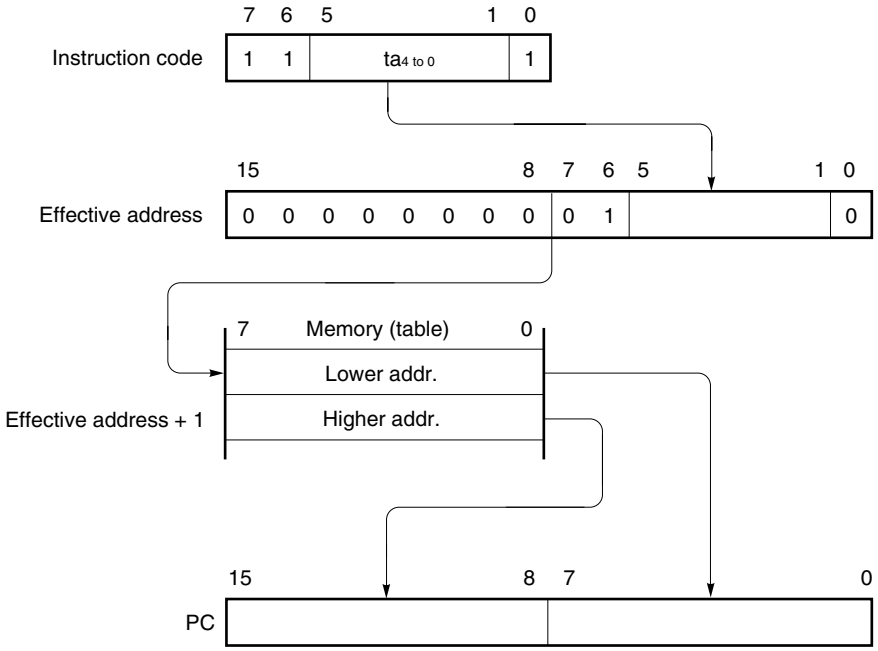

3.3.4 Register addressing

[Function]

The contents of the register pair (AX) specified by an instruction word are transferred to the program counter (PC), and the program branches.

This addressing is used when the BR AX instruction is executed.

[Operation]

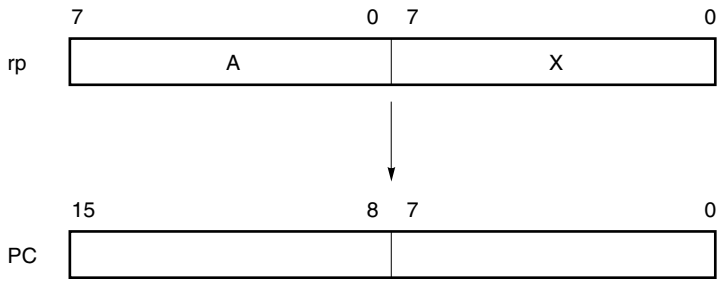

3.4 Addressing of Operand Address

The following methods are available to specify the register and memory (addressing) that undergo manipulation during instruction execution.

3.4.1 Implied addressing

[Function]

This addressing automatically (implicitly) addresses a register that functions as an accumulator (A or AX) in the general register area.

Of the instruction words of the μPD780958 Subseries, those that use implied addressing are as follows.

Instruction	Register Specified by Implied Addressing
MULU	Register A to store multiplicand and register AX to store product
DIVUW	Register AX to store dividend and quotient
ADJBA/ADJBS	Register A to store numeric value subject to decimal adjustment
ROR4/ROL4	Register A to store digit data subject to digit rotation

[Operand Format]

Since implied addressing is automatically employed with an instruction, no particular operand format is necessary.

[Description Example]

MULU X

The product of registers A and X is stored in register AX as a result of executing a multiply instruction of 8 bits × 8 bits. In this operation, registers A and AX are specified by implied addressing.

3.4.2 Register addressing

[Function]

This addressing accesses a general-purpose register as an operand. The general-purpose register to be accessed is specified by the register bank select flags (RBS0 and RBS1) or by the register specification code (Rn and RPn) in an instruction code.

Register addressing is used when an instruction that has the following operand format is executed. When an 8-bit register is specified, one of the eight registers is specified with 3 bits in the instruction code.

[Operand Format]

Operand	Operand Description
r	X, A, C, B, E, D, L, H
rp	AX, BC, DE, HL

'r' and 'rp' can be described with absolute names (R0 to R7 and RP0 to RP3), as well as function names (X, A, C, B, E, D, L, H, AX, BC, DE, HL).

[Description Example]

MOV A, C: When selecting C register for r

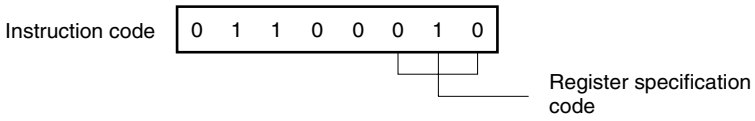

INCW DE: When selecting DE register pair for rp

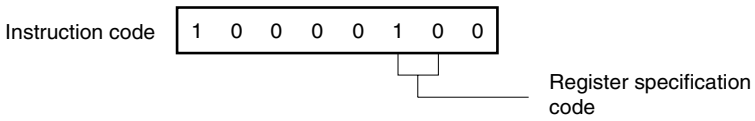

3.4.3 Direct addressing

[Function]

This addressing directly addresses the memory indicated by the immediate data in the instruction word.

[Operand Format]

Operand	Operand Description
addr16	Label or 16-bit immediate data

[Description Example]

MOV A, !0FE00H: When setting FE00H for !addr16

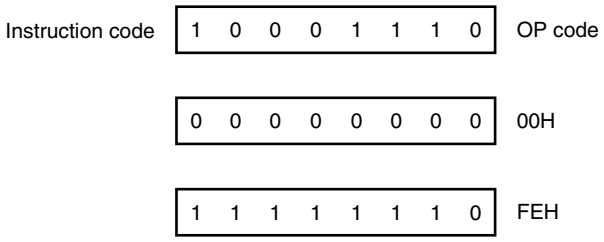

[Operation]

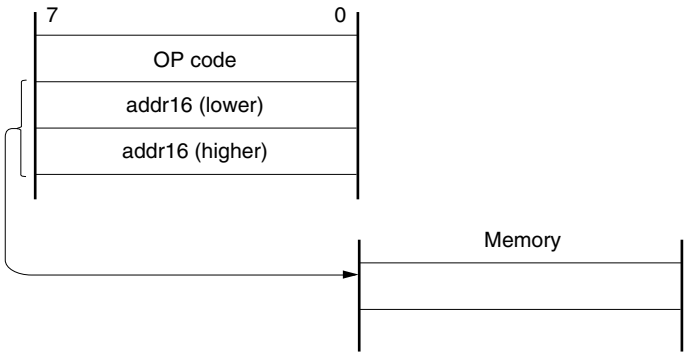

3.4.4 Short direct addressing

[Function]

This addressing directly addresses a memory area to be manipulated from a fixed space by using the 8-bit data in an instruction word.

This addressing is applicable to the fixed 256-byte space of FE20H to FF1FH. The internal high-speed RAM is mapped to addresses FE20H to FEFFH, and special-function registers (SFRs) are mapped to addresses FF00H to FF1FH.

The SFR area (FF00H to FF1FH) to which short direct addressing is applied is a part of the entire SFR area. Ports and compare and capture registers of timer/event counters, which are frequently accessed on the program, are mapped to the SFR area. These SFRs can be manipulated with few bytes and clocks.

Bit 8 of the effective address is 0 if the 8-bit immediate data is in the range of 20H to FFH, and is 1 if the data is in the range of 00H to 1FH. Refer to **[Operation]** below.

[Operand Format]

Operand	Operand Description
saddr	Label or immediate data of FE20H to FF1FH
saddrp	Label or immediate data of FE20H to FF1FH (even address only)

[Description Example]

MOV 0FE30H, #50H: When setting FE30H for saddr and 50H for immediate data

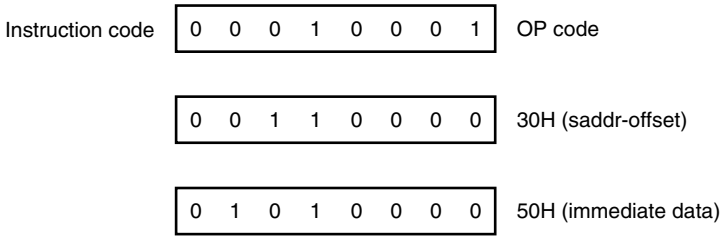

[Operation]

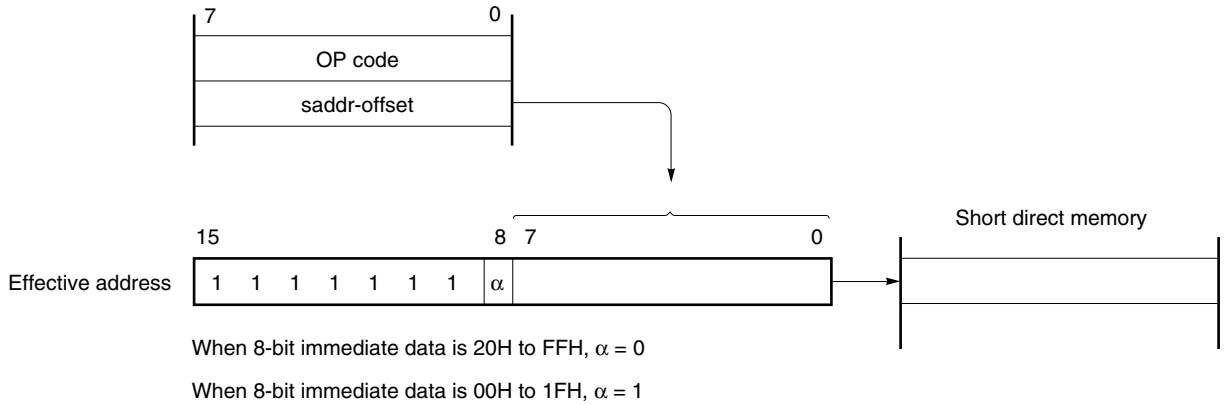

When 8-bit immediate data is 20H to FFH, $\alpha = 0$

When 8-bit immediate data is 00H to 1FH, $\alpha = 1$

3.4.5 Special-function register (SFR) addressing

[Function]

This addressing addresses special-function registers (SFRs) mapped to the memory by using an 8-bit immediate data in an instruction word.

This addressing is applied to the 240-byte space of FF00H to FFCFH and FFE0H to FFFFH. However, the SFRs mapped to the area of FF00H to FF1FH can also be accessed by means of short direct addressing.

[Operand Format]

Operand	Operand Description
sfr	Special-function register name
sfrp	Name of special-function register that can be manipulated in 16-bit units (even address only).

[Description Example]

MOV PM0, A: When selecting PM0 (FF20H) for sfr

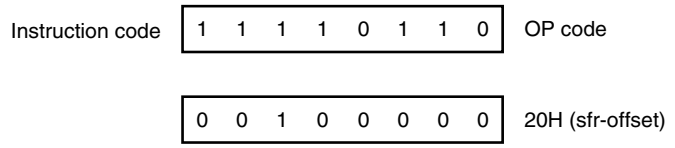

[Operation]

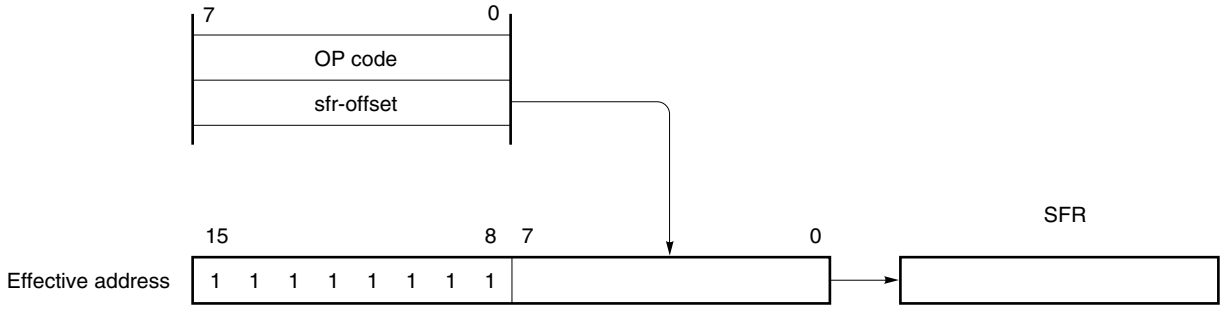

3.4.6 Register indirect addressing

[Function]

This addressing addresses memory by using the contents of a specified register pair, which is specified as an operand. The register pair to be accessed is specified by the register bank select flags (RBS0 and RBS1) and the register pair specification code in an instruction code. This addressing can address the entire memory space.

[Operand Format]

Operand	Operand Description
–	[DE], [HL]

[Description Format]

MOV A, [DE]: When selecting [DE] for register pair

Instruction code	1	0	0	0	0	1	0	1

[Operation]

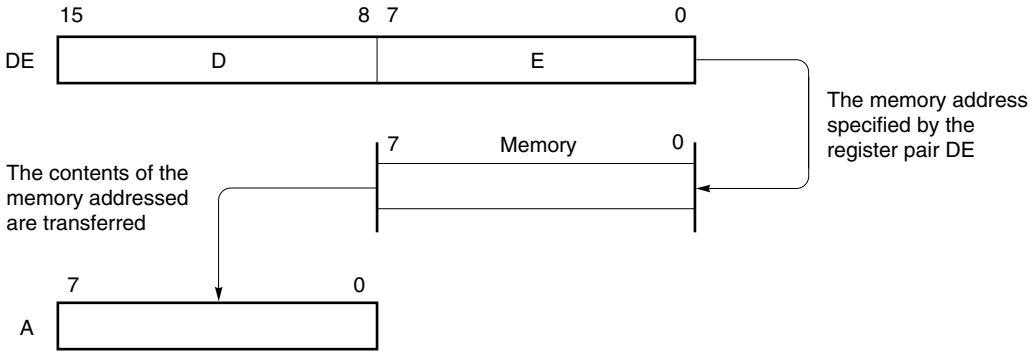

3.4.7 Based addressing

[Function]

This addressing addresses memory by using the result of adding 8-bit immediate data to the contents of the HL register pair, which is used as a base register. The HL register pair to be accessed is in the register bank specified by the register bank select flags (RBS0 and RBS1). The addition is executed by extending the offset data to 16 bits as a positive number. A carry from the 16th bit is ignored. This addressing can address the entire memory space.

[Operand Format]

Operand	Operand Description
–	[HL + byte]

[Description Example]

MOV A, [HL + 10H]: When setting 10H for byte

Instruction code	1	0	1	0	1	1	1	0
	0	0	0	1	0	0	0	0

3.4.8 Based indexed addressing

[Function]

This addressing addresses memory by using the result of adding the contents of the B or C register specified in the instruction word to the contents of the HL register, which is used as a base register. The HL, B, and C registers accessed are in the register bank specified by the register bank select flags (RBS0 and RBS1). The addition is executed with the contents of the B or C register extended to 16 bits as a positive number. A carry from the 16th bit is ignored. This addressing can address the entire memory space.

[Operand Format]

Operand	Operand Description
–	[HL + B], [HL + C]

[Description Example]

MOV A, [HL + B]

Instruction code	1	0	1	0	1	0	1	1

3.4.9 Stack addressing

[Function]

This addressing indirectly addresses the stack area by using the contents of the stack pointer (SP).

This addressing is automatically used to save/restore register contents when the PUSH, POP, subroutine call, or return instruction is executed, or when an interrupt request is generated.

Stack addressing can access the internal high-speed RAM area only.

[Description Example]

PUSH DE

Instruction code	1	0	1	1	0	1	0	1

CHAPTER 4 PORT FUNCTIONS

4.1 Port Functions

The μPD780958 Subseries incorporates sixty-nine I/O port pins. Each port can be manipulated in 1-bit or 8-bit units, enabling considerably varied control. Figure 4-1 shows the port configuration.

Besides port functions, the port pins can also serve as on-chip hardware I/O pins.

For ports 0 and 2 to 9[Note], on-chip pull-up resistor connection can be specified by software, regardless of input or output mode.

Table 4-1 shows each port function.

Note Even though an on-chip pull-up resistor is not provided for pins P60 to P62, it is possible to specify on-chip pull-up resistor connection in 1-bit units for these pins using a mask option.

Figure 4-1. Port Configuration

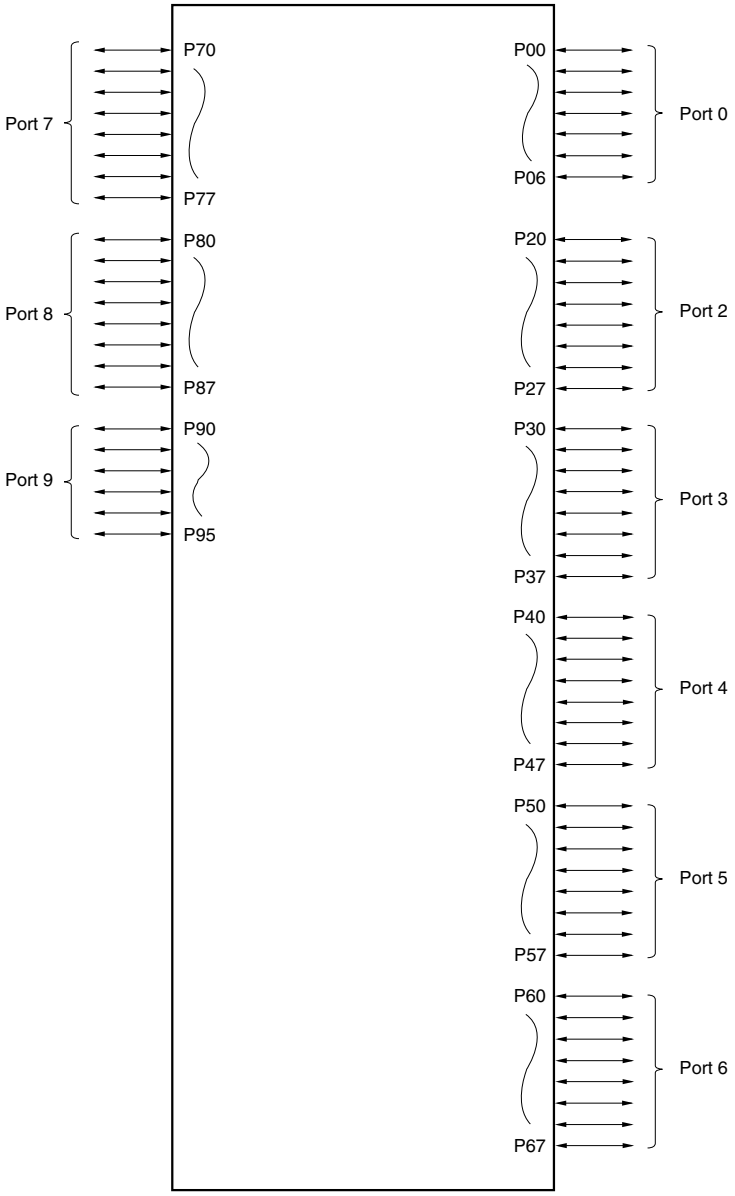

Table 4-1. Port Functions (1/2)

Pin Name	I/O	Function		After Reset	Alternate Function
P00 to P04	I/O	Port 0. 7-bit input/output port. Input/output can be specified in 1-bit units. On-chip pull-up resistors can be used by software settings.		Input	INTP0 to INTP4
P05					INTP5/SMP0/RxD20
P06					INTP6/RxD21
P20	I/O	Port 2. 8-bit input/output port. Input/output can be specified in 1-bit units. On-chip pull-up resistors can be used by software settings.		Input	TxD20
P21					TxD21
P22 to P25					SMP1 to SMP4
P26					MRI0
P27					MRI1
P30	I/O	Port 3. 8-bit input/output port. Input/output can be specified in 1-bit units. On-chip pull-up resistors can be used by software settings.		Input	TI01
P31					TI00/TO0
P32					TI2
P33					SMO0
P34					PCL
P35					SI3
P36					SO3
P37					$\overline{\text{SCK3}}$
P40 to P47	I/O	Port 4. 8-bit input/output port. Input/output can be specified in 1-bit units. On-chip pull-up resistors can be used by software settings.		Input	–
★ P50	I/O	Port 5.	Sub-HALT test program pin[Note].	Input	–
P51 to P55		8-bit input/output port. Input/output can be specified in 1-bit units. On-chip pull-up resistors can be used by software settings.			
P56					MRO0
P57					MRO1
P60 to P62	I/O	Port 6. 8-bit input/output port. Input/output can be specified in 1-bit units.	N-ch open-drain I/O port (3.6 V breakdown). On-chip pull-up resistor connection can be specified by means of mask option.	Input	–
P63			On-chip pull-up resistors can be used by software settings.		ENA
P64 to P67					RTO0 to RTO3

Note Refer to **CHAPTER 22 SUB-HALT TEST PROGRAM**.

Table 4-1. Port Functions (2/2)

Pin Name	I/O	Function	After Reset	Alternate Function
P70 to P77	I/O	Port 7. 8-bit input/output port. Input/output can be specified in 1-bit units. On-chip pull-up resistors can be used by software settings.	Input	S8 to S15
P80 to P87	I/O	Port 8. 8-bit input/output port. Input/output can be specified in 1-bit units. On-chip pull-up resistors can be used by software settings.	Input	S16 to S23
P90 to P95	I/O	Port 9. 6-bit input/output port. Input/output can be specified in 1-bit units. On-chip pull-up resistors can be used by software settings.	Input	S24 to S29

4.2 Port Configuration

A port consists of the following hardware.

Table 4-2. Port Configuration

Item	Configuration
Control registers	Port mode register (PM0, PM2 to PM9) Pull-up resistor option register (PU0, PU2 to PU9) Port function control register (PF7 to PF9)
Ports	Total: 69
Pull-up resistors	Total: 69 (software control: 66, mask option control: 3)

4.2.1 Port 0

This is a 7-bit I/O port with an output latch. Input/output can be specified for P00 to P06 in 1-bit units by setting port mode register 0 (PM0). On-chip pull-up resistor connection can be specified in 1-bit units using pull-up resistor option register 0 (PU0).

This port also functions as the external interrupt request inputs (INTP0 to INTP6), serial interface (UART2) data inputs (RxD20 and RxD21), and sampling clock input (SMP0).

$\overline{\text{RESET}}$ input sets this port to input mode.

Figure 4-2 shows the block diagram of port 0.

Cautions 1. Since port 0 also functions as the external interrupt request inputs, an interrupt request flag is set when a port pin is specified in output mode and its output level is changed. Therefore, be sure to set the interrupt mask flag to 1 when using a port 0 pin in the output mode.

2. When using a port 0 pin in the output mode, be sure to set the corresponding bit of pull-up resistor option register 0 (PU0) to 0.

★ **Figure 4-2. Block Diagram of P00 to P06**

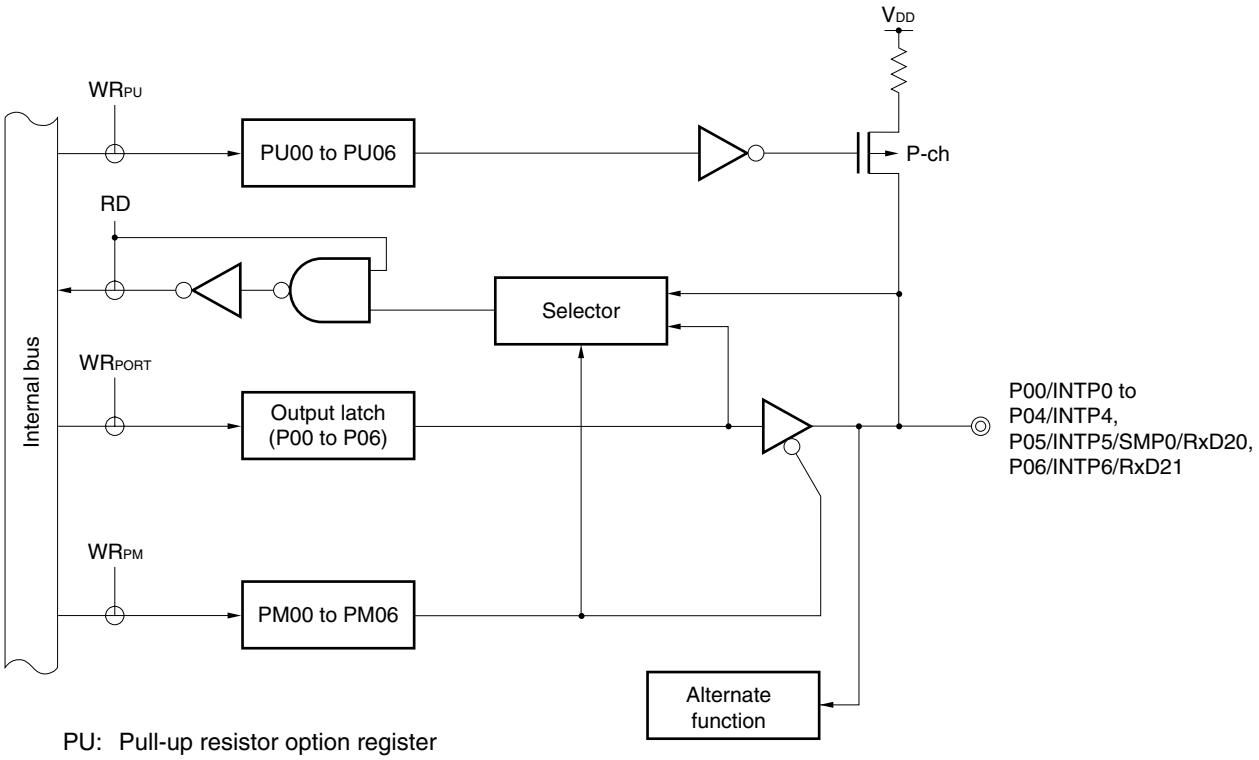

PU: Pull-up resistor option register
PM: Port mode register
RD: Port 0 read signal
WR: Port 0 write signal

4.2.2 Port 2

This is an 8-bit I/O port with an output latch. Input/output can be specified for P20 to P27 in 1-bit units by setting port mode register 2 (PM2). On-chip pull-up resistor connection can be specified in 1-bit units using pull-up resistor option register 2 (PU2).

This port also functions as the serial interface (UART2) data outputs (TxD20 and TxD21), sampling clock inputs (SMP1 to SMP4), and MR sampling inputs (MRI0 and MRI1).

$\overline{\text{RESET}}$ input sets this port to input mode.

Figures 4-3 and 4-4 show the block diagrams of port 2.

Cautions 1. When a transmit operation is performed via the serial interface, set the pins to be used to the output mode and set the output latch to 0. When this port functions as the sampling clock input or MR sampling data input, set the pin to be used to the input mode.

2. When using a port 2 pin in the output mode, be sure to set the corresponding bit of pull-up resistor option register 2 (PU2) to 0.

Figure 4-3. Block Diagram of P20 and P21

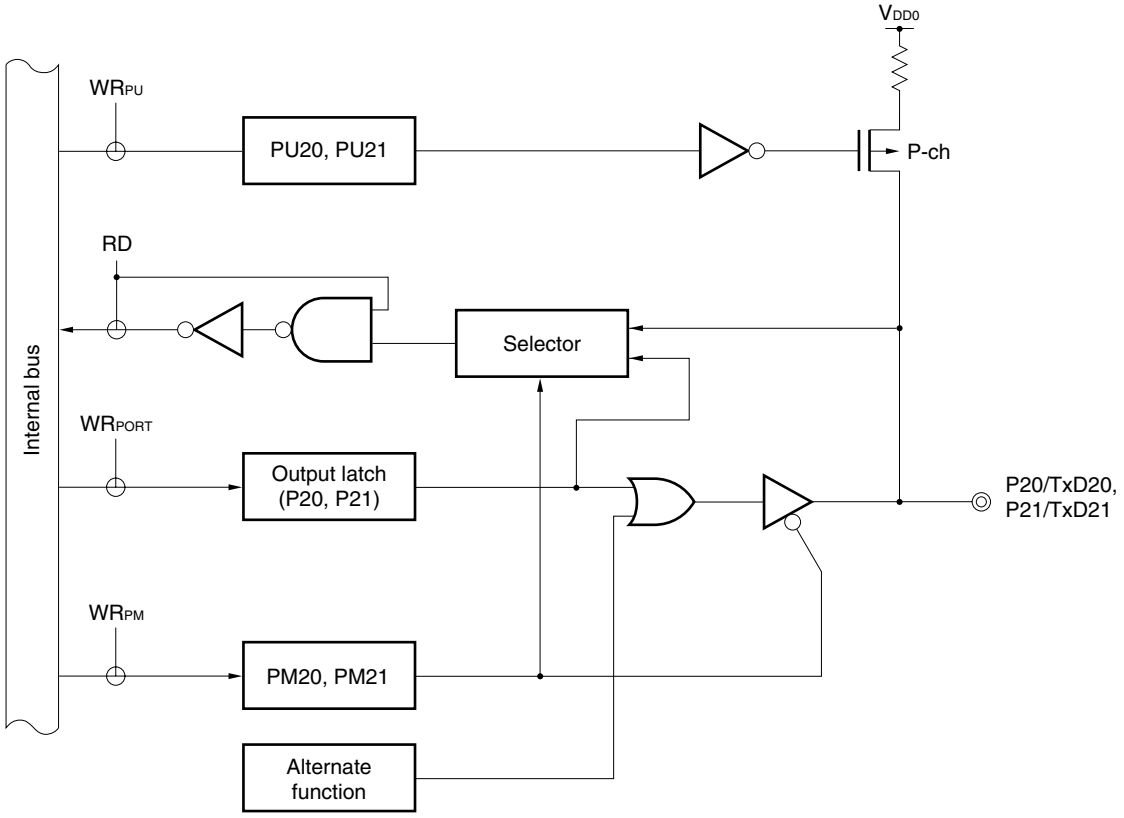

PU: Pull-up resistor option register

PM: Port mode register

RD: Port 2 read signal

WR: Port 2 write signal

★ **Figure 4-4. Block Diagram of P22 to P27**

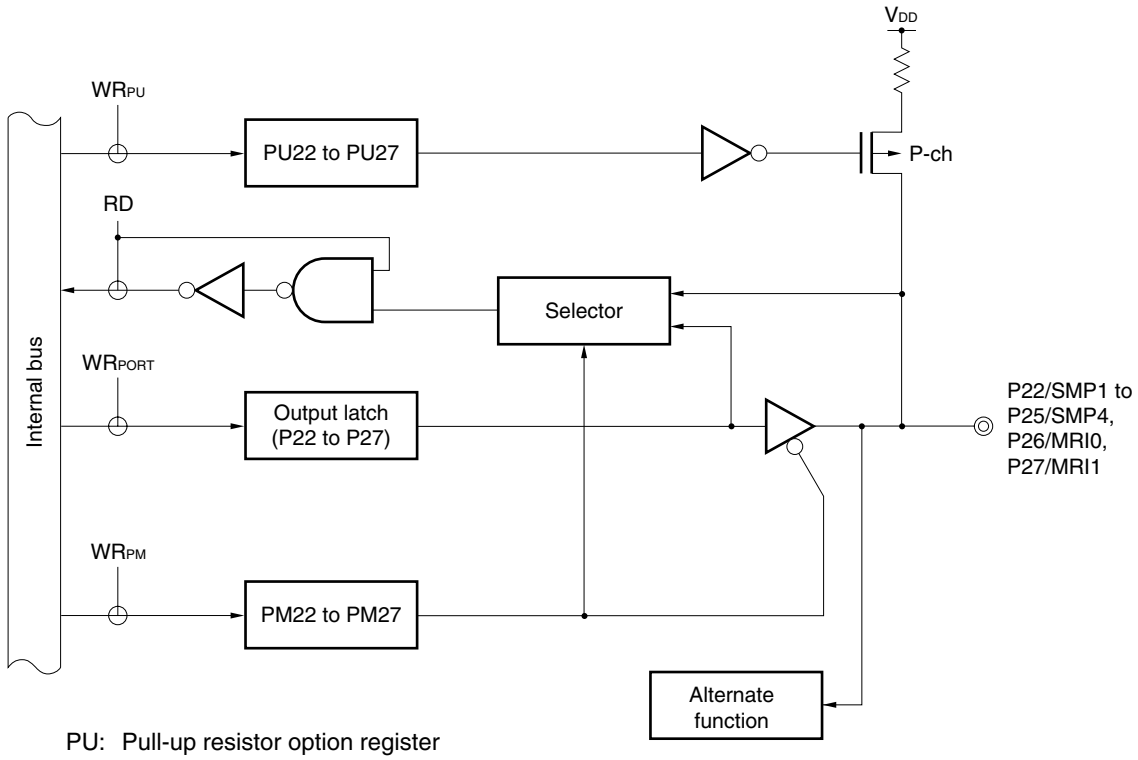

PU: Pull-up resistor option register
PM: Port mode register
RD: Port 2 read signal
WR: Port 2 write signal

4.2.3 Port 3

This is an 8-bit I/O port with an output latch. Input/output can be specified for P30 to P37 in 1-bit units by setting port mode register 3 (PM3). On-chip pull-up resistor connection can be specified in 1-bit units using pull-up resistor option register 3 (PU3).

This port also functions as the capture trigger signal inputs (TI00 and TI01), timer output (TO0), external event count clock input (TI2), sampling clock output (SMO0), PCL output (PCL), serial interface serial data I/O (SI3 and SO3), and serial interface serial clock I/O ($\overline{SCK3}$).

$\overline{RESET}$ input sets this port to input mode.

Figures 4-5 to 4-7 show the block diagrams of port 3.

Cautions 1. When a transmit operation is performed by serial interface, or when this port functions as the timer output, sampling clock output, or PCL output, set the pins to be used to the output mode and set the output latch to 0. On the other hand, when a receive operation is performed by serial interface, or when this port functions as the capture trigger input, external event count clock input, or MR sampling input, set the pins to be used to the input mode.

2. When using a port 3 pin in the output mode, be sure to set the corresponding bit of pull-up resistor option register 3 (PU3) to 0.

★ **Figure 4-5. Block Diagram of P30, P32, and P35**

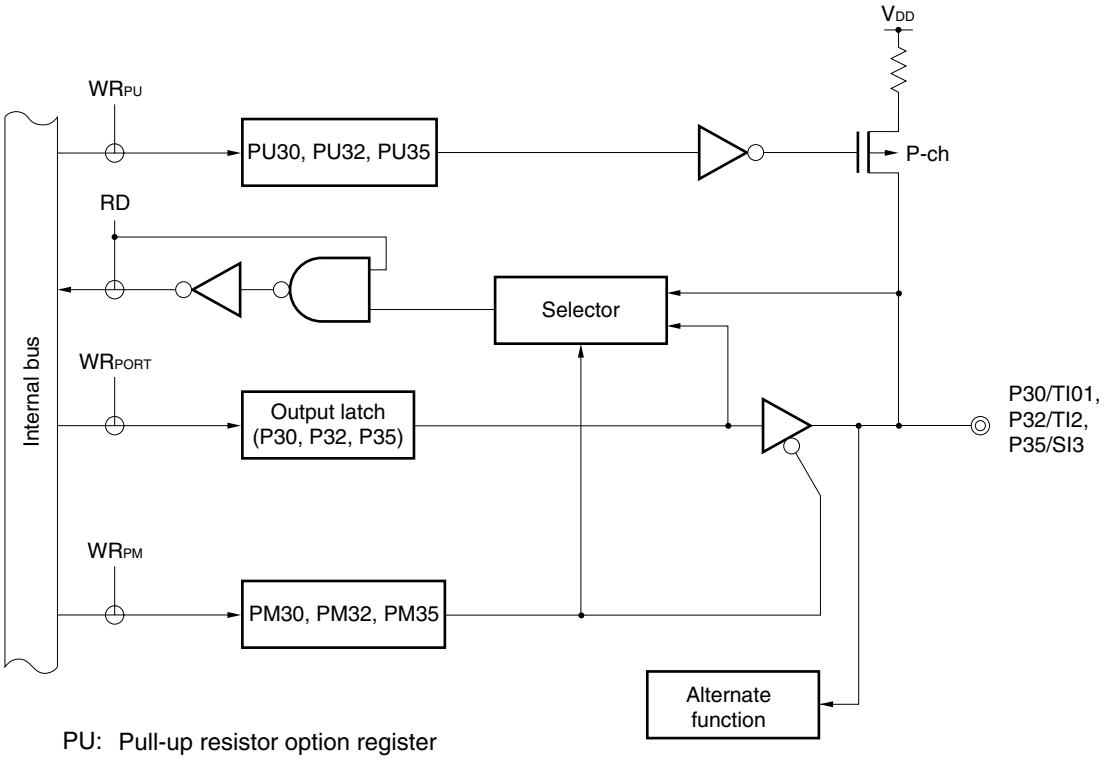

PU: Pull-up resistor option register
PM: Port mode register
RD: Port 3 read signal
WR: Port 3 write signal

★ **Figure 4-6. Block Diagram of P31 and P37**

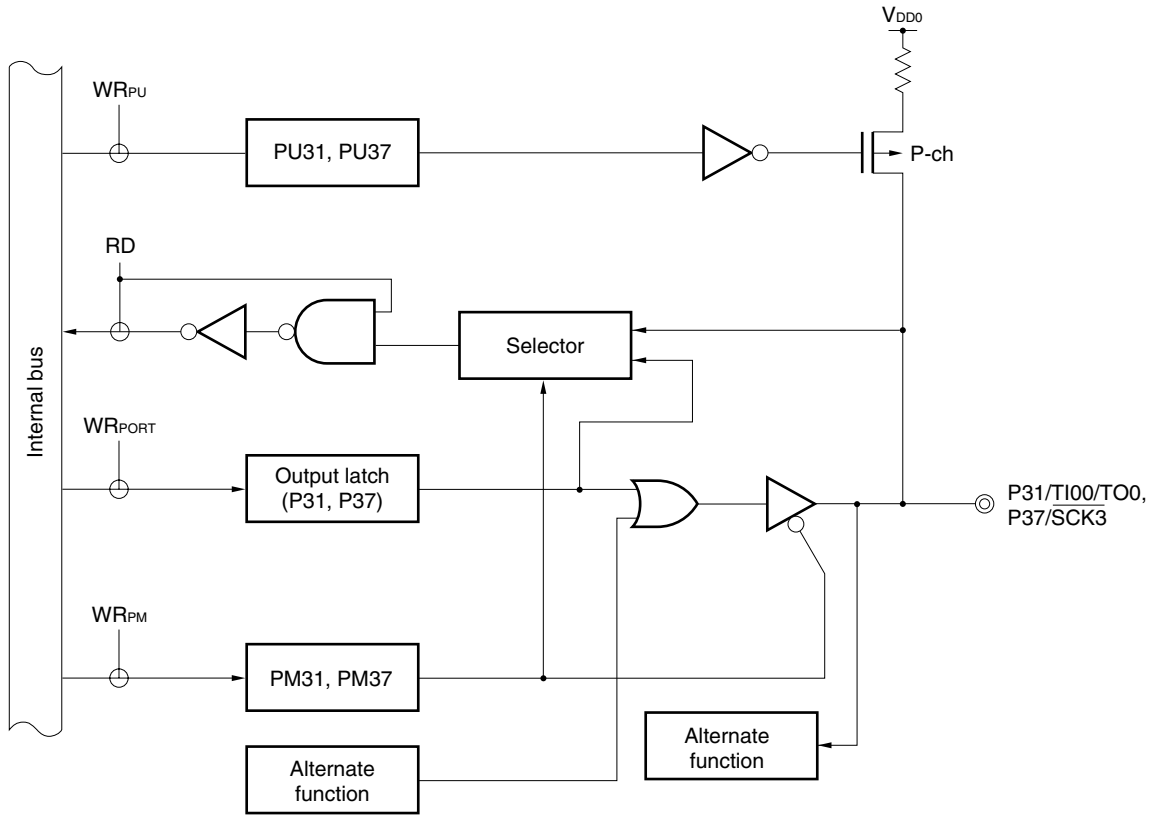

PU: Pull-up resistor option register

PM: Port mode register

RD: Port 3 read signal

WR: Port 3 write signal

Figure 4-7. Block Diagram of P33, P34, and P36

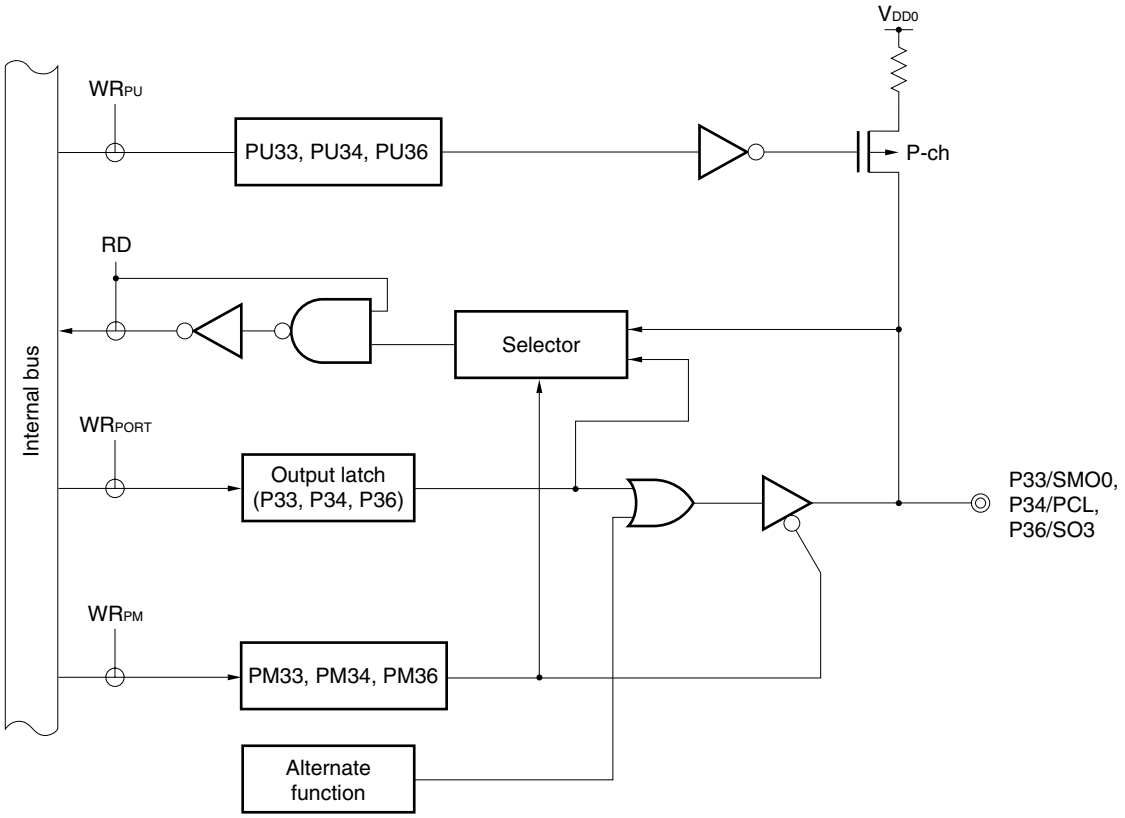

PU: Pull-up resistor option register
PM: Port mode register
RD: Port 3 read signal
WR: Port 3 write signal

4.2.4 Port 4

This is an 8-bit I/O port with an output latch. Input/output can be specified for P40 to P47 in 1-bit units by setting port mode register 4 (PM4). On-chip pull-up resistor connection can be specified in 1-bit units using pull-up resistor option register 4 (PU4).

$\overline{\text{RESET}}$ input sets this port to input mode.

Figure 4-8 shows the block diagram of port 4.

Caution When using a port 4 pin in the output mode, be sure to set the corresponding bit of pull-up resistor option register 4 (PU4) to 0.

Figure 4-8. Block Diagram of P40 to P47

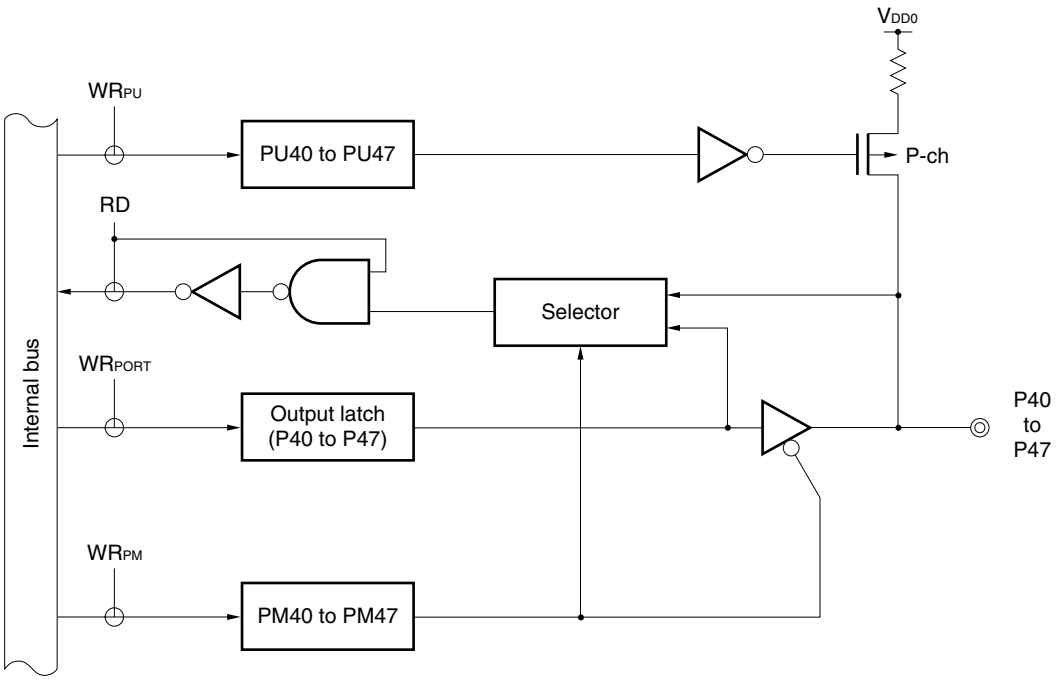

PU: Pull-up resistor option register
PM: Port mode register
RD: Port 4 read signal
WR: Port 4 write signal

4.2.5 Port 5

This is an 8-bit I/O port with an output latch. Input/output can be specified for P50 to P57 in 1-bit units by setting port mode register 5 (PM5). On-chip pull-up resistor connection can be specified in 1-bit units using pull-up resistor option register 5 (PU5).

This port also functions as the MR sampling outputs (MRO0 and MRO1).

$\overline{\text{RESET}}$ input sets this port to input mode.

Figures 4-9 and 4-10 show the block diagrams of port 5.

Cautions 1. When this port functions as the MR sampling data output, set the pin to be used to the output mode and set the output latch to 0.

2. When using a port 5 pin in the output mode, be sure to set the corresponding bit of pull-up resistor option register 5 (PU5) to 0.

★ **Figure 4-9. Block Diagram of P50 to P55**

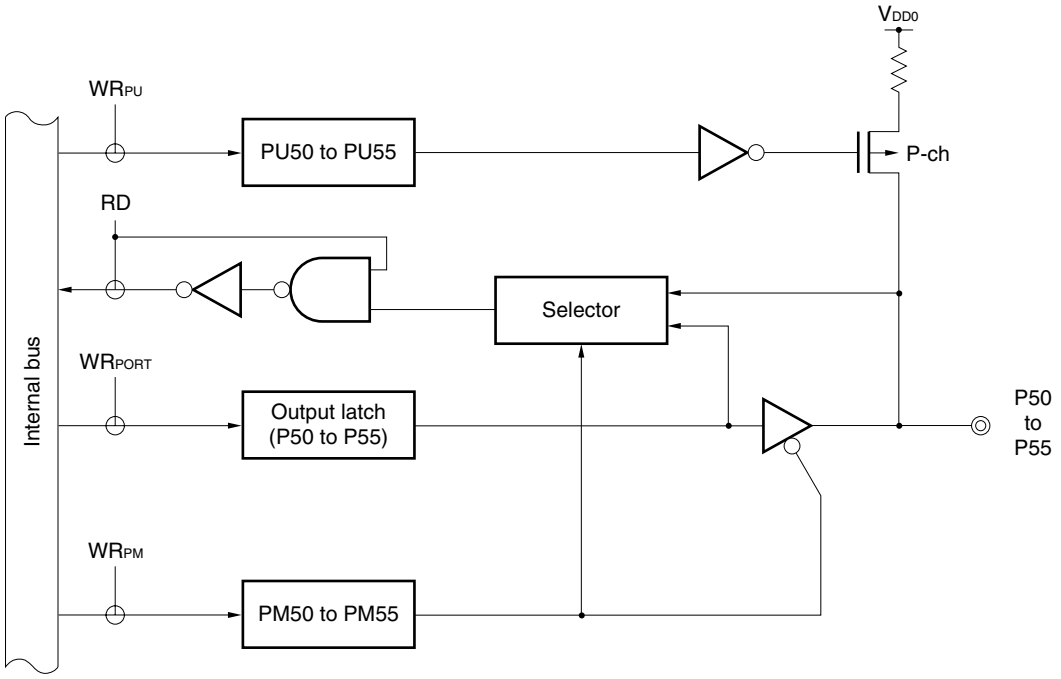

PU: Pull-up resistor option register

PM: Port mode register

RD: Port 5 read signal

WR: Port 5 write signal

Figure 4-10. Block Diagram of P56 and P57

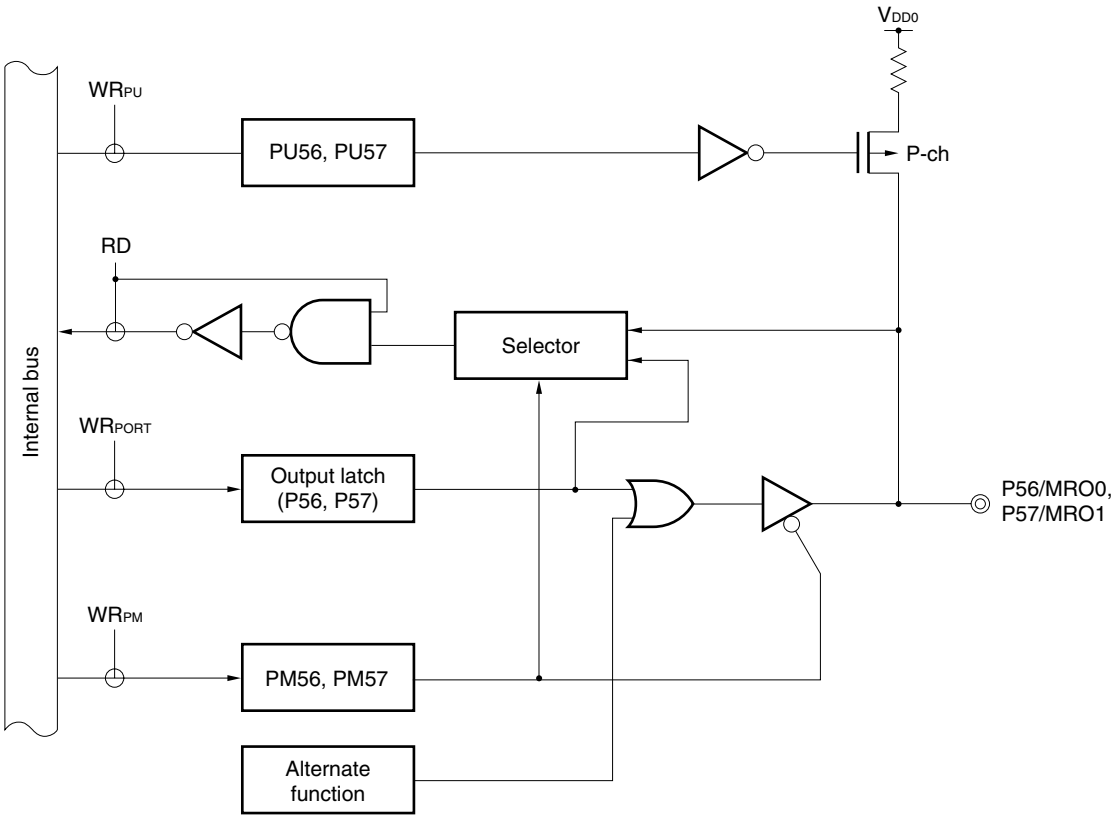

PU: Pull-up resistor option register
PM: Port mode register
RD: Port 5 read signal
WR: Port 5 write signal

4.2.6 Port 6

This is an 8-bit I/O port with an output latch. Input/output can be specified for P60 to P67 in 1-bit units by setting port mode register 6 (PM6).

An on-chip pull-up resistor can be connected to each pin of this port, but the connection method differs depending on the bit, as shown in the following table.

Table 4-3. Pull-up Resistor Connection of Port 6

Higher 5 Bits	Lower 3 Bits
On-chip pull-up resistors can be connected in 1-bit units using PU6.	On-chip pull-up resistors can be connected in 1-bit units using a mask option.

PU6: Pull-up resistor option register 6

Pins P60 to P62 are an N-ch open-drain I/O port (3.6 V breakdown).

This port also functions as the real-time output enable signal output (ENA) and real-time outputs (RTO0 to RTO3).

$\overline{\text{RESET}}$ input sets this port to input mode.

Figures 4-11 and 4-12 show the block diagrams of port 6.

Cautions 1. When this port functions as the real-time output enable signal output or real-time output, set the pin to be used to the output mode and set the output latch to 0.

2. When using a port 6 pin in the output mode, be sure to set the corresponding bit of pull-up resistor option register 6 (PU6) to 0.

Figure 4-11. Block Diagram of P60 to P62

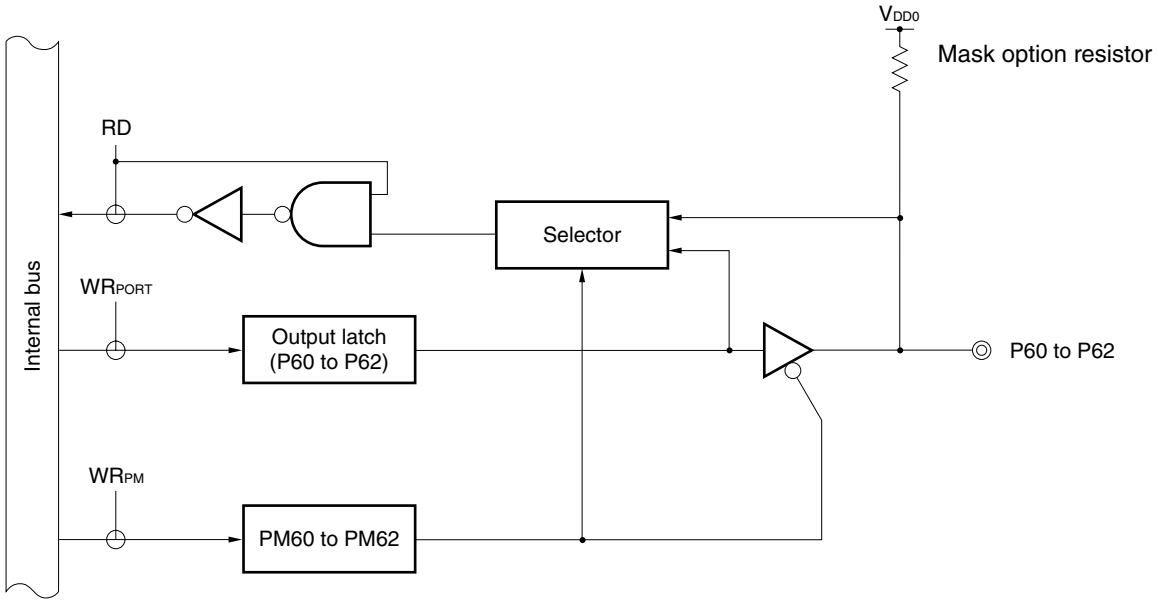

PM: Port mode register

RD: Port 6 read signal

WR: Port 6 write signal

Figure 4-12. Block Diagram of P63 to P67

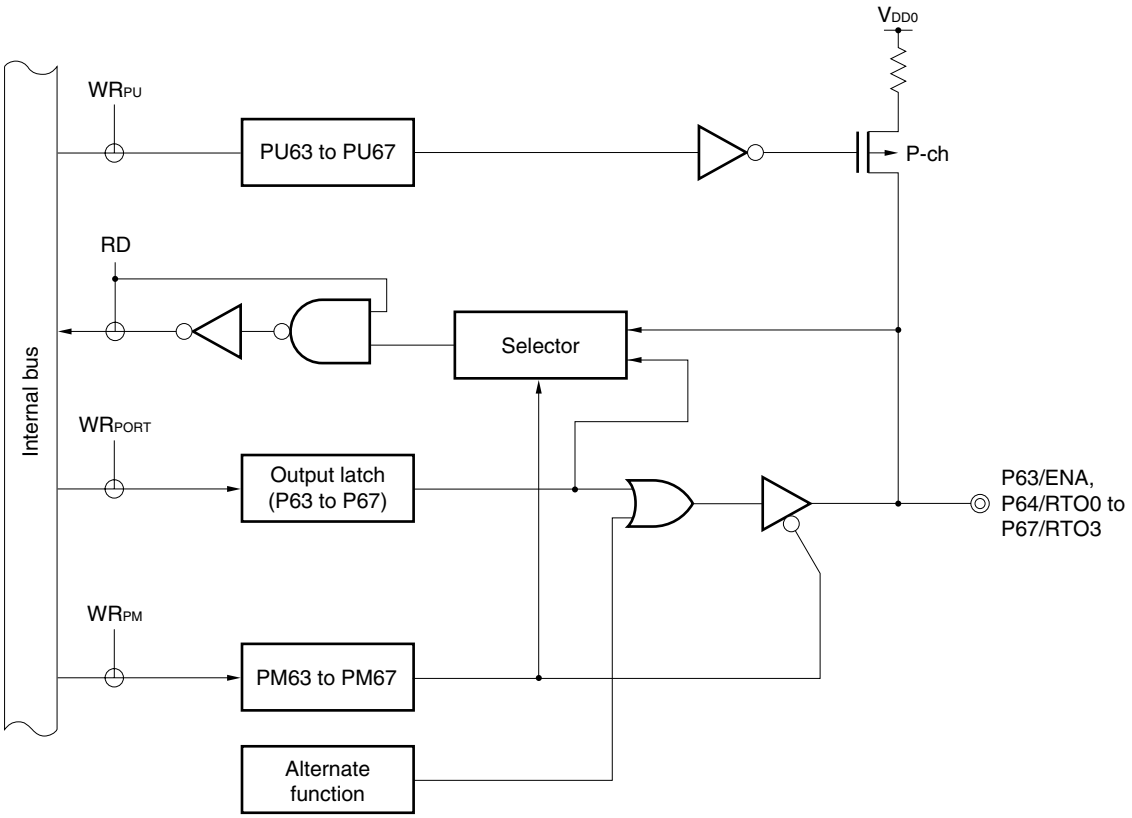

PU: Pull-up resistor option register
PM: Port mode register
RD: Port 6 read signal
WR: Port 6 write signal

4.2.7 Port 7

This is an 8-bit I/O port with an output latch. Input/output can be specified for P70 to P77 in 1-bit units by setting port mode register 7 (PM7). On-chip pull-up resistor connection can be specified in 1-bit units using pull-up resistor option register 7 (PU7).

Port 7 also functions as the segment pins (S8 to S15). Whether this port functions as an I/O port or segment pins can be selected using port function control register 7 (PF7).

$\overline{\text{RESET}}$ input sets this port to input mode.

Figure 4-13 shows the block diagram of port 7.

Cautions 1. When this port functions as the LCD controller's segment signal outputs, set PF7 to 1. When the segment output function is selected by setting PF7 to 1, the values of PM7 and port latch become invalid. At this time, be sure to set PU7 to 0.

2. When using a port 7 pin in the output mode, be sure to set the corresponding bit of pull-up resistor option register 7 (PU7) to 0.

Figure 4-13. Block Diagram of P70 to P77

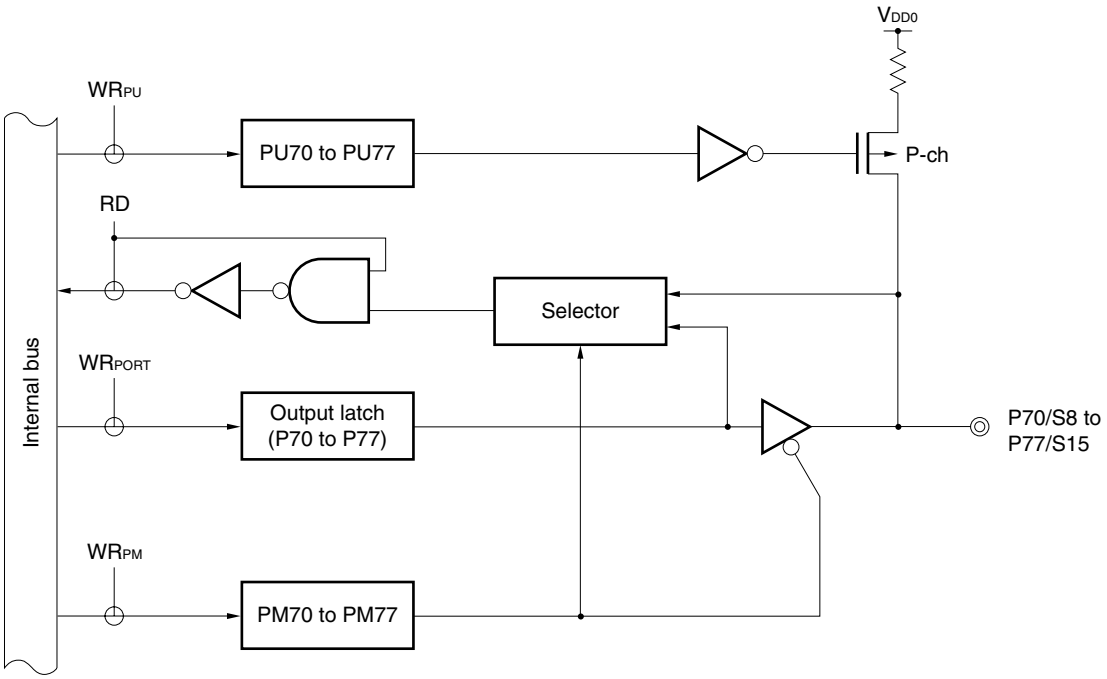

PU: Pull-up resistor option register
PM: Port mode register
RD: Port 7 read signal
WR: Port 7 write signal

Caution For the control of the LCD controller's segment signal output block, refer to CHAPTER 16 LCD CONTROLLER/DRIVER.

4.2.8 Port 8

This is an 8-bit I/O port with an output latch. Input/output can be specified for P80 to P87 in 1-bit units by setting port mode register 8 (PM8). On-chip pull-up resistor connection can be specified in 1-bit units using pull-up resistor option register 8 (PU8).

Port 8 also functions as the segment pins (S16 to S23). Whether this port functions as an I/O port or segment pins can be selected using port function control register 8 (PF8).

$\overline{\text{RESET}}$ input sets this port to input mode.

Figure 4-14 shows the block diagram of port 8.

Cautions 1. When this port functions as the LCD controller's segment signal outputs, set PF8 to 1. When the segment output function is selected by setting PF8 to 1, the values of PM8 and port latch become invalid. At this time, be sure to set PU8 to 0.

2. When using a port 8 pin in the output mode, be sure to set the corresponding bit of pull-up resistor option register 8 (PU8) to 0.

Figure 4-14. Block Diagram of P80 to P87

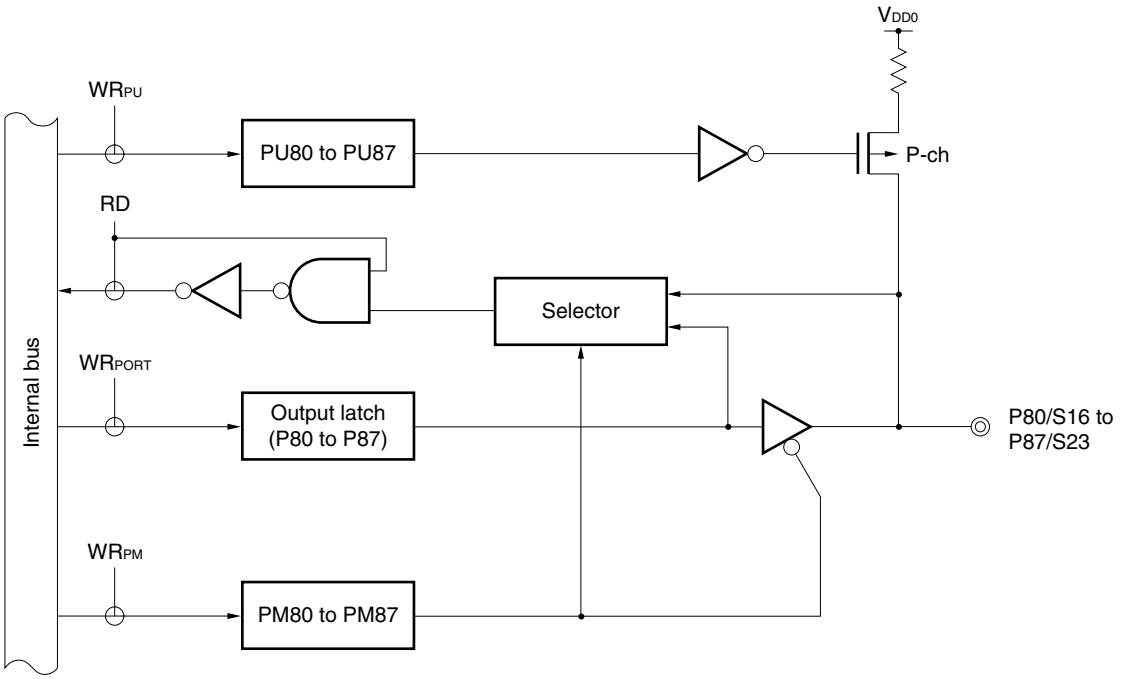

PU: Pull-up resistor option register
PM: Port mode register
RD: Port 8 read signal
WR: Port 8 write signal

Caution For the control of the LCD controller's segment signal output block, refer to CHAPTER 16 LCD CONTROLLER/DRIVER.

4.2.9 Port 9

This is a 6-bit I/O port with an output latch. Input/output can be specified for P90 to P95 in 1-bit units by setting port mode register 9 (PM9). On-chip pull-up resistor connection can be specified in 1-bit units using pull-up resistor option register 9 (PU9).

Port 9 also functions as the segment pins (S24 to S29). Whether this port functions as an I/O port or segment pins can be selected using port function control register 9 (PF9).

$\overline{\text{RESET}}$ input sets this port to input mode.

Figure 4-15 shows the block diagram of port 9.

Cautions 1. When this port functions as the LCD controller's segment signal outputs, set PF9 to 1. When the segment output function is selected by setting PF9 to 1, the values of PM9 and port latch become invalid. At this time, be sure to set PU9 to 0.

2. When using a port 9 pin in the output mode, be sure to set the corresponding bit of pull-up resistor option register 9 (PU9) to 0.

Figure 4-15. Block Diagram of P90 to P95

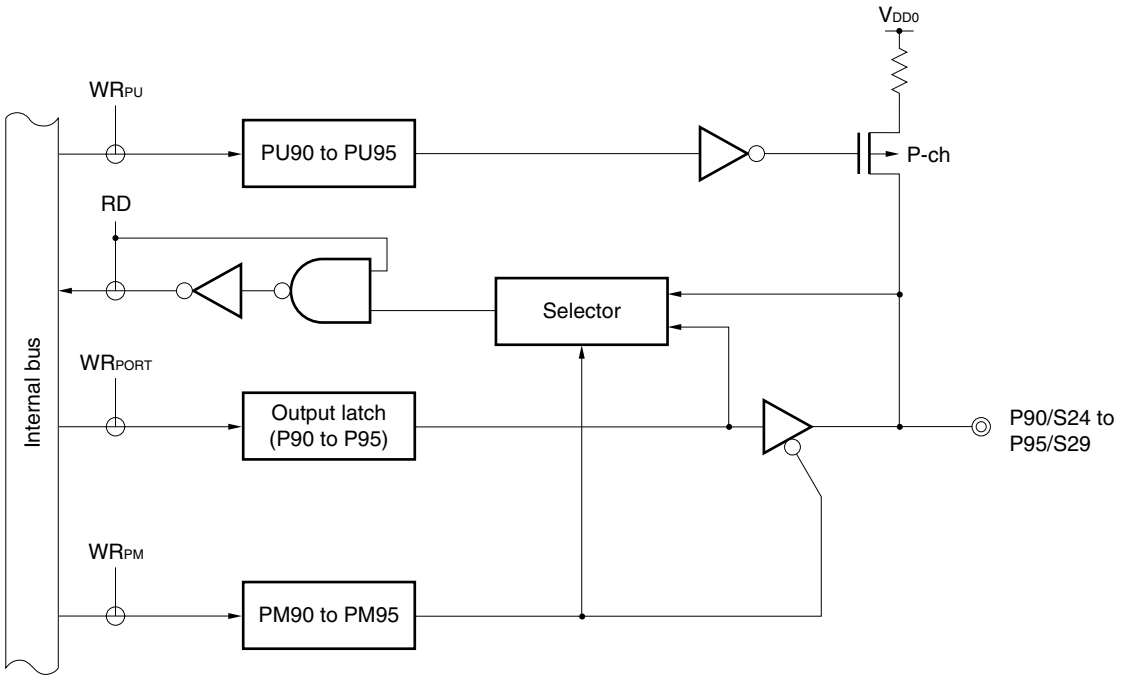

PU: Pull-up resistor option register
PM: Port mode register
RD: Port 9 read signal
WR: Port 9 write signal

Caution For the control of the LCD controller's segment signal output block, refer to CHAPTER 16 LCD CONTROLLER/DRIVER.

4.3 Port Function Control Registers

The following three types of registers control the ports.

- Port mode registers (PM0, PM2 to PM9)
- Pull-up resistor option registers (PU0, PU2 to PU9)
- Port function control registers (PF7 to PF9)

(1) Port mode registers (PM0, PM2 to PM9)

These registers set the corresponding ports to input or output mode in 1-bit units.

PM0 and PM2 to PM9 are manipulated with a 1-bit or 8-bit memory manipulation instruction.

$\overline{\text{RESET}}$ input sets these registers to FFH.

Cautions 1. Since port 0 also functions as the external interrupt request inputs, an interrupt request flag is set when a port pin is specified in output mode and its output level is changed. Therefore, be sure to set the interrupt mask flag to 1 when using a port 0 pin in the output mode.

2. Even if a pin in port 0 or port 2 to port 9 is set to the output mode, a pull-up resistor that has been connected will not be disconnected. Therefore, be sure to set the bit of the corresponding pull-up resistor option register to 0 when using a pin in the output mode.

Figure 4-16. Format of Port Mode Registers (PM0 and PM2 to PM9)

Address: FF20H After reset: FFH R/W

Symbol	7	6	5	4	3	2	1	0
PM0	1	PM06	PM05	PM04	PM03	PM02	PM01	PM00

Address: FF22H After reset: FFH R/W

Symbol	7	6	5	4	3	2	1	0
PM2	PM27	PM26	PM25	PM24	PM23	PM22	PM21	PM20

Address: FF23H After reset: FFH R/W

Symbol	7	6	5	4	3	2	1	0
PM3	PM37	PM36	PM35	PM34	PM33	PM32	PM31	PM30

Address: FF24H After reset: FFH R/W

Symbol	7	6	5	4	3	2	1	0
PM4	PM47	PM46	PM45	PM44	PM43	PM42	PM41	PM40

Address: FF25H After reset: FFH R/W

Symbol	7	6	5	4	3	2	1	0
PM5	PM57	PM56	PM55	PM54	PM53	PM52	PM51	PM50

Address: FF26H After reset: FFH R/W

Symbol	7	6	5	4	3	2	1	0
PM6	PM67	PM66	PM65	PM64	PM63	PM62	PM61	PM60

Address: FF27H After reset: FFH R/W

Symbol	7	6	5	4	3	2	1	0
PM7	PM77	PM76	PM75	PM74	PM73	PM72	PM71	PM70

Address: FF28H After reset: FFH R/W

Symbol	7	6	5	4	3	2	1	0
PM8	PM87	PM86	PM85	PM84	PM83	PM82	PM81	PM80

Address: FF29H After reset: FFH R/W

Symbol	7	6	5	4	3	2	1	0
PM9	1	1	PM95	PM94	PM93	PM92	PM91	PM90

PMmn	Pmn pin input/output mode selection (m = 0, 2 to 9: n = 0 to 7)
0	Output mode (output buffer on)
1	Input mode (output buffer off)

(2) Pull-up resistor option registers (PU0, PU2 to PU9)

These registers set whether to use an on-chip pull-up resistor at each port pin. When a bit of PU0 or PU2 to PU9 is set to 1, an on-chip pull-up resistor is connected to the corresponding pin irrespective of the port mode setting. Therefore, when a port pin is set to the output mode, it is necessary to set the corresponding bit of PU0 or PU2 to PU9 to 0.

PU0 and PU2 to PU9 are manipulated with a 1-bit or 8-bit memory manipulation instruction.

$\overline{\text{RESET}}$ input sets these registers to 00H.

Figure 4-17. Format of Pull-up Resistor Option Registers (PU0 and PU2 to PU9)

Address: FF30H After reset: 00H R/W

Symbol	7	6	5	4	3	2	1	0
PU0	0	PU06	PU05	PU04	PU03	PU02	PU01	PU00

Address: FF32H After reset: 00H R/W

Symbol	7	6	5	4	3	2	1	0
PU2	PU27	PU26	PU25	PU24	PU23	PU22	PU21	PU20

Address: FF33H After reset: 00H R/W

Symbol	7	6	5	4	3	2	1	0
PU3	PU37	PU36	PU35	PU34	PU33	PU32	PU31	PU30

Address: FF34H After reset: 00H R/W

Symbol	7	6	5	4	3	2	1	0
PU4	PU47	PU46	PU45	PU44	PU43	PU42	PU41	PU40

Address: FF35H After reset: 00H R/W

Symbol	7	6	5	4	3	2	1	0
PU5	PU57	PU56	PU55	PU54	PU53	PU52	PU51	PU50

Address: FF36H After reset: 00H R/W

Symbol	7	6	5	4	3	2	1	0
PU6	PU67	PU66	PU65	PU64	PU63	PU62	PU61	PU60

Address: FF37H After reset: 00H R/W

Symbol	7	6	5	4	3	2	1	0
PU7	PU77	PU76	PU75	PU74	PU73	PU72	PU71	PU70

Address: FF38H After reset: 00H R/W

Symbol	7	6	5	4	3	2	1	0
PU8	PU87	PU86	PU85	PU84	PU83	PU82	PU81	PU80

Address: FF39H After reset: 00H R/W

Symbol	7	6	5	4	3	2	1	0
PU9	0	0	PU95	PU94	PU93	PU92	PU91	PU90

PUmn	Pmn pin on-chip pull-up resistor connection selection (m = 0, 2 to 9: n = 0 to 7)
0	On-chip pull-up resistor not used.
1	On-chip pull-up resistor used.

(3) Port function control registers (PF7 to PF9)

These registers set whether to use pins in ports 7 to 9 as I/O port pins or as segment output pins.

When a pin in ports 7 to 9 are used as a segment output pin by setting the corresponding bit of PF7 to PU9 to 1, the values of port mode registers 7 to 9 (PM7 to PM9) and the output latch become invalid.

If a bit of PF7 to PF9 is set to 1, be sure to set the corresponding bit of pull-up resistor option registers 7 to 9 (PU7 to PU9) to 0.

PF7 to PF9 are manipulated with a 1-bit or 8-bit memory manipulation instruction.

$\overline{\text{RESET}}$ input sets these registers to 00H.

Figure 4-18. Format of Port Function Control Registers (PF7 to PF9)

Address: FF57H After reset: 00H R/W

Symbol	7	6	5	4	3	2	1	0
PF7	PF77	PF76	PF75	PF74	PF73	PF72	PF71	PF70

Address: FF58H After reset: 00H R/W

Symbol	7	6	5	4	3	2	1	0
PF8	PF87	PF86	PF85	PF84	PF83	PF82	PF81	PF80

Address: FF59H After reset: 00H R/W

Symbol	7	6	5	4	3	2	1	0
PF9	0	0	PF95	PF94	PF93	PF92	PF91	PF90

PF7m, PF8m, PF9n	P7m, P8m, P9n pin function selection (m = 0 to 7, n = 0 to 5)
0	Functions as an I/O port pin.
1	Functions as a segment output pin.

4.4 Port Function Operations

Port function operations differ depending on whether the port is set to input or output mode, as described below.

4.4.1 Writing to I/O ports

(1) In output mode

A value can be written to the output latch of a port by using a transfer instruction. The contents of the output latch can be output from the pins.

Data once written to the output latch is retained until new data is written to the output latch.

(2) In input mode

A value can be written to the output latch by using a transfer instruction. However, the status of the port pin does not change because the output buffer is off.

Data once written to the output latch is retained until new data is written to the output latch.

Caution A 1-bit memory manipulation instruction is executed to manipulate 1 bit of a port. At this time, however, this instruction accesses the port in 8-bit units. When the instruction is executed to a port in which both input-mode pins and output-mode pins exist, therefore, the contents of the output latch of the pin, which is set in the input mode and not subject to manipulation, become undefined.

4.4.2 Reading from I/O ports

(1) In output mode

The contents of the output latch can be read by using a transfer instruction. The contents of the output latch do not change.

(2) In input mode

The status of a pin can be read by using a transfer instruction. The contents of the output latch do not change.

4.4.3 Arithmetic operations on I/O ports

(1) In output mode

An arithmetic operation can be performed on the contents of the output latch. The result of the operation is written to the output latch. The contents of the output latch are output from the port pins.

Data once written to the output latch is retained until new data is written to the output latch.

(2) In input mode

The contents of the output latch become undefined. However, the status of the pin does not change because the output buffer is off.

Caution A 1-bit memory manipulation instruction is executed to manipulate 1 bit of a port. At this time, however, this instruction accesses the port in 8-bit units. When the instruction is executed to a port in which both input-mode pins and output-mode pins exist, therefore, the contents of the output latch of the pin, which is set in the input mode and not subject to manipulation, become undefined.

4.5 Mask Option Selection

The following mask option is provided in the mask-ROM versions (μPD780957(A) and 780958(A)).

Table 4-4. Mask Option of Mask-ROM Version

Pin Name	Mask Option
★ P60 to P62, $\overline{\text{RESET}}$	Pull-up resistors can be incorporated in 1-bit units.

CHAPTER 5 CLOCK GENERATOR

5.1 Clock Generator Functions

The clock generator generates the clock to be supplied to the CPU and peripheral hardware. The following three types of system clock oscillators are available.

(1) Main system clock (RC) oscillator

★ This circuit oscillates at frequency of 1.2 MHz. Oscillation can be stopped by setting the processor clock control register (PCC).

(2) Subsystem clock 1 oscillator

This circuit oscillates at frequency of 32.768 kHz. Oscillation cannot be stopped.

(3) Subsystem clock 2 oscillator

This circuit oscillates at frequency of 4.91 MHz. Start and stop of subsystem clock 2 oscillation can be set using the SUB2 clock control register (CKC).

5.2 Clock Generator Configuration

The clock generator consists of the following hardware.

Table 5-1. Configuration of Clock Generator

Item	Configuration
Control registers	Processor clock control register (PCC) SUB2 clock control register (CKC)
Oscillators	Main system clock oscillator Subsystem clock 1 and 2 oscillators

Figure 5-1 shows the block diagram of the clock generator.

★ **Figure 5-1. Block Diagram of Clock Generator**

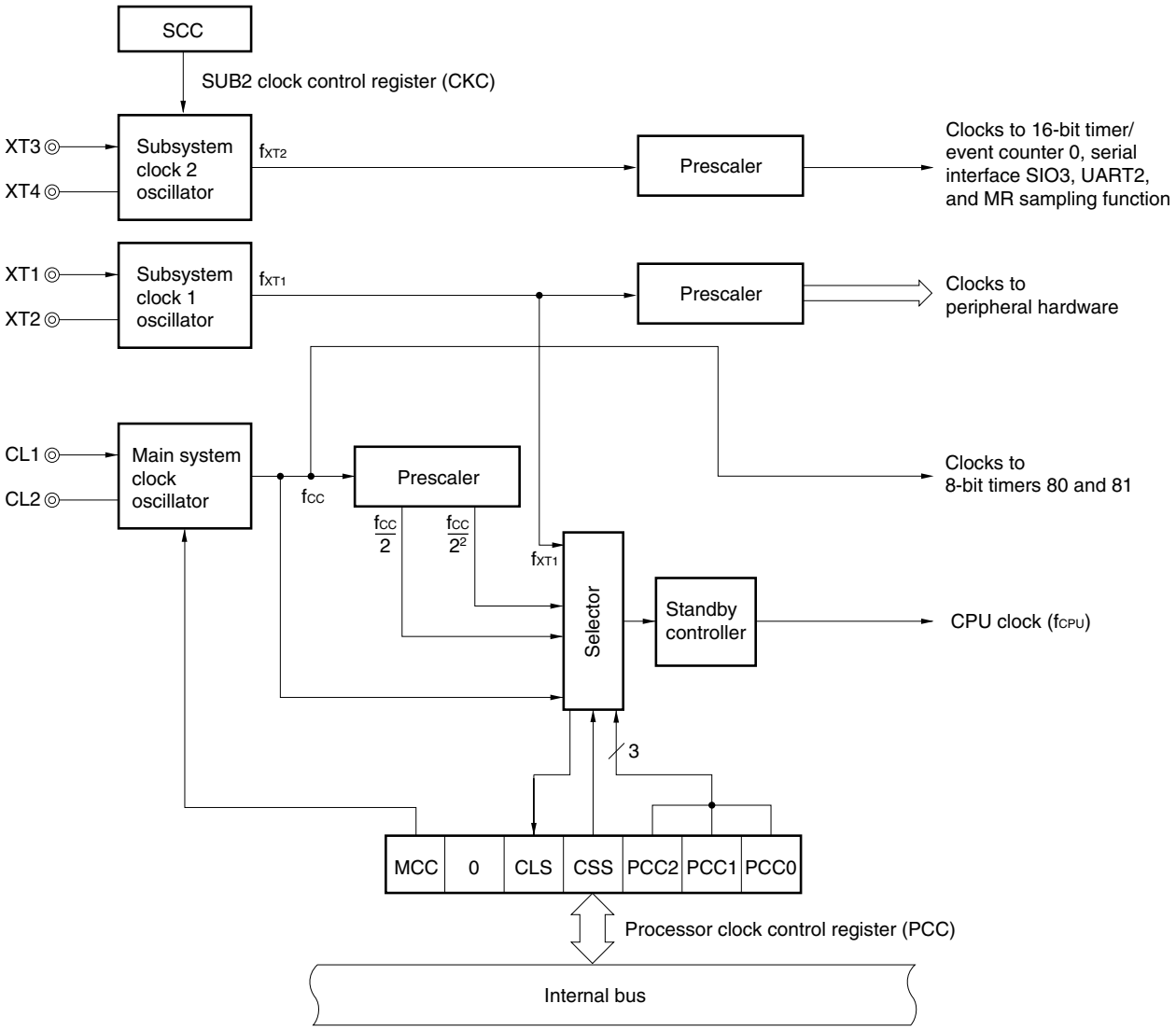

★ **Table 5-2. System Clock Supplied to Each Peripheral Hardware**

Peripheral Hardware	System Clock
Serial interface SIO3	Operates with subsystem clock 1 or 2
Serial interface UART2	
16-bit timer/event counter 0	
16-bit timer/event counter 2	Operates with subsystem clock 1
8-bit timer 80	Operates with main system clock or subsystem clock 1
8-bit timer 81	
8-bit timer 82	Operates with subsystem clock 1
8-bit timer 83	
Watchdog timer	
MR sampling function	Operates with subsystem clock 1 or 2
Sampling output timer/detector	Operates with subsystem clock 1
LCD controller/driver	
Clock output controller	

Remark Main system clock: 1.2 MHz (RC oscillation)
Subsystem clock 1: 32.768 kHz
Subsystem clock 2: 4.91 MHz

5.3 Clock Generator Control Registers

The following two registers are used to control the clock generator.

- Processor clock control register (PCC)
- SUB2 clock control register (CKC)

(1) Processor clock control register (PCC)

PCC is a register that selects the CPU clock, sets the division ratio, and specifies whether to operate or stop the main system clock oscillator.

PCC is set with a 1-bit or 8-bit memory manipulation instruction.

$\overline{\text{RESET}}$ input sets PCC to 04H.

★ **Figure 5-2. Format of Processor Clock Control Register (PCC)**

Address: FFFBH After reset: 04H R/W[Note 1]

Symbol	7	6	5	4	3	2	1	0
PCC	MCC	0	CLS	CSS	0	PCC2	PCC1	PCC0

MCC	Main system clock oscillation control[Note 2]
0	Oscillation possible
1	Oscillation stopped

CLS	CPU clock status
0	Main system clock
1	Subsystem clock 1

CSS	PCC2	PCC1	PCC0	CPU clock (f_{CPU}) selection
0	0	0	0	f_{CC}
	0	0	1	$f_{CC}/2$
	0	1	0	$f_{CC}/2^2$
1	0	0	0	f_{XT1}
	0	0	1	
	0	1	0	
Other than above				Setting prohibited

Notes 1. Bit 5 is a read-only bit.

2. When the CPU is operating with subsystem clock 1, use the MCC bit to stop the main system clock oscillation.

Cautions 1. Bits 3 and 6 must be set to 0.

2. PCC = 04H ($f_{CC}/2^4$) only during reset. After reset, be sure to set PCC to either 00H, 01H, or 02H before subsystem clock 1 operation begins (otherwise correct clock switching will not be possible).

3. When changing the CPU clock from the main system clock to subsystem clock 1 and stopping the main system clock oscillation (bit 7 (MCC) set to 1), be sure to confirm that the CPU clock is completely switched to subsystem clock 1 (CLS is set to 1) before stopping the oscillation.

4. Do not change the value of bits 4 (CSS) and 7 (MCC) at the same time; otherwise malfunction may occur.

Remarks 1. f_{CC}: Main system clock oscillation frequency

2. f_{XT1}: Subsystem clock 1 oscillation frequency

(2) SUB2 clock control register (CKC)

CKC is a register that specifies whether to operate or stop the subsystem clock 2 oscillator.

CKC is set with a 1-bit memory manipulation instruction.

$\overline{\text{RESET}}$ input sets CKC to 00H.

Figure 5-3. Format of SUB2 Clock Control Register (CKC)

Address: FF69H After reset: 00H R/W

Symbol	7	6	5	4	3	2	1	0
CKC	0	0	0	0	0	0	0	SCC

SCC	SUB2 clock oscillation control
0	Oscillation stopped
1	Oscillation possible

Caution When SUB2 clock oscillation is stopped by setting SCC to 0 and then started again, the oscillation stabilization time wait function will not be performed. Therefore, when using the SUB2 clock as a clock for peripherals, use it after the oscillation stabilization time has elapsed.

The fastest instruction of the μPD780958 Subseries is executed in two CPU clocks. Therefore, the relationship between the CPU clock (f_{CPU}) and the minimum instruction execution time is as shown in Table 5-3.

★ **Table 5-3. Relationship Between CPU Clock and Minimum Instruction Execution Time**

CPU Clock (f_{CPU})	Minimum Instruction Execution Time: $2/f_{CPU}$
f_{CC}	1.7 μs
$f_{CC}/2$	3.4 μs
$f_{CC}/2^2$	6.7 μs
f_{XT1}	61 μs

Remarks 1. When operating at f_{CC} = 1.2 MHz (f_{CC}: Main system clock oscillation frequency)

2. When operating at f_{XT1} = 32.768 kHz (f_{XT1}: Subsystem clock 1 oscillation frequency)

5.4 Main System Clock Oscillator

5.4.1 Main system clock oscillator

★ The main system clock oscillator is oscillated using the resistor (R) and capacitor (C) (1.2 MHz TYP.) connected to the CL1 and CL2 pins.

Figure 5-4 shows the external circuit of the main system clock oscillator.

★ **Figure 5-4. External Circuit of Main System Clock Oscillator**

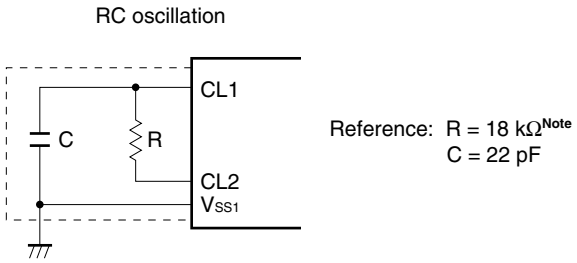

Note The oscillation frequency is influenced by the electrical characteristics (wiring capacitance, wiring resistance, etc.) and temperature of the set. Moreover, as there are also variations in characteristics among devices, determine the optimum CR value based on evaluations performed on the set.

Caution When using the main system clock oscillator, wire as follows in the area enclosed by the broken lines in Figure 5-4 to avoid an adverse effect from wiring capacitance.

- **Keep the wiring length as short as possible.**
- **Do not cross the wiring with the other signal lines. Do not route the wiring near a signal line through which a high fluctuating current flows.**
- **Always make the ground point of the oscillator capacitor the same potential as V_{SS1}. Do not ground the capacitor to a ground pattern through which a high current flows.**
- **Do not fetch signals from the oscillator.**

Figure 5-5 shows examples of incorrect resonator connection.

Figure 5-5. Examples of Incorrect Resonator Connection (1/2)

(a) Wiring of connection circuits is too long

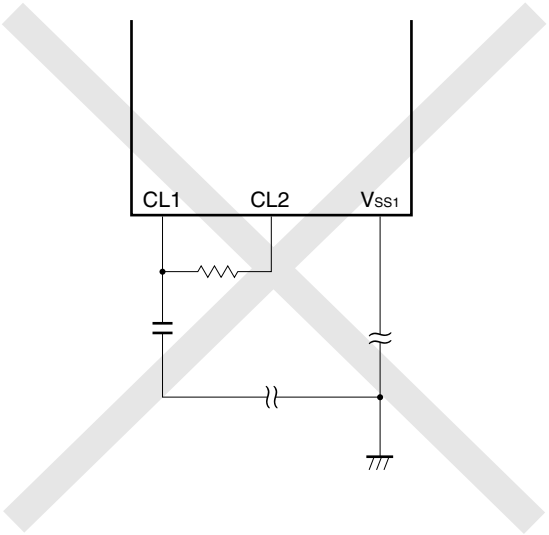

(b) Signal conductors are intersecting

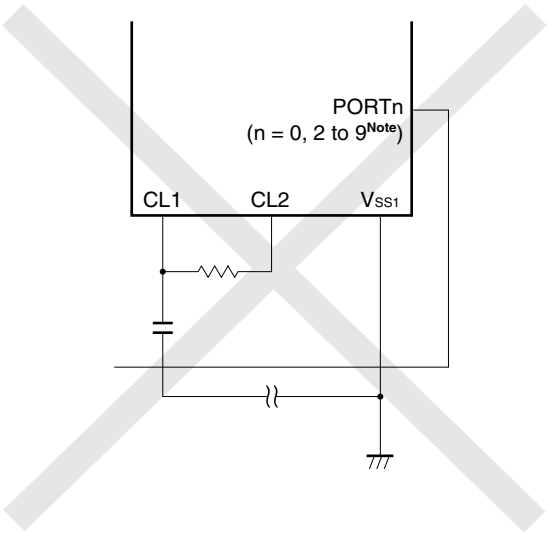

Note For port 6, only applies to pins P63 to P67.

Figure 5-5. Examples of Incorrect Resonator Connection (2/2)

(c) Changing high current is too near a signal conductor

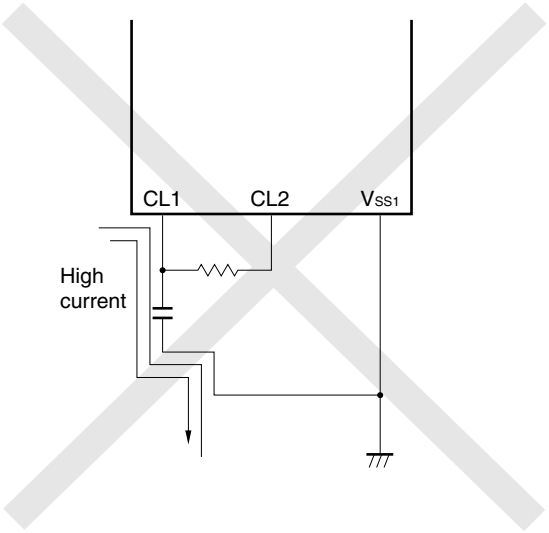

(d) Current flows through the grounding line of the oscillator (potential at points A and B fluctuates)

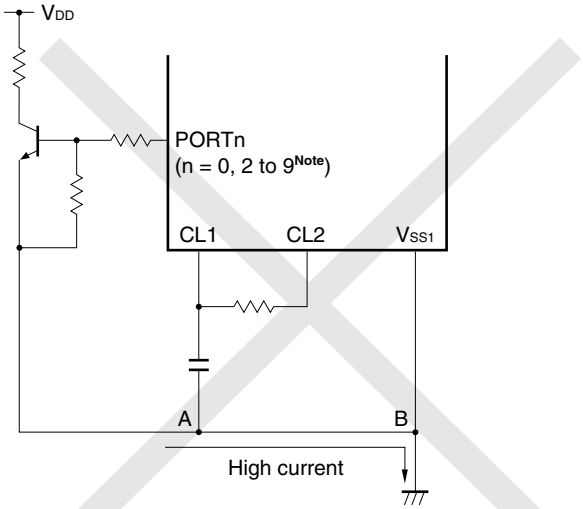

(e) Signals are fetched

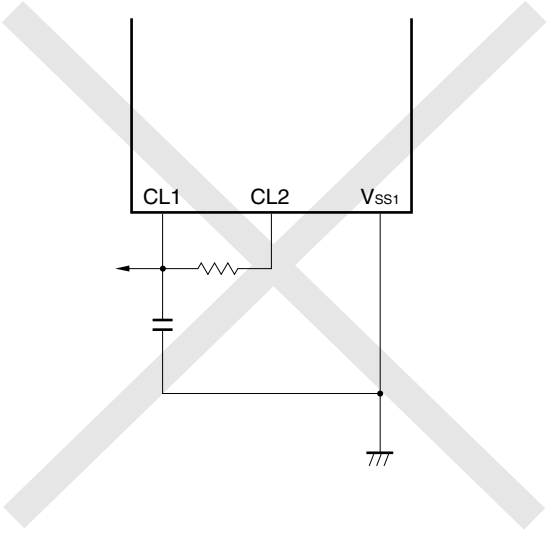

Note For port 6, only applies to pins P63 to P67.

5.4.2 Subsystem clock 1 oscillator

The subsystem clock 1 oscillator is oscillated by the crystal resonator (32.768 kHz TYP.) connected to the XT1 and XT2 pins.

Figure 5-6 shows the external circuit of the subsystem clock 1 oscillator.

Figure 5-6. External Circuit of Subsystem Clock 1 Oscillator

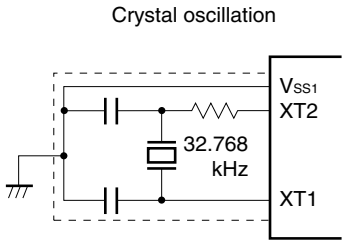

Caution When using the subsystem clock 1 oscillator, wire as follows in the area enclosed by the broken lines in Figure 5-6 to avoid an adverse effect from wiring capacitance.

- **Keep the wiring length as short as possible.**
- **Do not cross the wiring with the other signal lines. Do not route the wiring near a signal line through which a high fluctuating current flows.**
- **Always make the ground point of the oscillator capacitor the same potential as V_{SS1}. Do not ground the capacitor to a ground pattern through which a high current flows.**
- **Do not fetch signals from the oscillator.**

Since the subsystem clock 1 oscillator is designed as a low-amplitude circuit for reducing current consumption, particular care is required with the wiring method when subsystem clock 1 is used.

Figure 5-7 shows examples of incorrect resonator connection.

Figure 5-7. Examples of Incorrect Resonator Connection (1/2)

(a) Wiring of connection circuits is too long

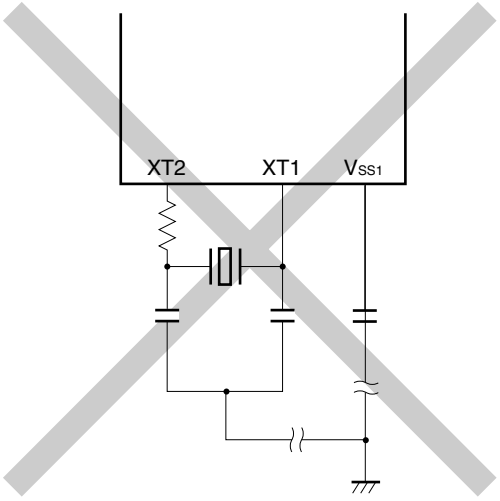

(b) Signal conductors are intersecting

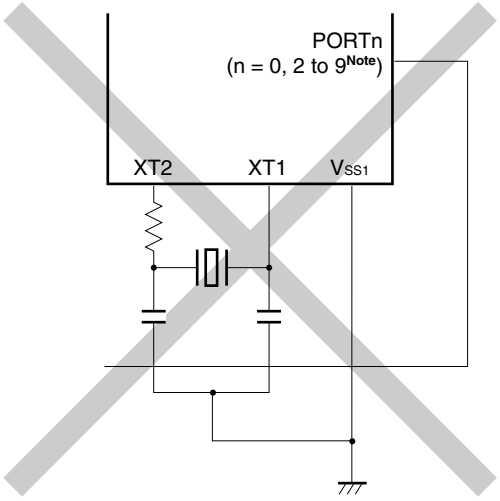

Note For port 6, only applies to pins P63 to P67.

Figure 5-7. Examples of Incorrect Resonator Connection (2/2)

(c) Changing high current is too near a signal conductor

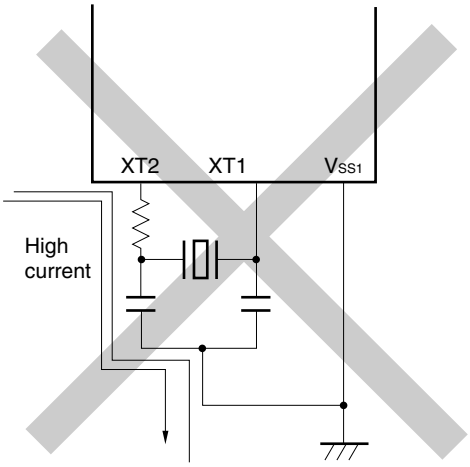

(d) Current flows through the grounding line of the oscillator (potential at points A, B, and C fluctuates)

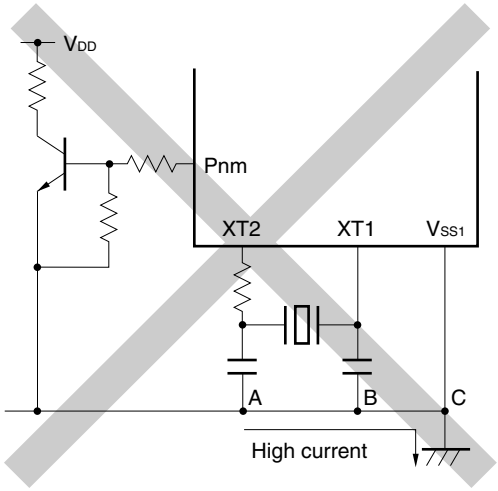

(e) Signals are fetched

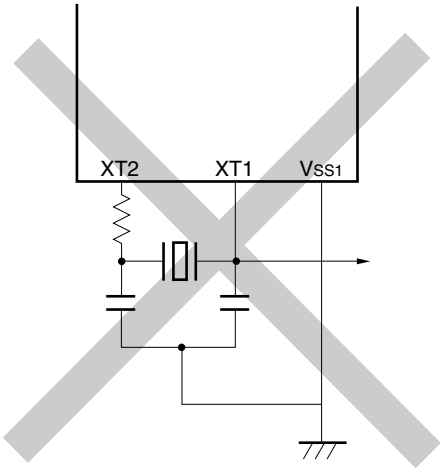

5.4.3 Divider

The divider divides the output of the subsystem clock 1 oscillator output (f_{XT1}) to generate various clocks.

5.4.4 Subsystem clock 2 oscillator

The subsystem clock 2 oscillator is oscillated by the crystal resonator (4.91 MHz TYP.) connected to the XT3 and XT4 pins.

An external clock can also be input to the circuit. In this case, input the clock signal to the X3 pin, and input the reversed signal to the X4 pin.

Figure 5-8 shows the external circuit of the subsystem clock 2 oscillator.

Figure 5-8. External Circuit of Subsystem Clock 2 Oscillator

(a) Crystal oscillation

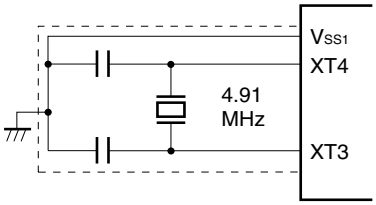

(b) External clock

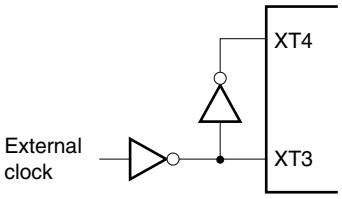

Cautions 1. Subsystem clock 2 cannot be used as the CPU clock.

2. When using the main system clock and the subsystem clock 2 oscillator, wire as follows in the area enclosed by the broken lines in Figure 5-8 to avoid an adverse effect from wiring capacitance.

- **Keep the wiring length as short as possible.**
- **Do not cross the wiring with the other signal lines. Do not route the wiring near a signal line through which a high fluctuating current flows.**
- **Always make the ground point of the oscillator capacitor the same potential as V_{SS1}. Do not ground the capacitor to a ground pattern through which a high current flows.**
- **Do not fetch signals from the oscillator.**

Since the subsystem clock 2 oscillator is designed as a low-amplitude circuit for reducing current consumption, particular care is required with the wiring method when subsystem clock 2 is used.

Figure 5-9 shows examples of incorrect resonator connection.

Figure 5-9. Examples of Incorrect Resonator Connection (1/2)

(a) Wiring of connection circuits is too long

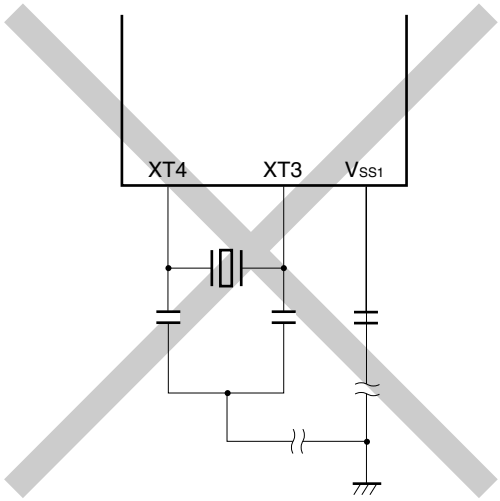

(b) Signal conductors are intersecting

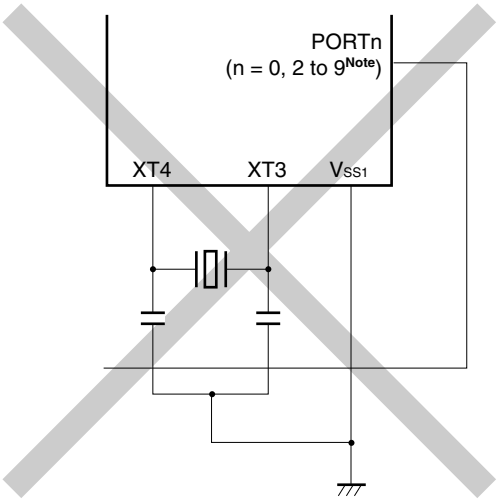

Note For port 6, only applies to pins P63 to P67.

Figure 5-9. Examples of Incorrect Resonator Connection (2/2)

(c) Changing high current is too near a signal conductor

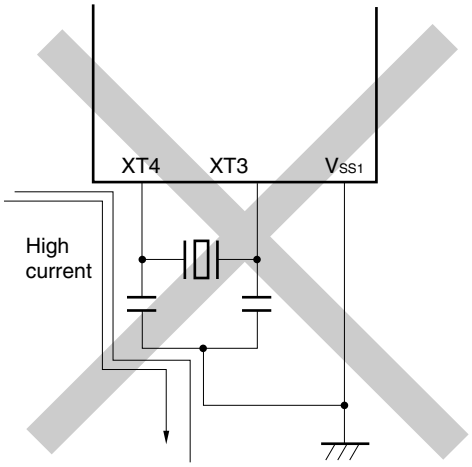

(d) Current flows through the grounding line of the oscillator (potential at points A, B, and C fluctuates)

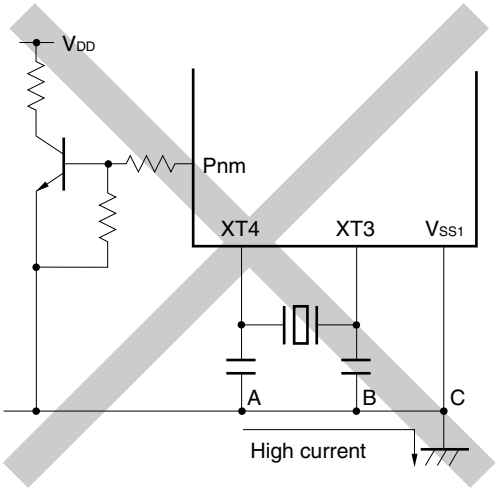

(e) Signals are fetched

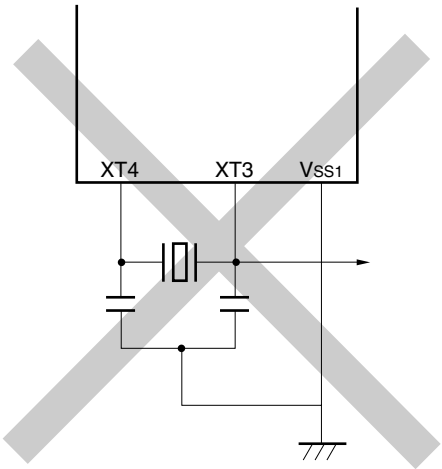

5.5 Clock Generator Operations

The clock generator generates the following clocks and controls the operation modes of the CPU, such as the standby mode.

★
- Main system clock f_{CC}
- Subsystem clock 1 f_{XT1}
- Subsystem clock 2 f_{XT2}
- CPU clock f_{CPU}
- Clock to peripheral hardware

The following clock generator functions and operations are determined with the processor clock control register (PCC).

★ (a) The $\overline{\text{RESET}}$ signal sets the processor clock control register (PCC) to 04H[Note]. Note that while a low-level signal is being input to the $\overline{\text{RESET}}$ pin, oscillation of the main system clock is stopped.

Note Be sure to set PCC to either 00H, 01H, or 02H before subsystem clock 1 operation begins (otherwise correct clock switching will not be possible).

★ (b) While the main system clock is selected, three types of minimum instruction execution time (1.7 μs, 3.4 μs, and 6.7 μs: @ 1.2 MHz operation) can be selected by setting PCC.

(c) HALT mode is available while the main system clock is selected.

(d) Low-current consumption operation (61 μs: @ 32.768 kHz operation) is available with subsystem clock 1, which is selected by setting PCC.

(e) While subsystem clock 1 is selected, the main system clock oscillation can be stopped by setting PCC. At this time the HALT mode can be used.

(f) The peripheral functions that are connected to subsystem clocks 1 and 2 can be used even if HALT mode is entered.

(g) The SUB2 clock control register (CKC) is used to control subsystem clock 2. Subsystem clock 2 can be used as the clock for TM0, MRTD0, SIO3, and UART2.

Caution Subsystem clock 2 cannot be used as the CPU clock.

★ **5.5.1 Main system clock operations**

When the device operates with the main system clock (with bit 5 (CLS) of the processor clock control register (PCC) set to 0), the minimum instruction execution time can be changed by setting bits 0 to 2 (PCC0 to PCC2) of PCC.

Figure 5-10. Main System Clock Stop Function
(Operation when MCC is set to 1 after setting CSS to 1 during main system clock operation)

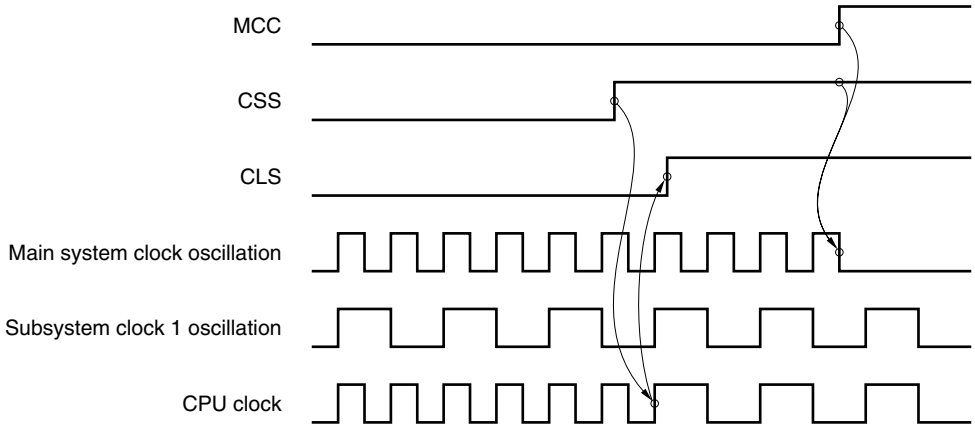

5.5.2 Subsystem clock 1 operations

When the device operates with subsystem clock 1 (with bit 5 (CLS) of the processor clock control register (PCC) set to 1), the operation is carried out as below.

- The minimum instruction execution time remains constant (61 μs: @ 32.768 kHz operation) irrespective of the setting of bits 0 to 2 (PCC0 to PCC2) of PCC.

5.6 Changing System Clock and CPU Clock Settings

5.6.1 Time required for switchover between system clock and CPU clock

The system clock and CPU clock can be switched over by setting bits 0 to 2 (PCC0 to PCC2) and bit 4 (CSS) of PCC.

The actual switchover operation is not performed immediately after writing to PCC. Operation continues on the pre-switchover clock for several instructions (refer to **Table 5-4**).

Whether the system is operated on the main system clock or the subsystem clock 1 can be checked using bit 5 (CLS) of PCC.

Table 5-4. Maximum Time Required for CPU Clock Switchover

Set Value Before Switchover				Set Value After Switchover															
CSS	PCC2	PCC1	PCC0	CSS	PCC2	PCC1	PCC0	CSS	PCC2	PCC1	PCC0	CSS	PCC2	PCC1	PCC0	CSS	PCC2	PCC1	PCC0
				0	0	0	0	0	0	0	1	0	0	1	0	1	×	×	×
0	0	0	0					16 instructions				16 instructions				$f_{CC}/2f_{XT}$ instruction (31 instructions)			
	0	0	1	8 instructions								8 instructions				$f_{CC}/4f_{XT}$ instruction (16 instructions)			
	0	1	0	4 instructions				4 instructions								$f_{CC}/8f_{XT}$ instruction (8 instructions)			
1	×	×	×	1 instruction				1 instruction				1 instruction							

Remarks 1. The execution time of one instruction is the minimum instruction execution time with the pre-switchover CPU clock.

★ **2.** Figures in parentheses apply to operation with f_{CC} = 1.2 MHz or f_{XT1} = 32.768 kHz.

Caution Do not set the CPU clock selection (by setting PCC0 to PCC2) and switchover from the main system clock to subsystem clock 1 (changing CSS from 0 to 1) simultaneously.
Simultaneous setting is possible, however, for the CPU clock division selection (by setting bits PCC0 to PCC2) and switchover from the subsystem clock 1 to the main system clock (changing CSS from 1 to 0).

★ **5.6.2 System clock and CPU clock switching procedure**

This section describes the procedure for switching between the system clock and CPU clock.

Figure 5-11. System Clock and CPU Clock Switching

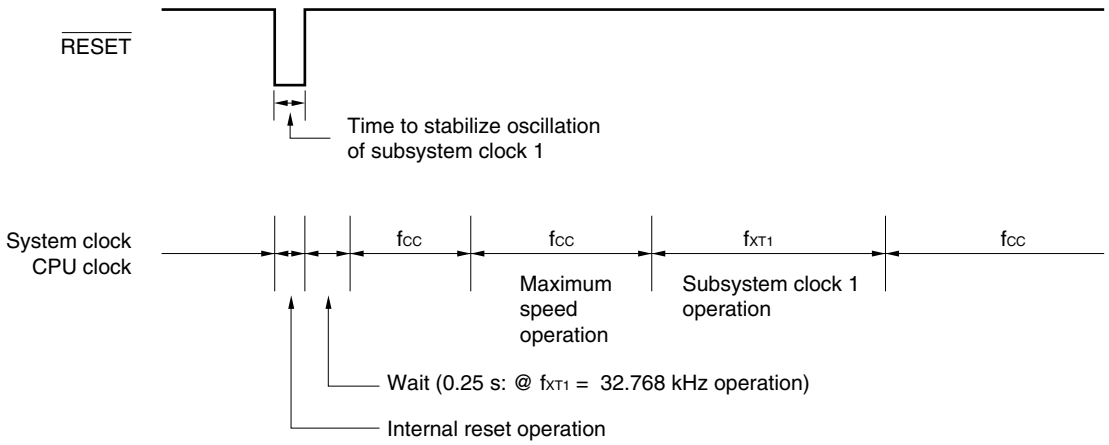

<1> The CPU is reset by setting the $\overline{\text{RESET}}$ signal to low after power-on. After that, reset is released if the $\overline{\text{RESET}}$ signal is set to high, and the main system clock starts oscillating. At this time, the oscillation stabilization time (0.25 s: f_{XT1} = 32.768 kHz operation) is secured automatically.
The CPU then starts executing instructions at the minimum speed of the main system clock $f_{CC}/2^4$ (PCC = 04H[Note]).

<2> Overwrite the processor clock control register (PCC) to 00H to switch the CPU clock to the highest speed.

<3> Set bit 4 (CSS) of the PCC register to 1 to switch the operation to subsystem clock 1 operation.
If main system clock oscillation is stopped, also set bit 7 (MCC) of the PCC register to 1.

<4> If main system clock oscillation is stopped, set bit 7 (MCC) of the PCC register to 0 to start main system clock oscillation, and then set bit 4 (CSS) of the PCC register to 0 to switch to main system clock operation.

Note Be sure to set PCC to either 00H, 01H, or 02H before subsystem clock 1 operation begins (otherwise correct clock switching will not be possible).

Cautions 1. To achieve low power consumption for this device, the drive voltage of the subsystem clock 1 oscillator is lower than the V_{DD} voltage. However, taking into consideration the characteristics at oscillation start, the drive voltage of the subsystem clock 1 oscillator becomes the V_{DD} voltage during the reset interval.
Therefore, at reset following power application, input a low level for the time required for the subsystem clock 1 oscillation to stabilize.

2. The oscillation of the main system clock stabilizes in 1 clock of subsystem clock 1. Therefore, when the main system clock is stopped and operation is performed using subsystem clock 1, it is not necessary to secure oscillation stabilization time in order to switch back to the main system clock.

3. Input a low level to the $\overline{\text{RESET}}$ pin while the subsystem clock 1 oscillation is stabilizing only immediately after power application.

CHAPTER 6 REAL-TIME OUTPUT FUNCTION

6.1 Real-Time Output Functions

Data set previously in the RTO data register can be transferred to the output latch by hardware concurrently with generation of 8-bit timer 83's interrupt request signal (INTTM83), then output externally. This is called the real-time output function, and the pin outputting data at this time is called the real-time output port.

By using a real-time output port, a signal that has no jitter can be output. This port is therefore suitable for control of stepper motors, etc.

While pins P64 to P67 are being used as real-time output ports, they cannot be used as normal I/O ports.

6.2 Real-Time Output Configuration

The real-time output port consists of the following hardware.

Table 6-1. Configuration of Real-Time Output Port

Item	Configuration
Output buffer register	RTO data registers 10 and 11 (RTO10 and RTO11)
Control registers	RTO reload interrupt compare register 1 (RTC1) RTO operation mode register 1 (RTM1)

Figure 6-1 shows the block diagram of the real-time output port.

Figure 6-1. Block Diagram of Real-Time Output Port 1 (RTO1)

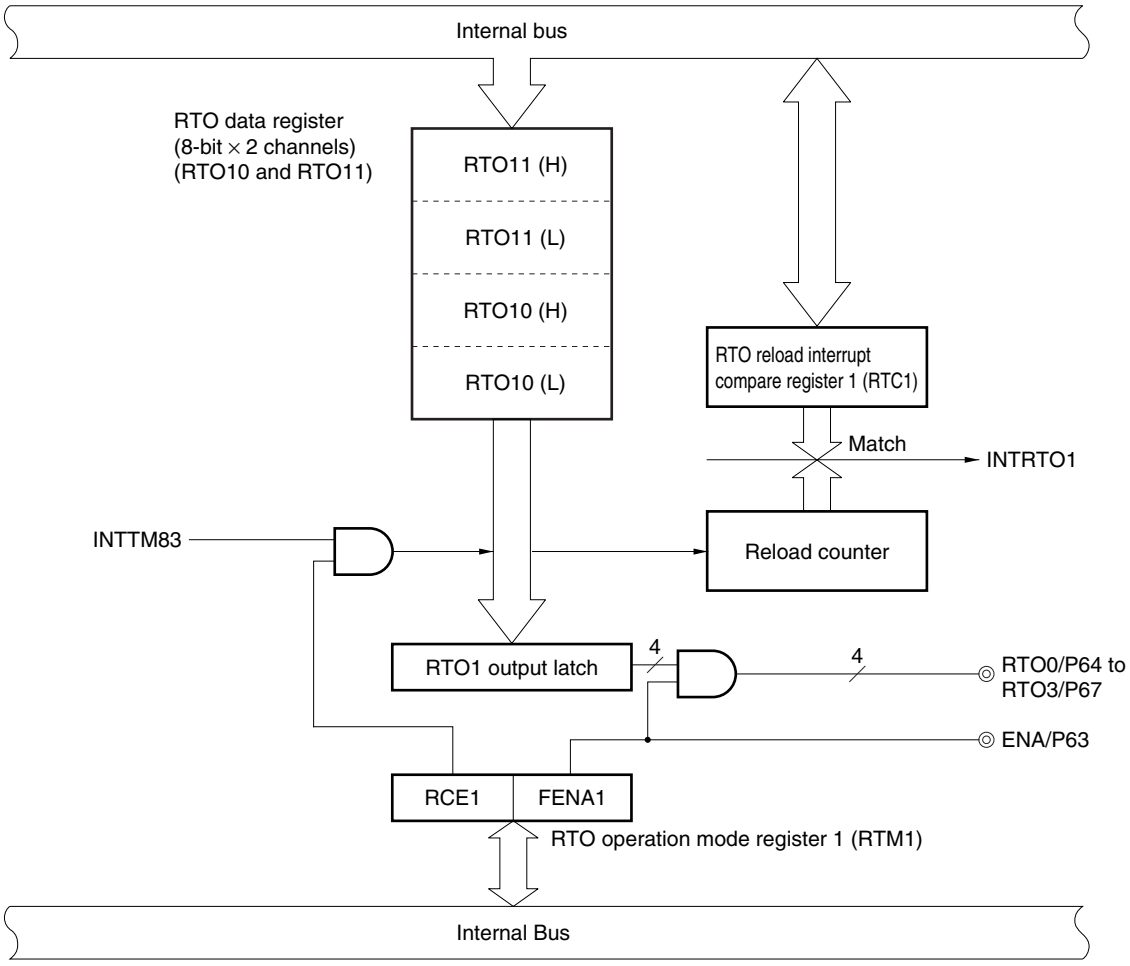

- **RTO data registers 10 and 11 (RTO10 and RTO11)**

  These are write-only 8-bit registers that hold data to be output.

  RTO10 and RTO11 are mapped to separate addresses in the special-function register (SFR) area as shown in the figure below.

Figure 6-2. Configuration of RTO Data Registers 10 and 11 (RTO10 and RTO11)

	Higher 4 bits	Lower 4 bits
FF97H	RTO10 (H, L)	
FF98H	RTO11 (H, L)	

6.3 Real-Time Output Port Control Registers

The following two registers are used to control the real-time output port.

- RTO reload interrupt compare register 1 (RTC1)
- RTO operation mode register 1 (RTM1)

(1) RTO reload interrupt compare register 1 (RTC1)

RTC1 is an 8-bit register that sets the number of reloads for generating an interrupt.

The reload counter counts the number of reloads, and if it matches the value of RTC1, INTRTO1 is output.

RTC1 is set with an 8-bit memory manipulation instruction.

$\overline{\text{RESET}}$ input sets RTC1 to 00H.

(2) RTO operation mode register 1 (RTM1)

RTM1 is a register that selects the operation mode of the real-time output port (real-time output port mode or port mode) and controls RTO1 output.

RTM1 is set with a 1-bit or 8-bit memory manipulation instruction.

$\overline{\text{RESET}}$ input sets RTC1 to 00H.

Figure 6-3. Format of RTO Operation Mode Register 1 (RTM1)

Address: FF9AH After reset: 00H R/W

Symbol	7	6	5	4	3	2	1	0
RTM1	RCE1	0	0	0	0	0	0	FENA1

RCE1	Real-time output operation mode selection
0	Operates in port mode
1	Operates in real-time output port mode

FENA1	RTO1 output control
0	Disables output to real-time output port, and outputs 0 to ENA pin
1	Enables output to real-time output port, and outputs 1 to ENA pin

Cautions 1. For the real-time output function, be sure to set the port that executes real-time output (including the ENA pin) to the output mode. Use port mode register 6 (PM6) to set the output mode, and set the port latch (P63 to P67) to 0.

2. P63 to P67 cannot be used as an I/O port when they are set to be used as a real-time output port.

3. Be sure to stop 8-bit timer 83 operation before making each pin operate as a real-time output pin (set RCE1 to 1).

6.4 Real-Time Output Operation

(1) Initial setting

- Set bit 7 (RCE1) of RTO operation mode register 1 (RTM1) to 0.
- Set RTO reload interrupt compare register 1 (RTC1) to optional values (between 00H and FFH).
- Set pins P64 to P67, which also function as real-time output port pins, to output mode using port mode register 6 (PM6), and set the corresponding port latch to 0.
- Stop the operation of 8-bit timer 83.
- Set the interval time for 8-bit timer 83.
- Set RTO data registers 10 and 11 (RTO10 and RTO11) to optional values.

(2) Enabling real-time output operation

- Set bit 1 (RCE1) of RTM1 to 1, and then set bit 0 (FENA1) of RTM1 to 1. Immediately after RCE1 is set to 1, the lower 4-bit data of RTO10 is automatically transferred to the RTO1 output latch, and immediately after FENA1 is set to 1, the data of the RTO1 output latch is output to RTO0 to RTO3.
- Enable the operation of 8-bit timer 83.
- The data of RTO10 and RTO11 are transferred to the RTO1 output latch in this order and then output to RTO0 to RTO3 in order for every 8-bit timer 83 interval time.

(3) Stopping real-time output operation

- Set bit 0 (FENA1) of RTM1 to 0 to disable data output to RTO0 to RTO3.
- Stop the operation of 8-bit timer 83, and then set bit 7 (RCE1) of RTM1 to 0.

Figure 6-4 shows an example of the real-time output timing.

Figure 6-4. Example of Real-Time Output Timing

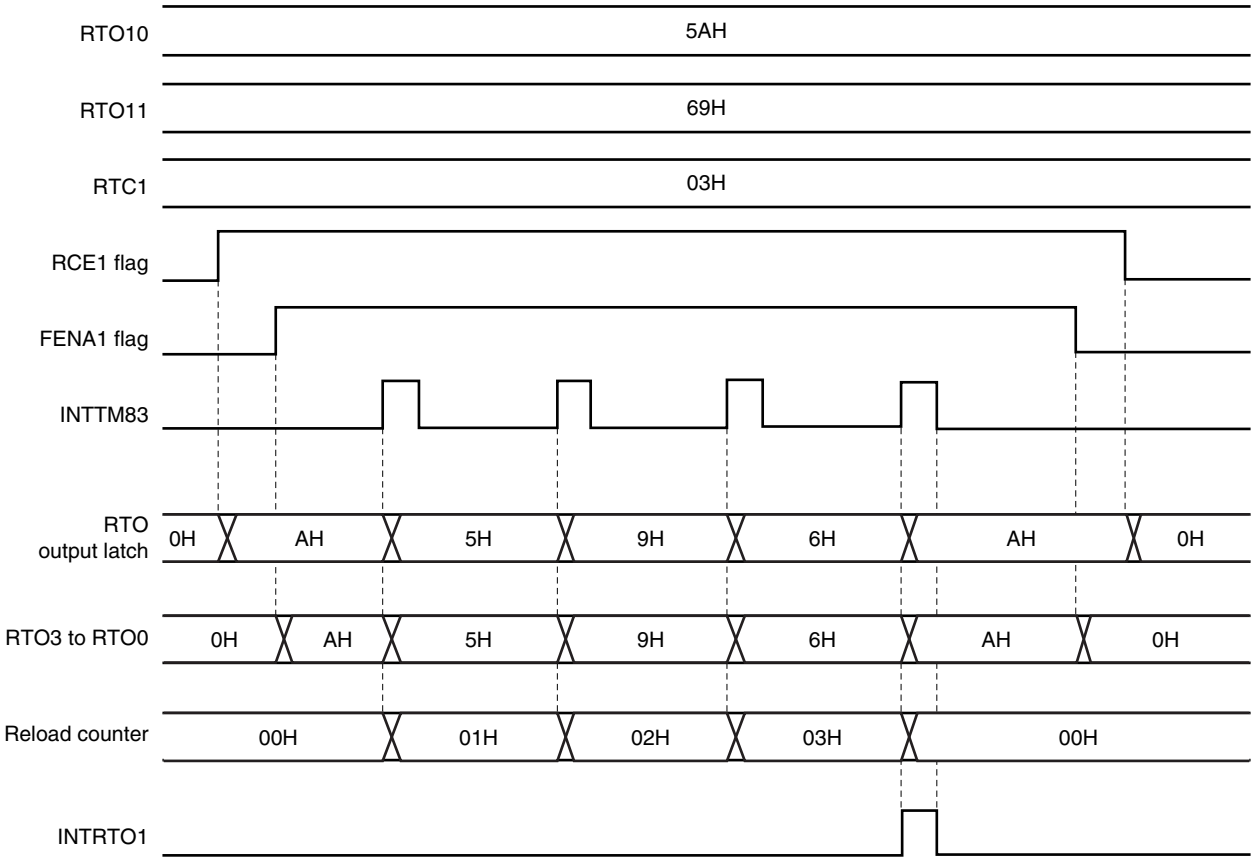

6.5 Real-Time Output Function Operating Cautions

(1) Before enabling a real-time output operation again after it was disabled (by changing RCE1 = 0 to RCE1 = 1), it is necessary to preset the same value as the initial value of the RTO1 output latch to the lower 4 bits of RTO10.

(2) Set bit 7 (RCE1) of RTO operation mode register 1 (RTM1) to 0 before writing to RTO data registers 10 and 11 (RTO10 and RTO11).

(3) Set bit 7 (RCE1) of RTM1 to 0 before accessing RTO reload interrupt compare register 1 (RTC1).

(4) Set the port mode of P64 to P67 to the output mode and set the output latches to 0 before enabling a real-time output operation.

(5) Setting bit 7 (RCE1) of RTM1 to 0 initializes the RTO1 output latches of RTO10 and RTO11 to 00H.

CHAPTER 7 16-BIT TIMER/EVENT COUNTER 0

7.1 Outline of 16-Bit Timer/Event Counter 0

16-bit timer/event counter 0 can be used for various functions including as an interval timer and external event counter, for pulse-width measurement, PPG output, and square-wave output at an optional frequency.

7.2 Functions of 16-Bit Timer/Event Counter 0

16-bit timer/event counter 0 has the following functions.

- Interval timer
- PPG output
- Pulse-width measurement
- External event counter
- Square-wave output

(1) Interval timer

16-bit timer/event counter 0 generates an interrupt request at a preset interval.

(2) PPG output

16-bit timer/event counter 0 can output a rectangular wave whose frequency and output-pulse width can be set freely.

(3) Pulse-width measurement

16-bit timer/event counter 0 can measure the pulse width of an externally input signal.

(4) External event counter

16-bit timer/event counter 0 can measure the number of pulses of an externally input signal.

(5) Square-wave output

16-bit timer/event counter 0 can output a square-wave whose frequency can be set freely.

★ **Figure 7-1. Block Diagram of 16-Bit Timer/Event Counter 0**

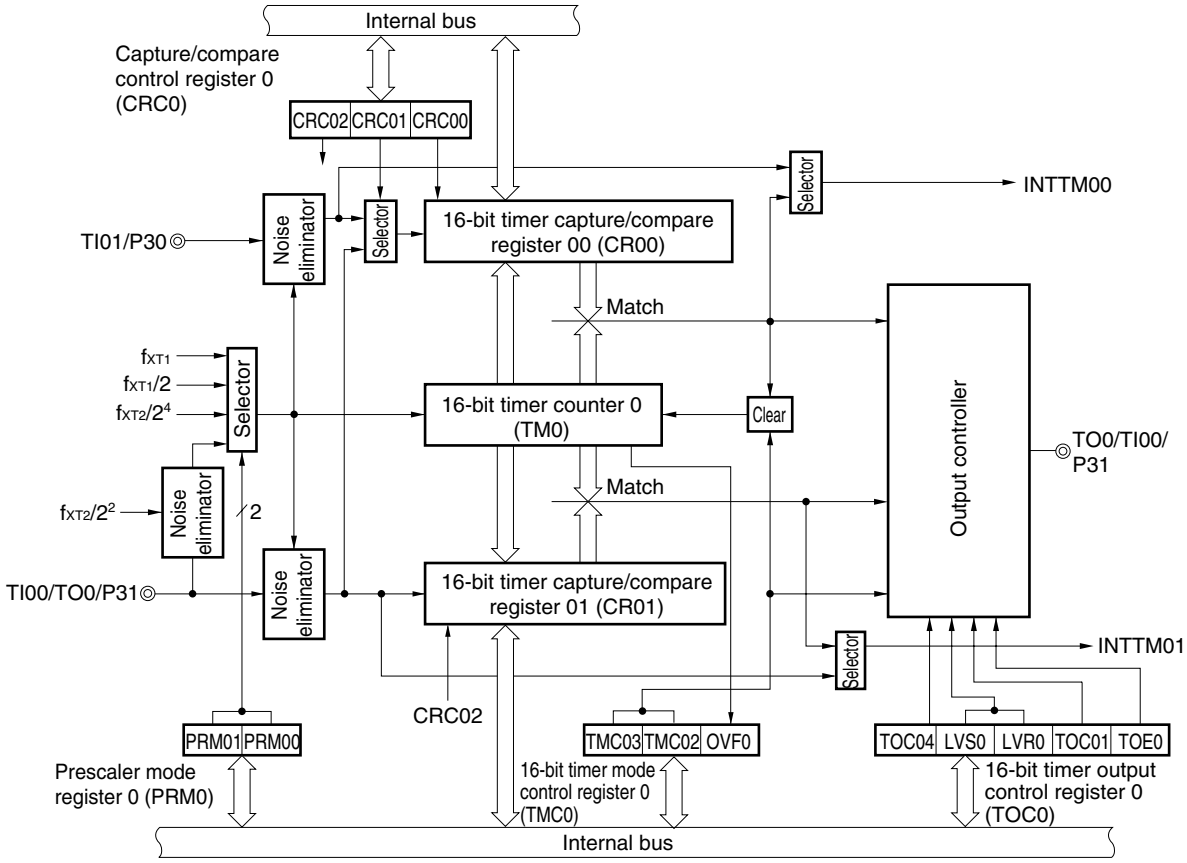

7.3 Configuration of 16-Bit Timer/Event Counter 0

16-bit timer/event counter 0 consists of the following hardware.

Table 7-1. Configuration of 16-Bit Timer/Event Counter 0

Item	Configuration
Timer counter	16 bits × 1 (TM0)
Register	16-bit timer capture/compare register: 16 bits × 2 (CR00 and CR01)
Timer output	1 output (TO0)
Control registers	16-bit timer mode control register 0 (TMC0) Capture/compare control register 0 (CRC0) 16-bit timer output control register 0 (TOC0) Prescaler mode register 0 (PRM0) Port mode register 3 (PM3)[Note]

Note Refer to **Figure 4-5 Block Diagram of P30, P32, and P35** and **Figure 4-6 Block Diagram of P31 and P37**.

(1) 16-bit timer counter 0 (TM0)

TM0 is a 16-bit read-only register that counts the count pulses.

The counter is incremented in synchronization with the rising edge of the input clock. If the count value is read during operation, input of the count clock is temporarily stopped, and the count value at that point is read.

For this reason, errors may occur during counting.

The count value is reset to 0000H in the following cases.

<1> At $\overline{\text{RESET}}$ input
<2> If TMC03 and TMC02 are cleared
<3> If the valid edge of TI0n is input in the clear & start mode by inputting the valid edge of TI0n
<4> If TM0 and CR0n match in the clear & start mode entered on a match between TM0 and CR0n

Remark n = 0 or 1

(2) 16-bit timer capture/compare register 00 (CR00)

CR00 is a 16-bit register that has the functions of both a capture register and a compare register. Whether it is used as a capture register or as a compare register is set by bit 0 (CRC00) of capture/compare control register 0 (CRC0).

- **When CR00 is used as a compare register**

  The value set in CR00 is constantly compared with the 16-bit timer counter 0 (TM0) count value, and an interrupt request (INTTM00) is generated if they match. It can also be used as the register that holds the interval time when TM0 is set to interval timer operation.

- **When CR00 is used as a capture register**

  It is possible to use the valid edge of the TI00/TO0/P31 pin or the TI01/P30 pin as the capture trigger. The valid edges of TI00 and TI01 are specified by setting prescaler mode register 0 (PRM0).

  When CR00 is specified as a capture register and the valid edge of the TI00/TO0/P31 pin is specified as the capture trigger, the situation is as shown in Table 7-2 and if the valid edge of the TI01/P30 pin is specified as the capture trigger, the situation is as shown in Table 7-3.

★ **Table 7-2. TI00/TO0/P31 Pin Valid Edge and Capture/Compare Register Capture Trigger**

ES01	ES00	TI00/TO0/P31 Pin Valid Edge	CR00 Capture Trigger	CR01 Capture Trigger
0	0	Falling edge	Rising edge	Falling edge
0	1	Rising edge	Falling edge	Rising edge
1	0	Setting prohibited	Setting prohibited	Setting prohibited
1	1	Both rising and falling edges	No capture operation	Both rising and falling edges

Table 7-3. TI01/P30 Pin Valid Edge and Capture/Compare Register Capture Trigger

ES11	ES10	TI01/P30 Pin Valid Edge	CR00 Capture Trigger
0	0	Falling edge	Falling edge
0	1	Rising edge	Rising edge
1	0	Setting prohibited	Setting prohibited
1	1	Both rising and falling edges	Both rising and falling edges

CR00 is set by a 16-bit memory manipulation instruction.

$\overline{\text{RESET}}$ input makes CR00 undefined.

★ **Cautions 1. Set CR00 to a value other than 0000H in the clear & start mode entered on match between TM0 and CR00. However, in the free-running mode or in the clear & start mode on a TI00 valid edge, if CR00 is set to 0000H, an interrupt request (INTTM00) is generated after the overflow (FFFFH).**

2. If the value after CR00 is changed is smaller than that of 16-bit timer counter 0 (TM0), TM0 continues counting and overflows, then starts counting again from 0. Therefore, if the value of CR00 after changing is smaller than the value before changing, it is necessary to reset and restart the timer after changing the value of CR00.

3. When the valid edge of TI00 is selected as a capture trigger, the TI00/TO0/P31 pin cannot be used as TO0. Similarly, when this pin is used as TO0, the valid edge of TI00 cannot be used as a capture trigger.

(3) 16-bit timer capture/compare register 01 (CR01)

CR01 is a 16-bit register that has the functions of both a capture register and a compare register. Whether it is used as a capture register or as a compare register is set by bit 2 (CRC02) of 16-bit capture/compare control register 0 (CRC0).

- **When CR01 is used as a compare register**

  The value set in CR01 is constantly compared with the 16-bit timer counter 0 (TM0) count value, and an interrupt request (INTTM01) is generated if they match.

- **When CR01 is used as a capture register**

  It is possible to use the valid edge of the TI00/TO0/P31 pin as the capture trigger. The valid edge of TI00/TO0/P31 is specified by setting prescaler mode register 0 (PRM0). Table 7-2 shows the various settings that result when the valid edge of pin TI00/TO0/P31 is specified as the capture trigger.

CR01 is set with a 16-bit memory manipulation instruction.

$\overline{\text{RESET}}$ input makes CR01 undefined.

★ **Cautions 1. Set CR01 to a value other than 0000H in the clear & start mode entered on match between TM0 and CR01. However, in the free-running mode or in the clear & start mode on a TI01 valid edge, if CR01 is set to 0000H, an interrupt request (INTTM01) is generated after the overflow (FFFFH).**

2. If the value after CR01 is changed is smaller than that of 16-bit timer counter 0 (TM0), TM0 continues counting and overflows, then starts counting again from 0. Therefore, if the value of CR01 after changing is smaller than the value before changing, it is necessary to reset and restart the timer after changing the value of CR01.

7.4 Control Registers of 16-Bit Timer/Event Counter 0

The following five registers are used to control 16-bit timer/event counter 0.

- 16-bit timer mode control register 0 (TMC0)
- Capture/compare control register 0 (CRC0)
- 16-bit timer output control register 0 (TOC0)
- Prescaler mode register 0 (PRM0)
- Port mode register 3 (PM3)

(1) 16-bit timer mode control register 0 (TMC0)

This register sets the 16-bit timer operating mode, 16-bit timer counter 0 (TM0) clear mode, and output timing, and detects an overflow.

TMC0 is set with a 1-bit or 8-bit memory manipulation instruction.

$\overline{\text{RESET}}$ input sets TMC0 to 00H.

Caution 16-bit timer counter 0 (TM0) starts operation at the moment TMC02 and TMC03 are set to values other than 0, 0 (operation stop mode) respectively. To stop operation, be sure to set TMC02 and TMC03 to 0, 0.

★ **Figure 7-2. Format of 16-Bit Timer Mode Control Register 0 (TMC0)**

Address: FF60H After reset: 00H R/W

Symbol	7	6	5	4	3	2	1	0
TMC0	0	0	0	0	TMC03	TMC02	0	OVF0

TMC03	TMC02	Operation mode and clear mode selection	TO0 output timing selection	Interrupt request generation
0	0	Operation stop (TM0 cleared to 0)	No change	Not generated
0	1	Free-running mode	On match between TM0 and CR00 or TM0 and CR01	Generated on match between TM0 and CR00 or between TM0 and CR01
1	0	Clear & start on TI00 valid edge	–	
1	1	Clear & start on match between TM0 and CR00	On match between TM0 and CR00 or TM0 and CR01	

OVF0	16-bit timer counter 0 (TM0) overflow detection
0	Overflow not detected
1	Overflow detected

Cautions 1. For bits other than the OVF0 flag, writing should be performed after timer operation has stopped.

2. The valid edge of the TI00/TO0/P31 pin is specified by setting prescaler mode register 0 (PRM0).

3. When clear & start mode entered on a match between TM0 and CR00 is selected, if the TM0 value changes from FFFFH to 0000H while the set value of CR00 is FFFFH, the OVF0 flag is set to 1.

Remark TO0: 16-bit timer/event counter 0 output pin
TI00: 16-bit timer/event counter 0 input pin
TM0: 16-bit timer counter 0
CR00: 16-bit capture/compare register 00
CR01: 16-bit capture/compare register 01

(2) Capture/compare control register 0 (CRC0)

This register is used to control the operation of 16-bit timer capture/compare registers 00 and 01 (CR00 and CR01).

CRC0 is set with a 1-bit or 8-bit memory manipulation instruction.

$\overline{\text{RESET}}$ input sets CRC0 to 00H.

Figure 7-3. Format of Capture/Compare Control Register 0 (CRC0)

Address: FF62H After reset: 00H R/W

Symbol	7	6	5	4	3	2	1	0
CRC0	0	0	0	0	0	CRC02	CRC01	CRC00

CRC02	CR01 operation mode selection
0	Operates as compare register
1	Operates as capture register

CRC01	CR00 capture trigger selection
0	Captures on valid edge of TI01
1	Captures on inverse phase of valid edge of TI00

CRC00	CR00 operation mode selection
0	Operates as compare register
1	Operates as capture register

Cautions 1. Timer operation must be stopped before setting CRC0.

2. CR00 must not be specified as a capture register when the clear & stop mode entered on a match between TM0 and CR00 is selected by 16-bit timer mode control register 0 (TMC0).

3. Capture is not performed when both the rising and falling edges are selected as the valid edges of TI00.

★ **4. To ensure the reliability of the capture operation, the capture trigger requires a pulse two times longer than the count clock selected by prescaler mode register 0 (PRM0).**

(3) 16-bit timer output control register 0 (TOC0)

This register is used to control the operation of the 16-bit timer/event counter 0 output controller. TOC0 sets/resets R-S type flip-flops (LV0), enables/disables inverting the output, and enables/disables 16-bit timer/event counter 0 timer output.

TOC0 is set with a 1-bit or 8-bit memory manipulation instruction.

$\overline{\text{RESET}}$ input sets TOC0 to 00H.

Figure 7-4 shows the format of TOC0.

★ **Figure 7-4. Format of 16-Bit Timer Output Control Register 0 (TOC0)**

Address: FF63H After reset: 00H R/W

Symbol	7	6	5	4	3	2	1	0
TOC0	0	0	0	TOC04	LVS0	LVR0	TOC01	TOE0

TOC04	Control of timer output F/F on match between CR01 and TM0
0	Disables inverse operation
1	Enables inverse operation

LVS0	LVR0	Setting of 16-bit timer/event counter 0 timer output F/F state
0	0	No change
0	1	Resets timer output F/F to 0
1	0	Sets timer output F/F to 1
1	1	Setting prohibited

TOC01	Control of timer output F/F on match between CR00 and TM0
0	Disables inverse operation
1	Enables inverse operation

TOE0	Control of 16-bit timer/event counter 0 output
0	Disables output (output is fixed to 0)
1	Enables output

Cautions 1. Timer operation must be stopped before setting TOC0.

2. If LVS0 or LVR0 is read after data setting, 0 is read.

(4) Prescaler mode register 0 (PRM0)

This register is used to set the count clock of 16-bit timer counter 0 (TM0) and the valid edge of the TI00 and TI01 inputs.

PRM0 is set with an 8-bit memory manipulation instruction.

$\overline{\text{RESET}}$ input sets PRM0 to 00H.

Figure 7-5. Format of Prescaler Mode Register 0 (PRM0)

Address: FF61H After reset: 00H R/W

Symbol	7	6	5	4	3	2	1	0
PRM0	ES11	ES10	ES01	ES00	0	0	PRM01	PRM00

ES11	ES10	TI01 valid edge selection
0	0	Falling edge
0	1	Rising edge
1	0	Setting prohibited
1	1	Both rising and falling edges

ES01	ES00	TI00 valid edge selection
0	0	Falling edge
0	1	Rising edge
1	0	Setting prohibited
1	1	Both rising and falling edges

PRM01	PRM00	Count clock selection
0	0	f_{XT1} (30.5 μs)
0	1	$f_{XT1}/2$ (61 μs)
1	0	$f_{XT2}/2^4$ (3.26 μs)
1	1	TI00 valid edge[Note]

★ **Note** The external clock requires a pulse two times longer than internal clock ($f_{XT2}/2^2$).

Cautions 1. Timer operation must be stopped before setting PRM0.

2. When the valid edge of TI00 is specified for the count clock, it must not be set as a capture trigger or a trigger of the clear & start operation mode. In this case, the P31/TI00/TO0 pin cannot be used as a timer output (TO0).

3. When the TI00 or TI01 pin is high immediately after system reset, if the valid edge of TI00 or TI01 is specified as the rising edge or both rising and falling edges and the operation of 16-bit timer/event counter 0 is enabled, the rising edge will be detected immediately after these settings. Therefore, be careful in cases when the TI00 or TI01 pin is pulled up. No rising edge will be detected, however, when the operation of TM0 is enabled again after being stopped.

Remarks 1. f_{XT1}: Subsystem clock 1 oscillation frequency, f_{XT2}: Subsystem clock 2 oscillation frequency.

2. TI00 and TI01: 16-bit timer/event counter 0 input pins

3. Figures in parentheses apply to operation with f_{XT1} = 32.768 kHz, f_{XT2} = 4.91 MHz.

★ **(5) Port mode register 3 (PM3)**

This register is used to set the input/output mode of port 3 in 1-bit units.

When using the P31/TO0/TI00 pin as a timer output, set PM31 to the output mode and set the output latch of P31 to 0. When using the P31/TO0/TI00 pin as a timer input, set PM31 to the input mode.

PM3 is set with a 1-bit or 8-bit memory manipulation instruction.

$\overline{\text{RESET}}$ input sets PM3 to FFH.

Figure 7-6. Format of Port Mode Register 3 (PM3)

Address: FF23H After reset: FFH R/W

Symbol	7	6	5	4	3	2	1	0
PM3	PM37	PM36	PM35	PM34	PM33	PM32	PM31	PM30

PM3n	P3n pin input/output mode selection (n = 0 to 7)
0	Output mode (output buffer on)
1	Input mode (output buffer off)

7.5 Operations of 16-Bit Timer/Event Counter 0

7.5.1 Interval timer operation

Setting 16-bit timer mode control register 0 (TMC0) and capture/compare control register 0 (CRC0) as shown in Figure 7-7 allows operation as an interval timer. Interrupt requests are generated repeatedly using the count value set in advance to 16-bit capture/compare register 00 (CR00) as the interval.

When the count value of 16-bit timer counter 0 (TM0) matches the value set to CR00, counting continues, with the TM0 value cleared to 0, and an interrupt request signal (INTTM00) is generated.

The count clock of TM0 can be selected with bits 0 and 1 (PRM00 and PRM01) of prescaler mode register 0 (PRM0).

For the operation to be performed when the value of the compare register is changed during timer count operation, refer to **7.6 (3) Operation after compare register change during timer count operation**.

Figure 7-7. Control Register Settings for Interval Timer Operation

★ **(a) 16-bit timer mode control register 0 (TMC0)**

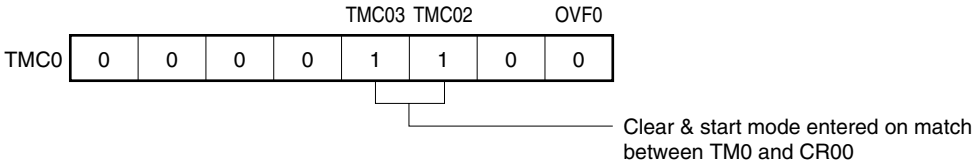

(b) Capture/compare control register 0 (CRC0)

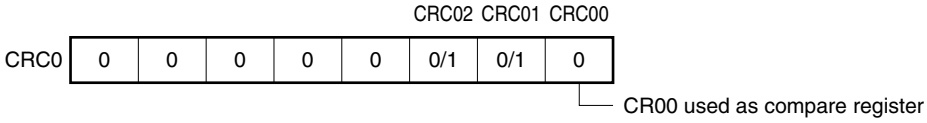

Remark 0/1: Setting 0 or 1 allows another function to be used simultaneously with the interval timer. See **Figures 7-2** and **7-3** for details.

Figure 7-8. Configuration Diagram for Interval Timer

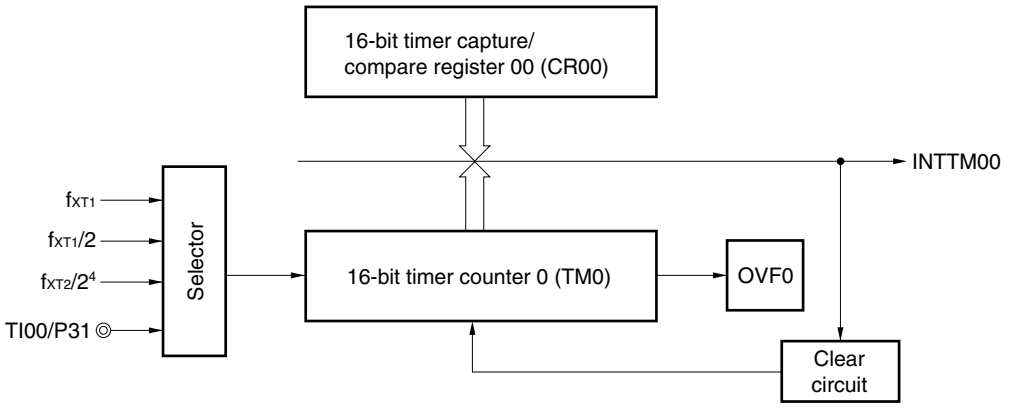

Figure 7-9. Interval Timer Operation Timing

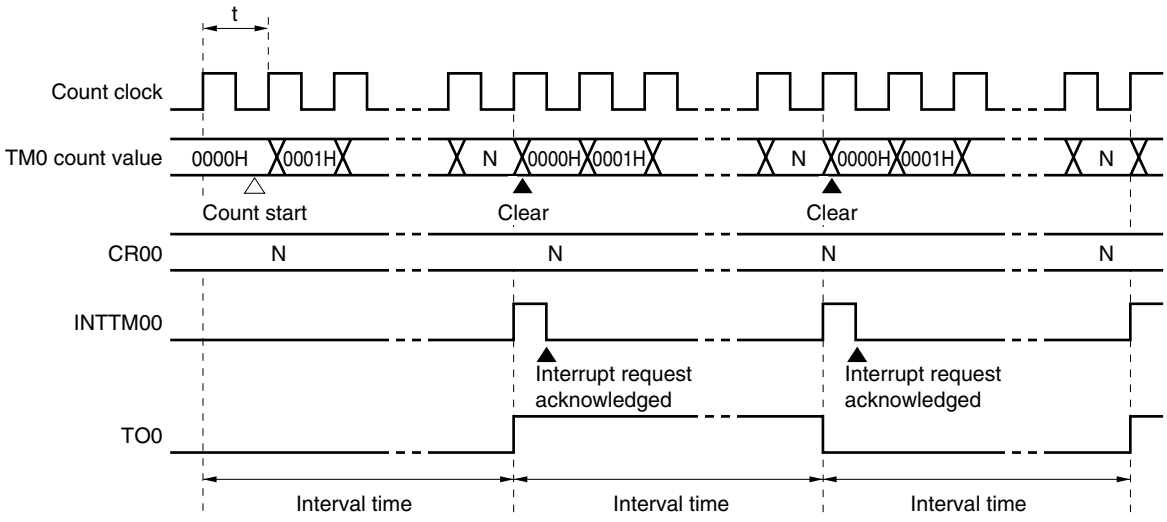

Remark Interval time = (N + 1) × t

N = 0001H to FFFFH

7.5.2 PPG output operation

Setting 16-bit timer mode control register 0 (TMC0) and capture/compare control register 0 (CRC0) as shown in Figure 7-10 allows operation as a programmable pulse generator (PPG) output.

A PPG output pulse is output from the TO0/TI00/P31 pin in a rectangular waveform, using the count value preset in 16-bit timer capture/compare register 00 (CR00) as the cycle and using the count value preset in 16-bit timer capture/compare register 01 (CR01) as the pulse width.

Figure 7-10. Control Register Settings for PPG Output Operation

★ **(a) 16-bit timer mode control register 0 (TMC0)**

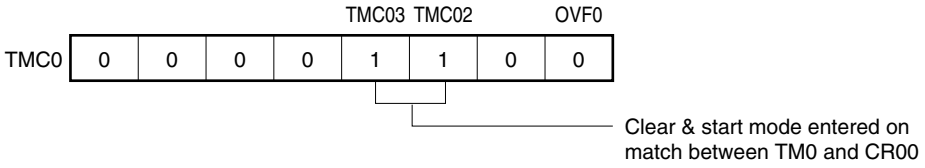

(b) Capture/compare control register 0 (CRC0)

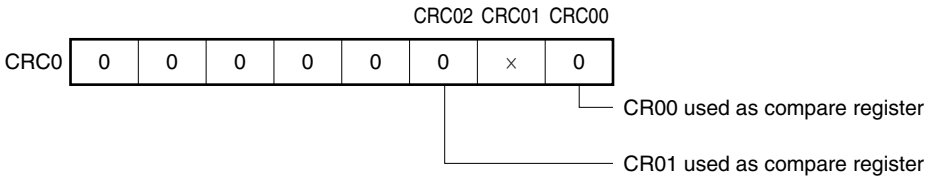

★ **(c) 16-bit timer output control register 0 (TOC0)**

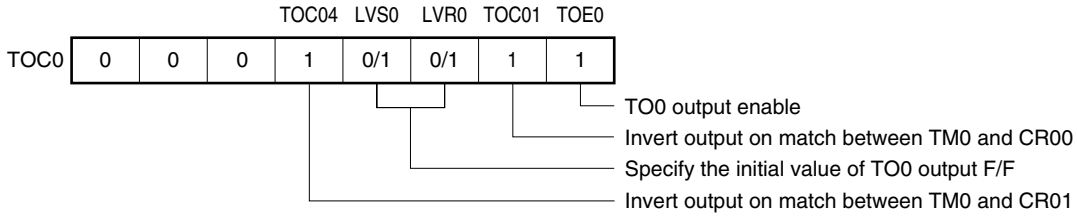

Cautions 1. When setting CR00 and CR01, be sure to satisfy the following expression.
0000H < CR01 < CR00 ≤ FFFFH

2. The cycle of the pulse generated by PPG output is "CR00 set value + 1", and the duty is (CR01 set value + 1)/(CR00 set value + 1).

Remark ×: don't care

★ **Figure 7-11. Configuration Diagram for PPG Output**

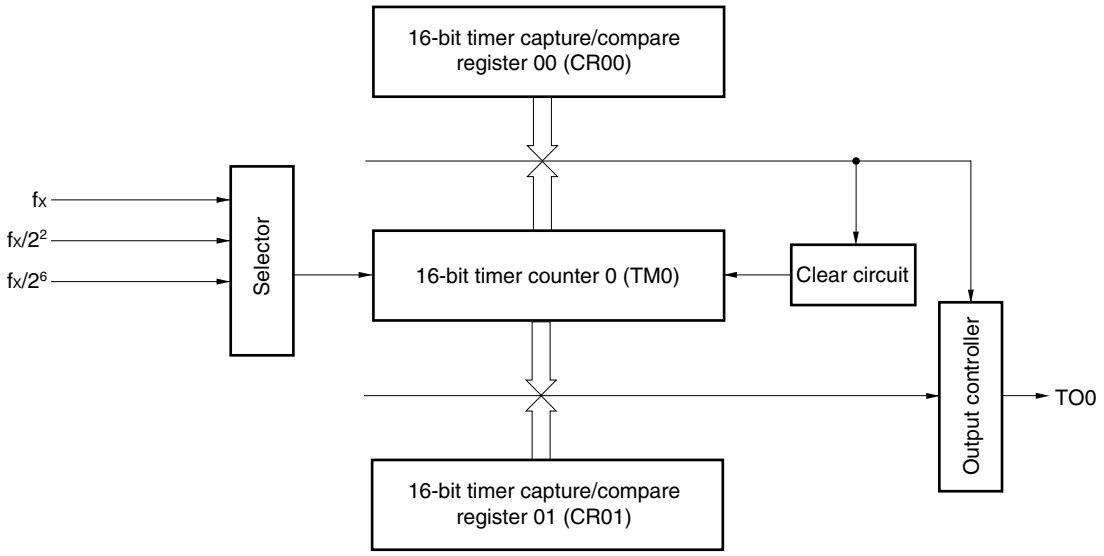

★ **Figure 7-12. PPG Output Operation Timing**

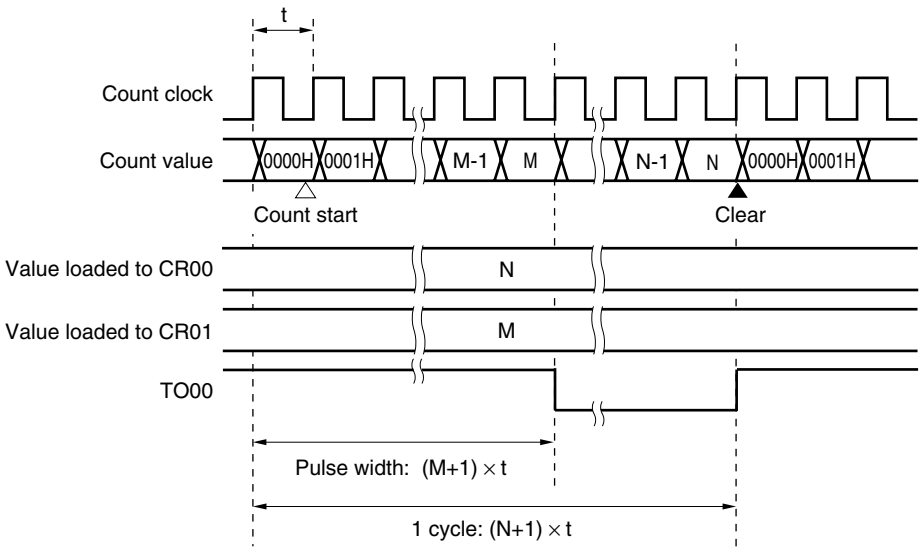

Remark 0000H < M < N ≤ FFFFH

7.5.3 Pulse-width measurement operations

It is possible to measure the pulse width of the signal input to the TI00/TO0/P31 pin and TI01/P30 pin using 16-bit timer counter 0 (TM0).

There are two measurement methods: measuring with TM0 used in free-running mode, and measuring by restarting the timer in synchronization with the edge of the signal input to the TI00/TO0/P31 pin.

(1) Pulse width measurement with free-running counter and one capture register

When 16-bit timer counter 0 (TM0) is operated in free-running mode (see **Figure 7-13**) and the edge specified by prescaler mode register 0 (PRM0) is input to the TI00/TO0/P31 pin, the value of TM0 is taken into 16-bit timer capture/compare register 01 (CR01) and an external interrupt request signal (INTTM01) is set.

The valid edge of the TI00/TO0/P31 pin is set with bits 6 and 7 (ES10 and ES11) of PRM0. The rising edge, falling edge, or both edges can be selected as the valid edge.

Sampling is performed at the count clock interval selected using PRM0, and a capture operation is only performed when the valid level of the TI00/TO0/P31 pin is detected twice, thus eliminating noise with a short pulse width.

Figure 7-13. Control Register Settings for Pulse-Width Measurement with Free-Running Counter and One Capture Register

★ **(a) 16-bit timer mode control register 0 (TMC0)**

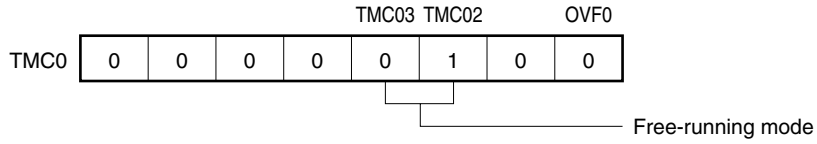

(b) Capture/compare control register 0 (CRC0)

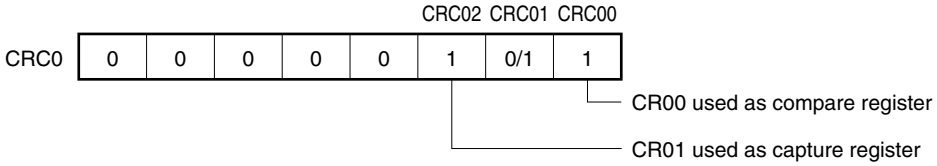

Remark 0/1: Setting 0 or 1 allows another function to be used simultaneously with pulse-width measurement. See **Figures 7-2** and **7-3** for details.

Figure 7-14. Configuration Diagram for Pulse-Width Measurement by Free-Running Counter

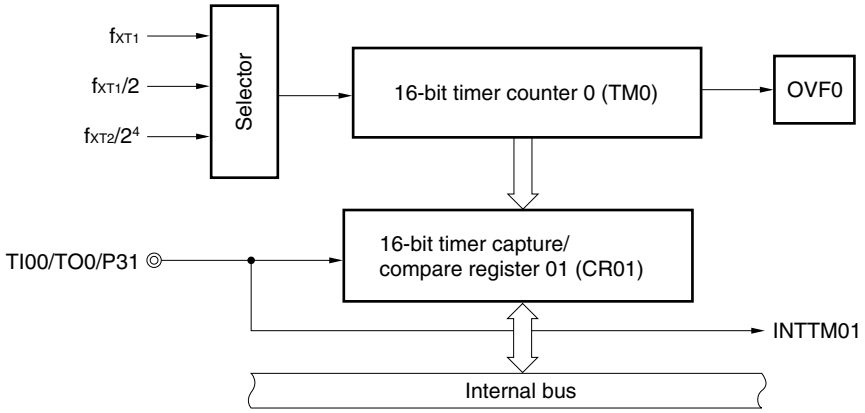

★ **Figure 7-15. Timing of Pulse-Width Measurement Operation with Free-Running Counter and One Capture Register (with Both Edges Specified)**

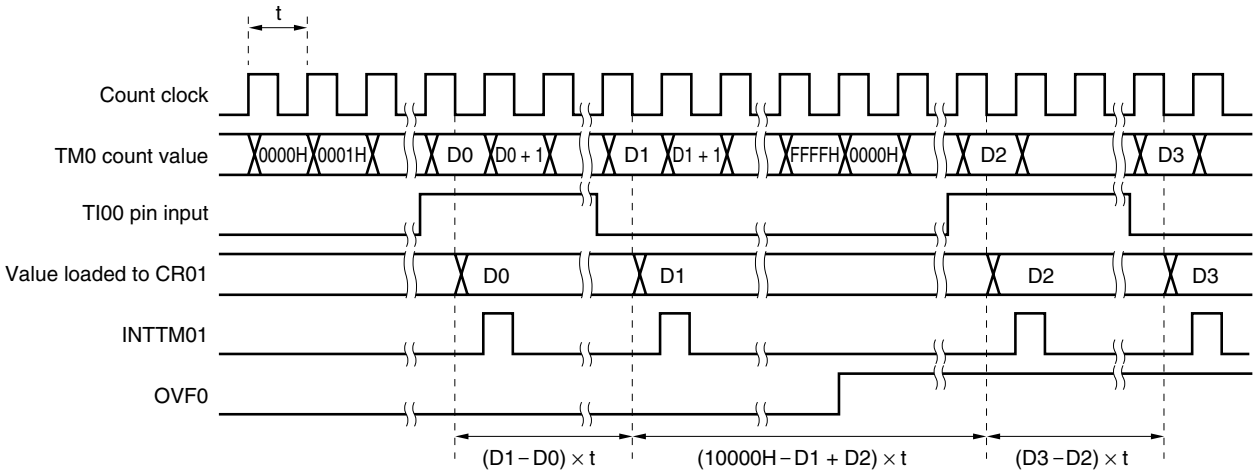

(2) Measurement of two pulse widths with free-running counter

When 16-bit timer counter 0 (TM0) is operated in free-running mode (refer to **Figure 7-16**), it is possible to simultaneously measure the pulse widths of the two signals input to the TI00/TO0/P31 and the TI01/P30 pins.

When the edge specified by bits 4 and 5 (ES00 and ES001) of prescaler mode register 0 (PRM0) is input to the TI00/TO0/P31 pin, the value of TM0 is taken into 16-bit timer capture/compare register 01 (CR01) and an external interrupt request signal (INTTM01) is set.

Also, when the edge specified by bits 6 and 7 (ES10 and ES11) of PRM0 is input to the TI01/P30 pin, the value of TM0 is taken into 16-bit timer capture/compare register 00 (CR00) and an external interrupt request signal (INTTM00) is set.

The valid edges of the TI00/TO0/P31 and TI01/P30 pins are specified by bits 4 and 5 (ES00 and ES01) and bits 6 and 7 (ES10 and ES11) of PRM0, respectively. It is possible to select the rising edge, falling edge, or both edges as the valid edge.

Sampling is performed at the count clock interval selected using PRM0, and a capture operation is only performed when the valid level of the TI00/TO0/P31 pin or TI01/P30 pin is detected twice, thus eliminating noise with a short pulse width.

Figure 7-16. Control Register Settings for Two-Pulse-Width Measurement with Free-Running Counter

★ **(a) 16-bit timer mode control register 0 (TMC0)**

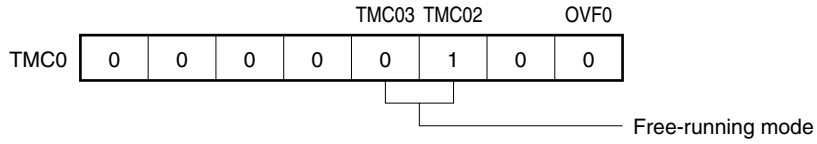

(b) Capture/compare control register 0 (CRC0)

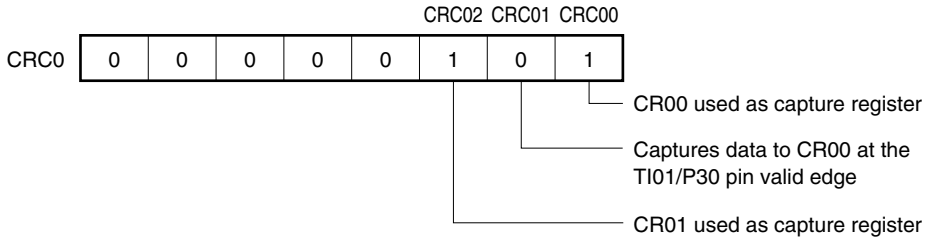

Remark 0/1: Setting 0 or 1 allows another function to be used simultaneously with pulse-width measurement. See **Figures 7-2** and **7-3** for details.

- **Capture operation mode (free-running mode)**

  The capture register operation when a capture trigger is input is shown below.

★ **Figure 7-17. CR01 Capture Operation with Rising Edge Specified**

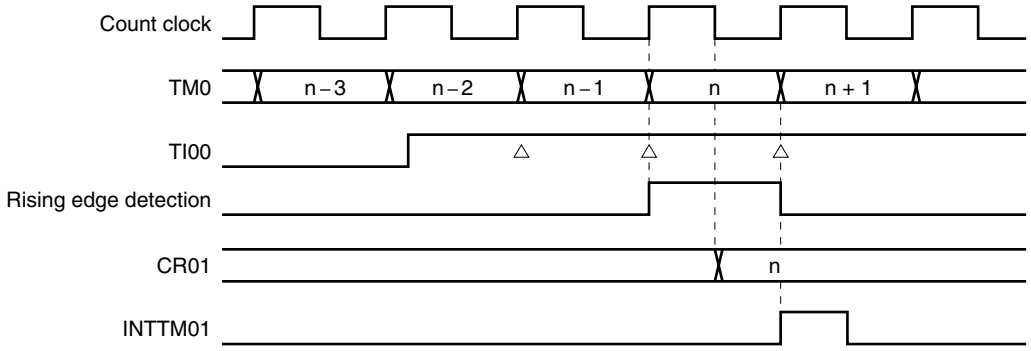

★ **Figure 7-18. Timing of Two-Pulse-Width Measurement Operation with Free-Running Counter (with Both Edges Specified)**

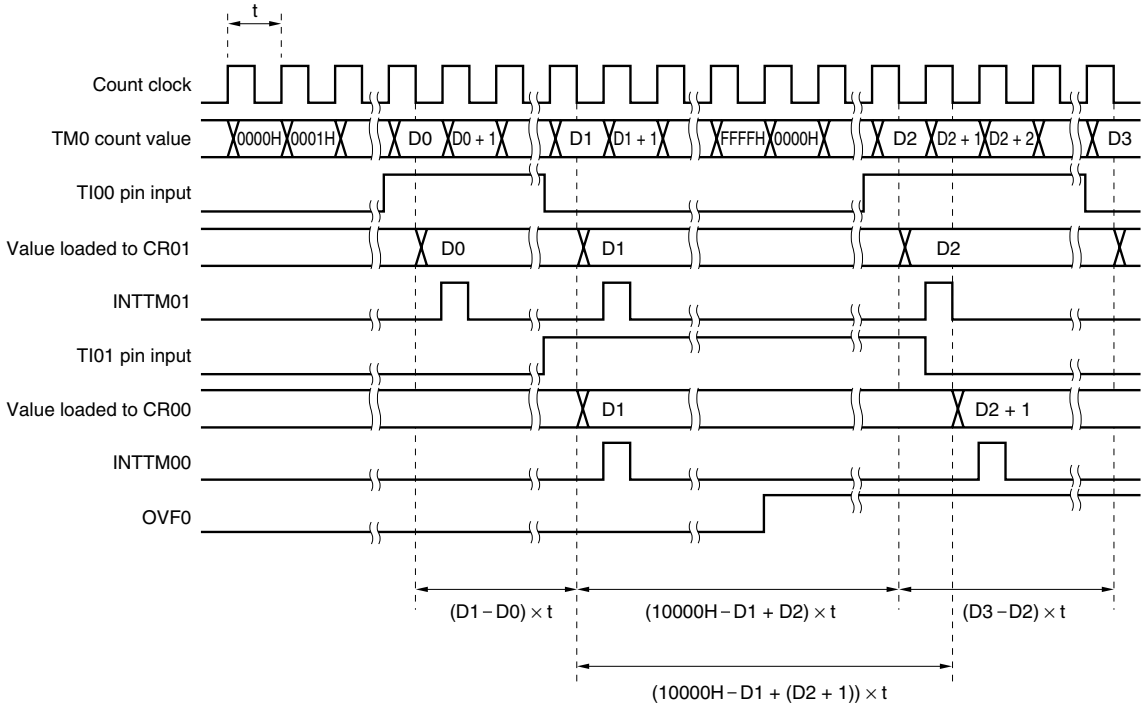

(3) Pulse width measurement with free-running counter and two capture registers

When 16-bit timer counter 0 (TM0) is operated in free-running mode (refer to **Figure 7-19**), it is possible to measure the pulse width of the signal input to TI00/TO0/P31 pin.

When the edge specified by bits 4 and 5 (ES00 and ES01) of prescaler mode register 0 (PRM0) is input to the TI00/TO0/P31 pin, the value of TM0 is taken into 16-bit timer capture/compare register 01 (CR01) and an external interrupt request signal (INTTM01) is set.

Also, on input of the inverse edge to that of the capture operation into CR01, the value of TM0 is taken into 16-bit timer capture/compare register 00 (CR00).

The valid edge of the TI00/TO0/P31 pin is specified by bits 4 and 5 (ES00 and ES01) of PRM0, and it is possible to select the rising edge or falling edge.

Sampling is performed at the count clock interval selected using PRM0, and a capture operation is only performed when the valid level of the TI00/TO0/P31 pin is detected twice, thus eliminating noise with a short pulse width.

Caution When both the rising and falling edges are selected as the valid edges of the TI00/TO0/P31 pin, capture/compare register 00 (CR00) cannot perform the capture operation.

Figure 7-19. Control Register Settings for Pulse-Width Measurement with Free-Running Counter and Two Capture Registers

★ **(a) 16-bit timer mode control register 0 (TMC0)**

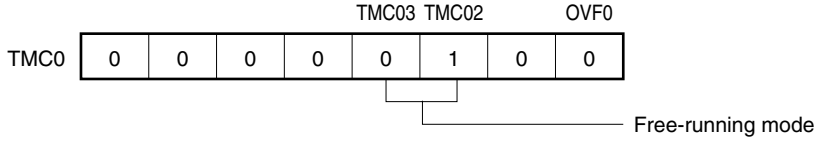

(b) Capture/compare control register 0 (CRC0)

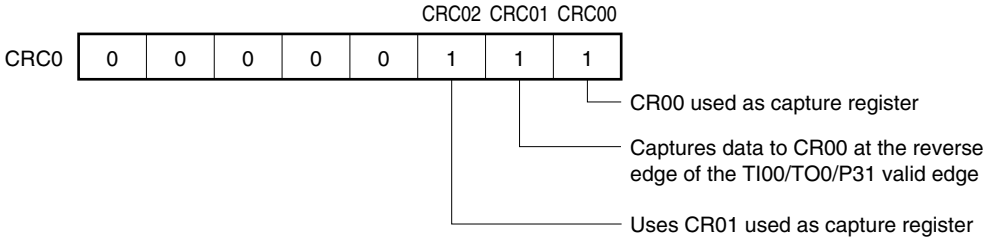

Remark 0/1: Setting 0 or 1 allows another function to be used simultaneously with pulse-width measurement. See the descriptions of the respective control registers for details.

★ **Figure 7-20. Timing of Pulse-Width Measurement Operation with Free-Running Counter and Two Capture Registers (with Rising Edge Specified)**

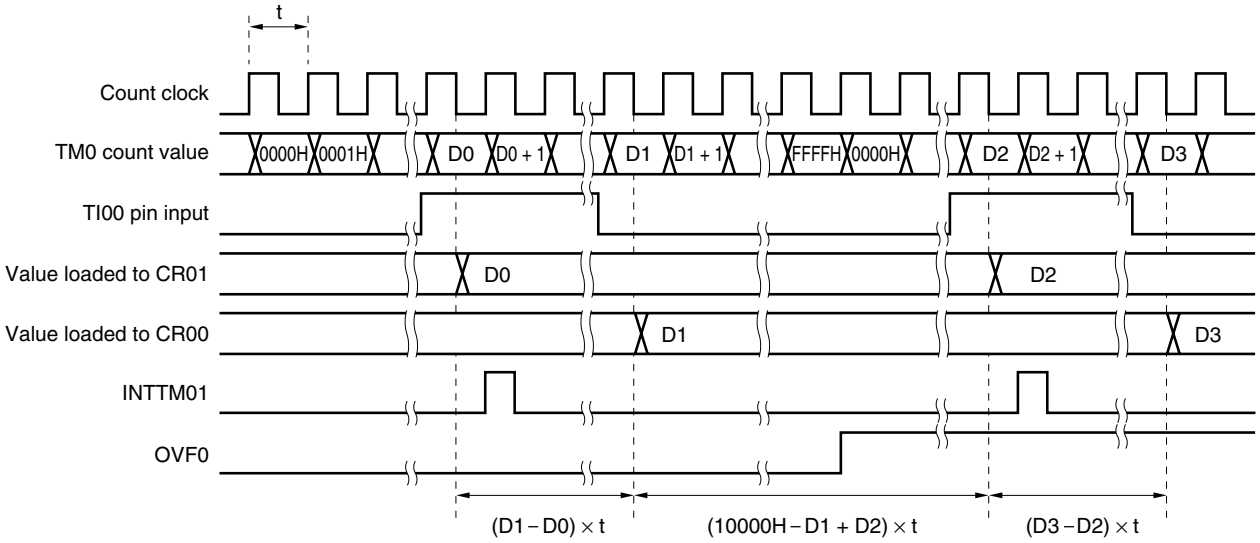

(4) Pulse width measurement by means of restart

When input of a valid edge to the TI00/TO0/P31 pin is detected, the count value of 16-bit timer counter 0 (TM0) is taken into 16-bit timer capture/compare register 01 (CR01), and then the pulse width of the signal input to the TI00/TO0/P31 pin is measured by clearing TM0 and restarting the count (refer to **Figure 7-21**).

The valid edge of the TI00/TO0/P31 pin is specified by bits 4 and 5 (ES00 and ES01) of PRM0, and it is possible to select the rising edge or falling edge.

Sampling is performed at the count clock interval selected using PRM0, and a capture operation is only performed when the valid level of the TI00/TO0/P31 pin is detected twice, thus eliminating noise with a short pulse width.

Caution When both the rising and falling edges are selected as the valid edges of the TI00/TO0/P31 pin, 16-bit timer capture/compare register 00 (CR00) cannot perform the capture operation.

Figure 7-21. Control Register Settings for Pulse-Width Measurement by Means of Restart

★ **(a) 16-bit timer mode control register 0 (TMC0)**

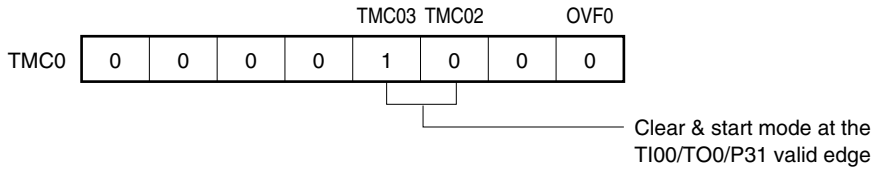

(b) Capture/compare control register 0 (CRC0)

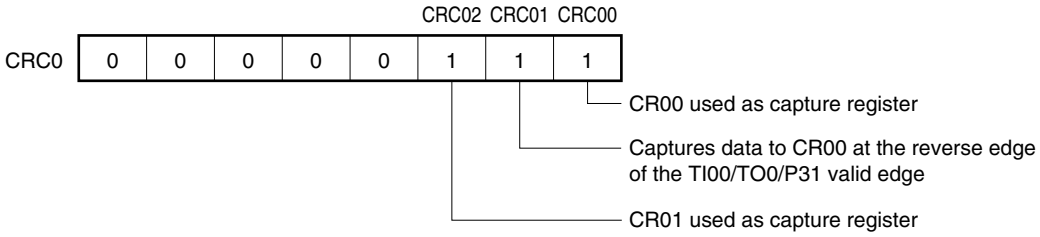

Remark 0/1: Setting 0 or 1 allows another function to be used simultaneously with pulse-width measurement. See **Figures 7-2** and **7-3** for details.

★ **Figure 7-22. Timing of Pulse-Width Measurement Operation by Means of Restart (with Rising Edge Specified)**

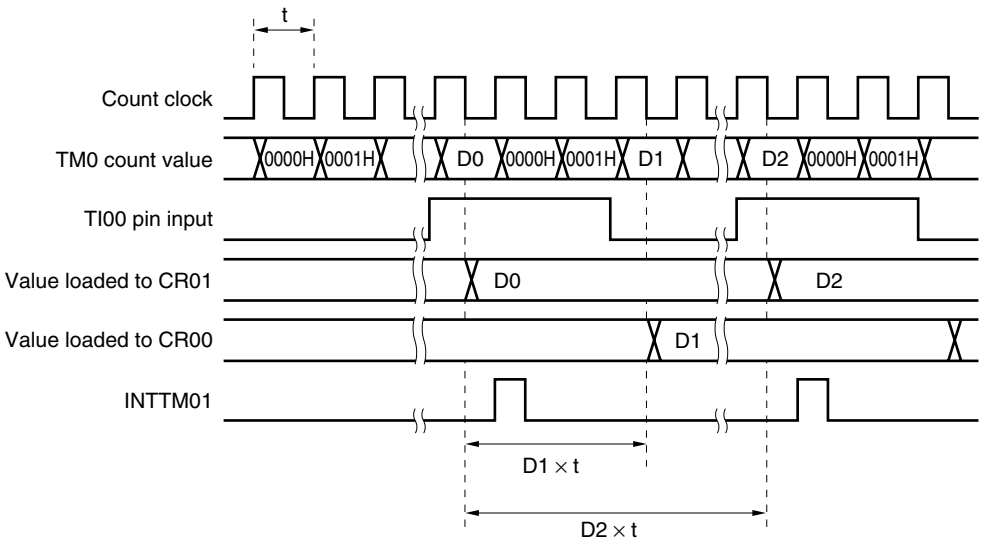

7.5.4 External event counter operation

The external event counter counts the number of external clock pulses to be input to the TI00/TO0/P31 pin by 16-bit timer counter 0 (TM0).

TM0 is incremented each time the valid edge specified by prescaler mode register 0 (PRM0) is input.

When the TM0 counted value matches the 16-bit timer capture/compare register 00 (CR00) value, TM0 is cleared to 0 and an interrupt request signal (INTTM00) is generated.

CR00 should be set to a value other than 0000H (one-pulse count operation is not possible).

The valid edge of the TI00/TO0/P31 pin is specified by bits 4 and 5 (ES00 and ES01) of PRM0, and the rising edge, falling edge, or both edges can be selected.

Sampling is performed at the internal clock ($f_{XT2}/2^2$), and a capture operation is only performed when the valid level of the TI00/TO0/P31 pin is detected twice, thus eliminating noise with a short pulse width.

Caution When TM0 is used as an external event counter, the P31/TI00/TO0 pin cannot be used as a timer output (TO0).

Figure 7-23. Control Register Settings in External Event Counter Mode

★ **(a) 16-bit timer mode control register 0 (TMC0)**

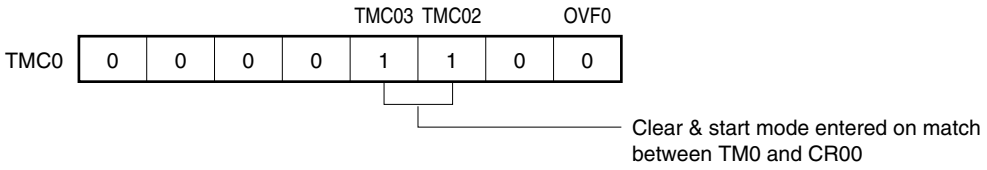

(b) Capture/compare control register 0 (CRC0)

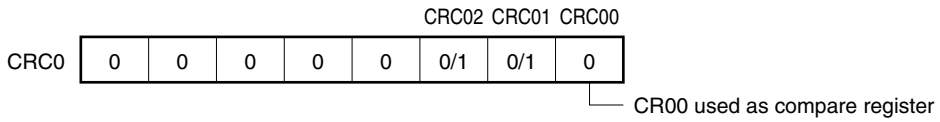

Remark 0/1: Setting 0 or 1 allows another function to be used simultaneously with the external event counter. See **Figures 7-2** and **7-3** for details.

Figure 7-24. Configuration Diagram for External Event Counter

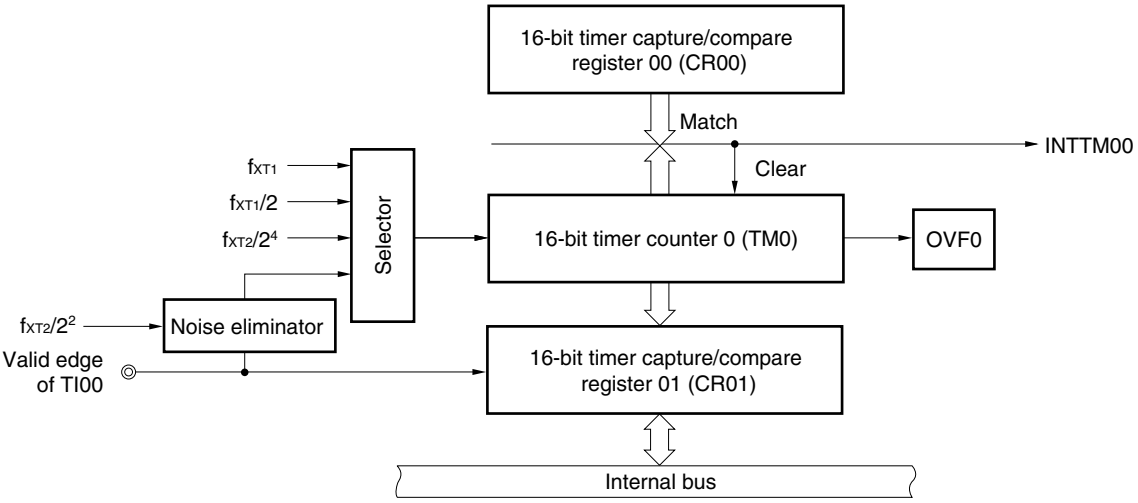

Figure 7-25. External Event Counter Operation Timing (with Rising Edge Specified)

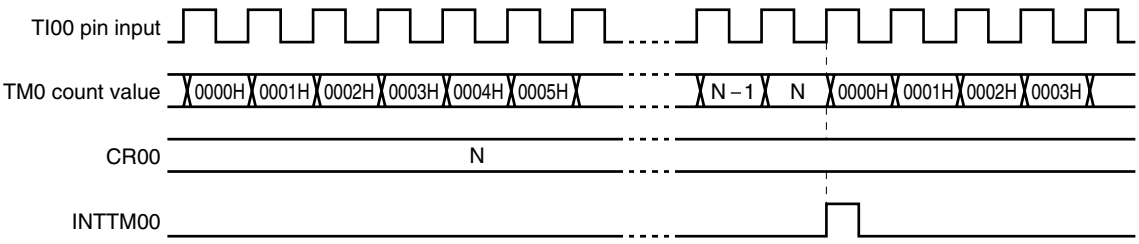

Caution When reading the external event counter count value, TM0 should be read.

7.5.5 Square-wave output operation

TM0 can output a square wave with any selected frequency. This square wave is output using the count value preset in 16-bit timer capture/compare register 00 (CR00) as an interval.

The TO0/P31 pin output status is reversed at the intervals of the count value preset in CR00 by setting bits 0 (TOE0) and 1 (TOC01) of 16-bit timer output control register 0 (TOC0) to 1. This enables a square wave with any selected frequency to be output.

Figure 7-26. Control Register Settings in Square-Wave Output Mode

★ **(a) 16-bit timer mode control register 0 (TMC0)**

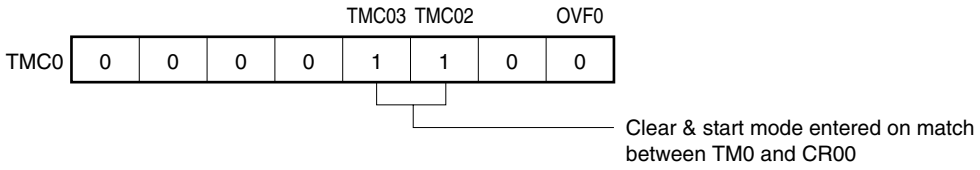

(b) Capture/compare control register 0 (CRC0)

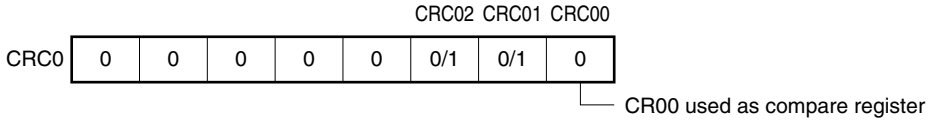

★ **(c) 16-bit timer output control register 0 (TOC0)**

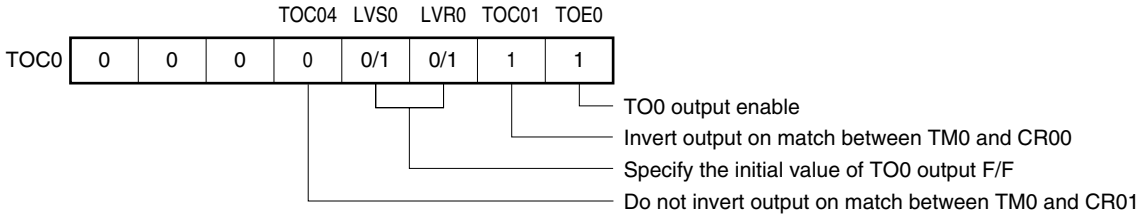

Remark 0/1: Setting 0 or 1 allows another function to be used simultaneously with square-wave output. See **Figures 7-2**, **7-3**, and **7-4** for details.

Figure 7-27. Timing of Square-Wave Output Operation

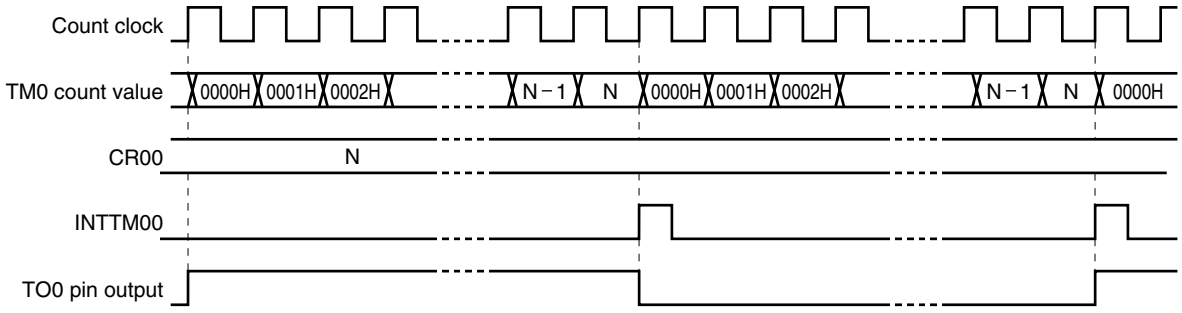

7.6 Operating Cautions for 16-Bit Timer/Event Counter 0

(1) Timer start errors

An error of up to one clock may occur in the time required for a match signal to be generated after timer start. This is because 16-bit timer counter 0 (TM0) starts operation asynchronously to the count pulse.

Figure 7-28. Start Timing of 16-Bit Timer Counter 0

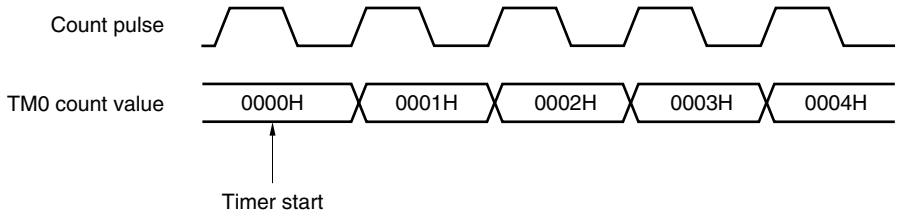

★ **(2) 16-bit compare register setting (in the clear & start mode entered on match between TM0 and CR00)**

Set 16-bit timer capture/compare registers 00 and 01 (CR00 and CR01) to a value other than 0000H.

(3) Operation after compare register change during timer count operation

If the value after the change of 16-bit timer capture/compare register 00 (CR00) is smaller than that of 16-bit timer counter 0 (TM0), TM0 continues counting, overflows, and then restarts counting from 0. Thus, if the value (M) after the CR00 change is smaller than that (N) before change, it is necessary to reset and restart the timer after changing CR00.

Figure 7-29. Timing After Change of Compare Register During Timer Count Operation

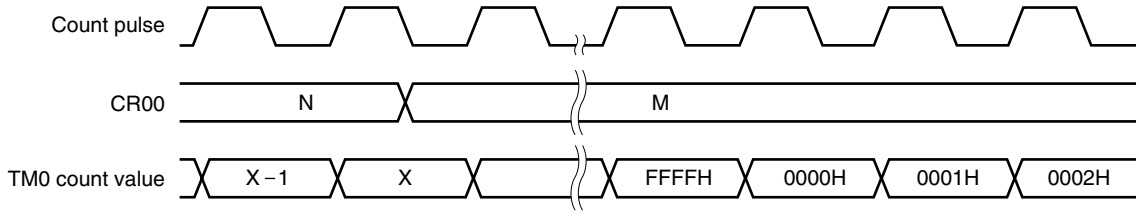

Remark N > X > M

(4) Capture register data retention timing

If the valid edge of the TI00/TO0/P31 pin is input during 16-bit timer capture/compare register 01 (CR01) read, CR01 performs a capture operation, but the capture value at this time is not guaranteed. The interrupt request signal (TMIF01) is, however, set upon detection of the valid edge.

★ **Figure 7-30. Capture Register Data Retention Timing**

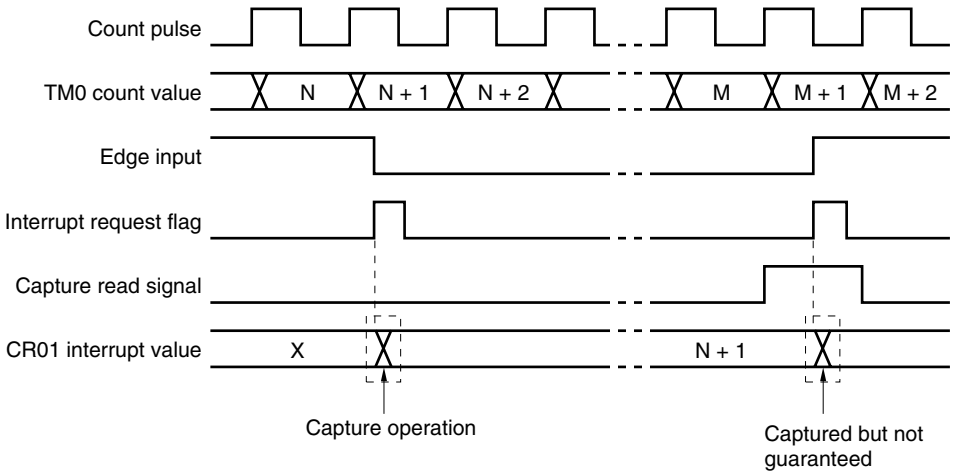

(5) Valid edge setting

Set the valid edge of the TI00/TO0/P31 pin after the timer operation is stopped by setting bits 2 and 3 (TMC02 and TMC03) of 16-bit timer mode control register 0 (TMC0) to 0, 0, respectively. The valid edge of the TI00/TO0/P31 pin is specified by setting bits 4 and 5 (ES00 and ES01) of PRM0.

(6) Operation of OVF0 flag

<1> The OVF0 (bit 0 of TMC0) flag is set to 1 in the following case.

★ Either the clear & start mode entered on a match between TM0 and CR00, the clear & start mode triggered by the valid edge of TI00, or the free-running mode is selected.

↓

CR00 is set to FFFFH.

↓

When TM0 has counted up from FFFFH to 0000H.

★ **Figure 7-31. Operation Timing of OVF0 Flag**

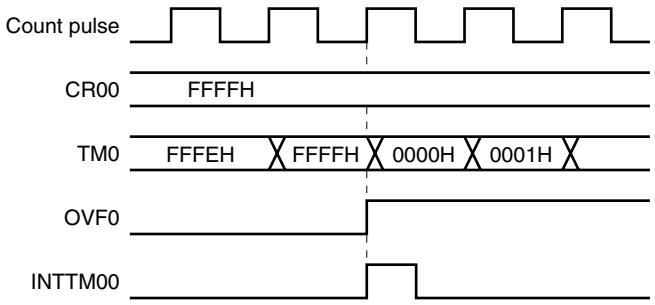

<2> After TM0 overflows, it is reset and the clear instruction becomes invalid even if the OVF0 flag is cleared before the next count clock (before TM0 becomes 0001H).

(7) Conflicting operations

<1> Conflict between the read period of a 16-bit timer capture/compare register (CR00 or CR01) and capture trigger input (CR00 or CR01 used as a capture register)
The capture trigger input has priority. The data read from CR00 and CR01 is not defined.

<2> Conflict between the write period of a 16-bit timer capture/compare register (CR00 or CR01) and the match timing of CR00 or CR01 and 16-bit timer counter 0 (TM0) (CR00 or CR01 used as a compare register)
The match judgement is not performed normally. Do not write any data to CR00 and CR01 near the match timing.

(8) Timer operation

<1> Even if 16-bit timer counter 0 (TM0) is read, the value is not captured in 16-bit timer capture/compare register 01 (CR01).

<2> Regardless of the operation mode of the CPU, the noise of the external interrupt request input is not eliminated while the timer is stopped.

(9) Capture operation

<1> When the valid edge of TI00 is specified for the count clock, the capture register that specified TI00 as the trigger cannot perform the capture operation normally.

★ <2> A capture operation is not performed when both the rising and falling edges are specified for the TI00 valid edge.

★ <3> In order to ensure the capture operation, a pulse longer than two clocks of the count clock specified by prescaler mode register 0 (PRM0) is required for a capture trigger.

★ <4> Capture operations start at the falling edge of the count clock. However, interrupt request input (INTTM0n) starts at the rising edge of the count clock.

Remark n = 0, 1

(10) Compare operation

★ <1> If values are written to 16-bit capture/compare registers 00 and 01 (CR00, CR01) at the timing when the set values of CR00 and CR01 and the count value of 16-bit timer counter 0 (TM0) match generating INTTM0n, INTTM0n may not be generated. Therefore, do not write values to CR00 and CR01 repeatedly even if the values are the same.

Remark n = 0, 1

<2> CR00/CR01 set in the compare mode cannot perform a capture operation even if the capture trigger is input.

(11) Edge detection

<1> When the TI00 pin or the TI01 pin is high level immediately after system reset, and if the rising edge or both edges are specified as the valid edge of the TI00 pin or the TI01 pin, then the rising edge is detected immediately after operation of 16-bit timer counter 0 (TM0) is enabled. Be careful when the TI00 pin or the TI01 pin is pulled up. When operation is enabled again after being stopped, the rising edge cannot be detected.

★ <2> A different sampling clock for noise elimination is used when the TI00 pin valid edge is used for the count clock and when it is used for capture trigger. In the former case, a count clock of $f_{XT2}/2^2$ is used, and in the latter case the count clock specified by prescaler mode register 0 (PRM0) is used for sampling. A capture operation is only performed when sampling is performed using the above described sampling clock and when a valid level is detected twice, thus eliminating noise with a short pulse width.

Remark n = 0, 1

CHAPTER 8 16-BIT TIMER/EVENT COUNTER 2

8.1 Outline of 16-Bit Timer/Event Counter 2

16-bit timer/event counter 2 can be used as an interval timer and external event counter.

8.2 Functions of 16-Bit Timer/Event Counter 2

16-bit timer/event counter 2 has the following functions.

- Interval timer
- External event counter

(1) Interval timer

16-bit timer/event counter 2 generates an interrupt request at a preset optional interval.

(2) External event counter

16-bit timer/event counter 2 can measure the number of pulses of an externally input signal. The number of pulses of any time can be measured by using the 8-bit timer 82 interrupt request signal (INTTM82).

8.3 Configuration of 16-Bit Timer/Event Counter 2

16-bit timer/event counter 2 consists of the following hardware.

Table 8-1. Configuration of 16-Bit Timer/Event Counter 2

Item	Configuration
Timer counter	16 bits × 1 (TM2)
Register	Compare register: 16 bits × 1 (CR2)
Control registers	Timer mode control register 2 (TMC2) Timer input control register 2 (TICT2)

Figure 8-1 shows the block diagram of 16-bit timer/event counter 2.

Figure 8-1. Block Diagram of 16-Bit Timer/Event Counter 2

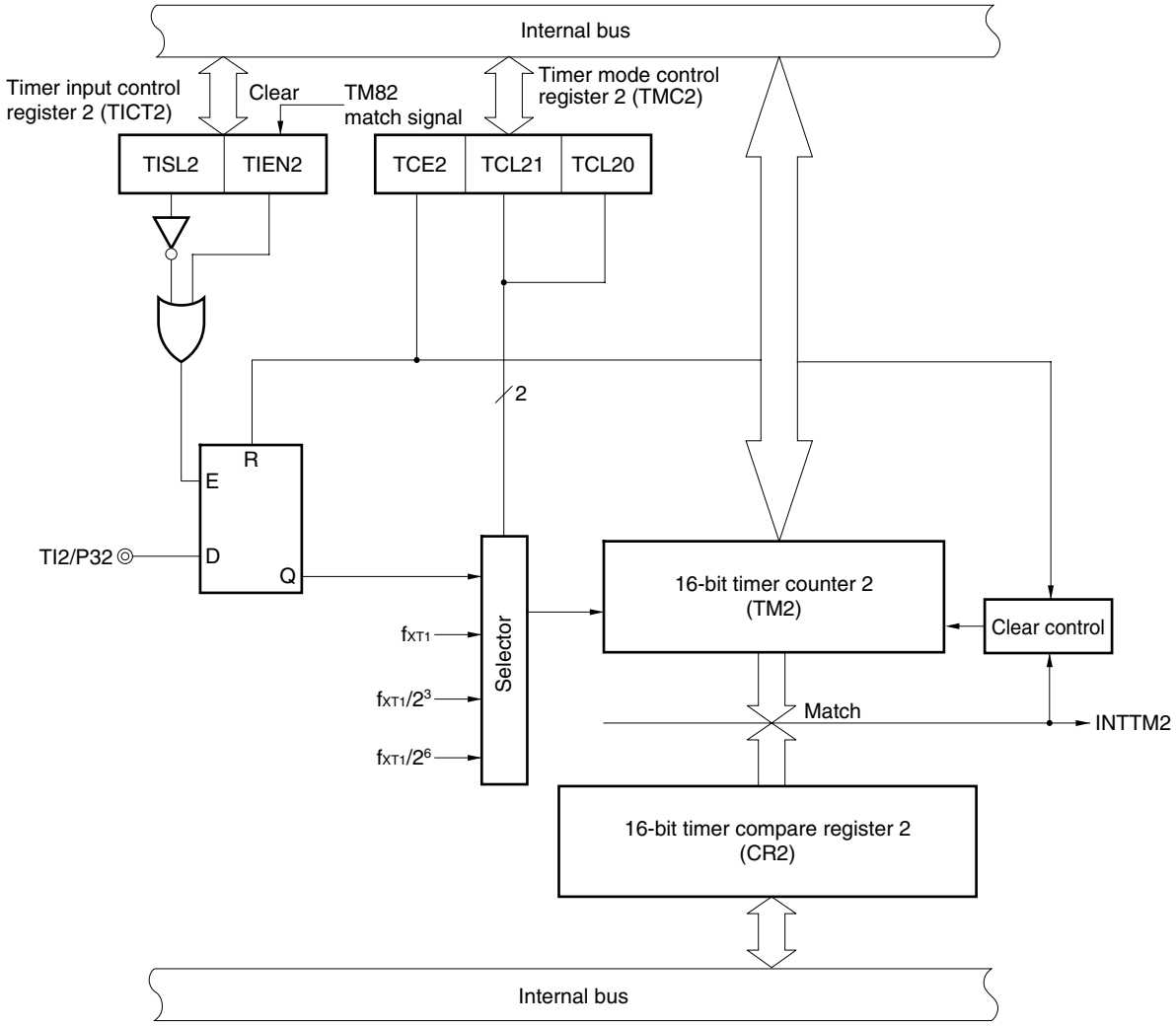

(1) 16-bit timer compare register 2 (CR2)

CR2 is a 16-bit register. The value set in CR2 is constantly compared with the 16-bit timer counter 2 (TM2) count value, and an interrupt request is generated if they match.

The value of CR2 can be set between 0000H and FFFFH.

Caution Do not rewrite the CR2 value during a timer count operation.

(2) 16-bit timer counter 2 (TM2)

TM2 is a 16-bit register that counts count pulses.

★ $\overline{\text{RESET}}$ input makes TM2 undefined.

8.4 Control Registers of 16-Bit Timer/Event Counter 2

The following two registers are used to control 16-bit timer/event counter 2.

- Timer mode control register 2 (TMC2)
- Timer input control register 2 (TICT2)

(1) Timer mode control register 2 (TMC2)

This register is used to enable/disable 16-bit timer counter 2 (TM2) operation and to set the count clock.

TMC2 is set with a 1-bit or 8-bit memory manipulation instruction.

$\overline{\text{RESET}}$ input sets TMC2 to 00H.

Caution Do not rewrite the CR2 value during a timer count operation.

Figure 8-2. Format of Timer Mode Control Register 2 (TMC2)

Address: FF66H After reset: 00H R/W

Symbol	7	6	5	4	3	2	1	0
TMC2	TCE2	0	0	0	0	0	TCL21	TCL20

TCE2	TM2 count operation control
0	Stops operation (TM2 is cleared to 0)
1	Enables operation

TCL21	TCL20	TM2 count clock selection
0	0	TI2 rising edge
0	1	f_{XT1} (30.5 μs)
1	0	$f_{XT1}/2^3$ (244 μs)
1	1	$f_{XT1}/2^6$ (1.95 ms)

Cautions 1. Do not rewrite CR2, TCL21, and TCL20 during a timer count operation.

2. Bits 2 to 6 must be set to 0.

Remark Figures in parentheses apply to operation with f_{XT1} = 32.768 kHz (f_{XT1}: Subsystem clock 1 oscillation frequency).

(2) Timer input control register 2 (TICT2)

This register is used to enable/disable input of an external input clock during an external event counter operation.

TICT2 is set with a 1-bit or 8-bit memory manipulation instruction.

$\overline{\text{RESET}}$ input sets TICT2 to 00H.

Figure 8-3. Format of Timer Input Control Register 2 (TICT2)

Address: FF67H After reset: 00H R/W

Symbol	7	6	5	4	3	2	1	0
TICT2	0	0	0	0	0	0	TISL2	TIEN2

TISL2	External input event clock input control enable flag
0	Disables input control (external event input is always possible)
1	Enables input control (TIEN2 flag can be used for input control)

TIEN2	External input event clock input control flag (valid when TISL2 = 1)
0	Disables input of external input event clock
1	Enables input of external input event clock

Cautions 1. Do not set/reset TISL2 while TIEN2 is set to 1.

2. Setting TIEN2 to 1 must be performed after TISL2 is set to 1.

Remark Setting INTTM82 to 1 clears TIEN2 to 0.

8.5 Operations of 16-Bit Timer/Event Counter 2

8.5.1 Interval timer operation

16-bit timer/event counter 2 can operate as an interval timer that generates interrupt requests repeatedly using the count value set in advance to 16-bit timer compare register 2 (CR2) as the interval.

When the count value of 16-bit timer counter 2 (TM2) matches the value set to CR2, counting continues, with the TM2 value cleared to 0, and an interrupt request signal (INTTM2) is generated.

The count clock of TM2 can be selected with bits 0 and 1 (TCL20 and TCL21) of timer mode control register 2 (TMC2).

The setting method is described below.

<1> Setting of each register is performed after the timer count operation is stopped (TCE2 = 0).
- CR2: Compare value
- TMC2: Count clock selection

<2> Setting TCE2 to 1 enables the timer count operation.

<3> When the values of TM2 and CR2 match, INTTM2 is generated (TM2 is cleared to 0000H).

<4> Hereafter, INTTM2 is generated repeatedly at the same interval. To stop the timer count operation, set TCE2 = 0.

Cautions 1. Do not rewrite CR2 during a timer count operation. Rewriting is possible, however, if the value to be written is the same as the one before rewrite.

★ **2. When the internal clock is used as the count clock, the count value of 16-bit timer counter 2 (TM2) changes as follows.**

	Count Value of 16-Bit Timer Counter 2 (TM2)
From when TCE2 = 1 to clearing of 1st count value	Actually input clock count – 1
Following clearing of 1st count value	Actually input clock count

★ **Figure 8-4. Timing of Interval Timer Operation (When Using Internal Clock) (1/2)**

(a) Basic operation

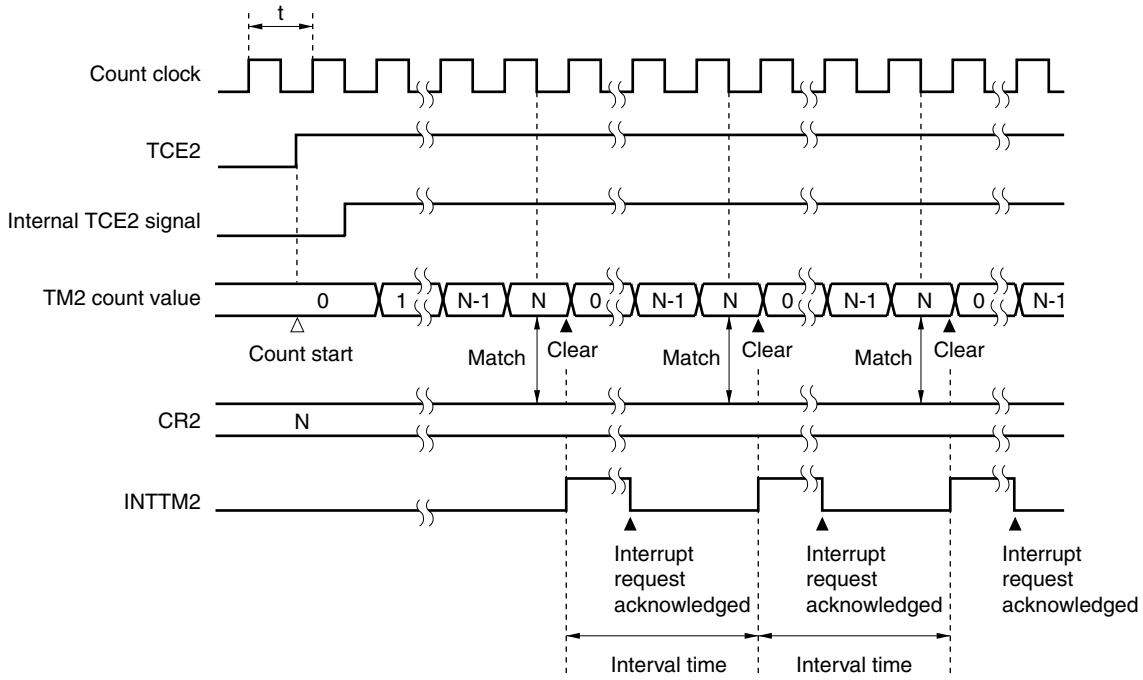

(b) When CR2 = 0000H

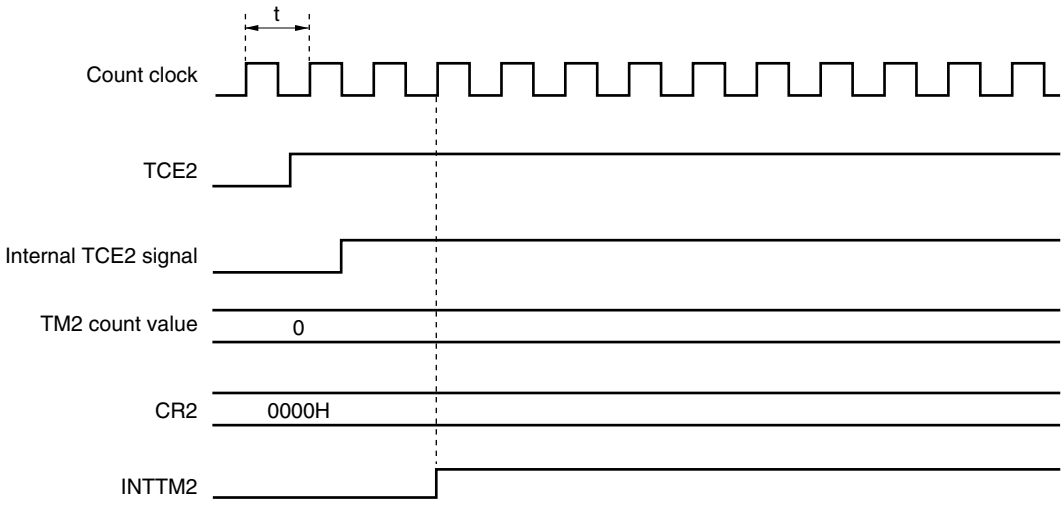

Caution When CR2 is set to 0000H, INTTM2 is fixed to high level, with the result that only the first valid edge is output.

★ **Figure 8-4. Timing of Interval Timer Operation (When Using Internal Clock) (2/2)**

(c) When CR2 = FFFFH

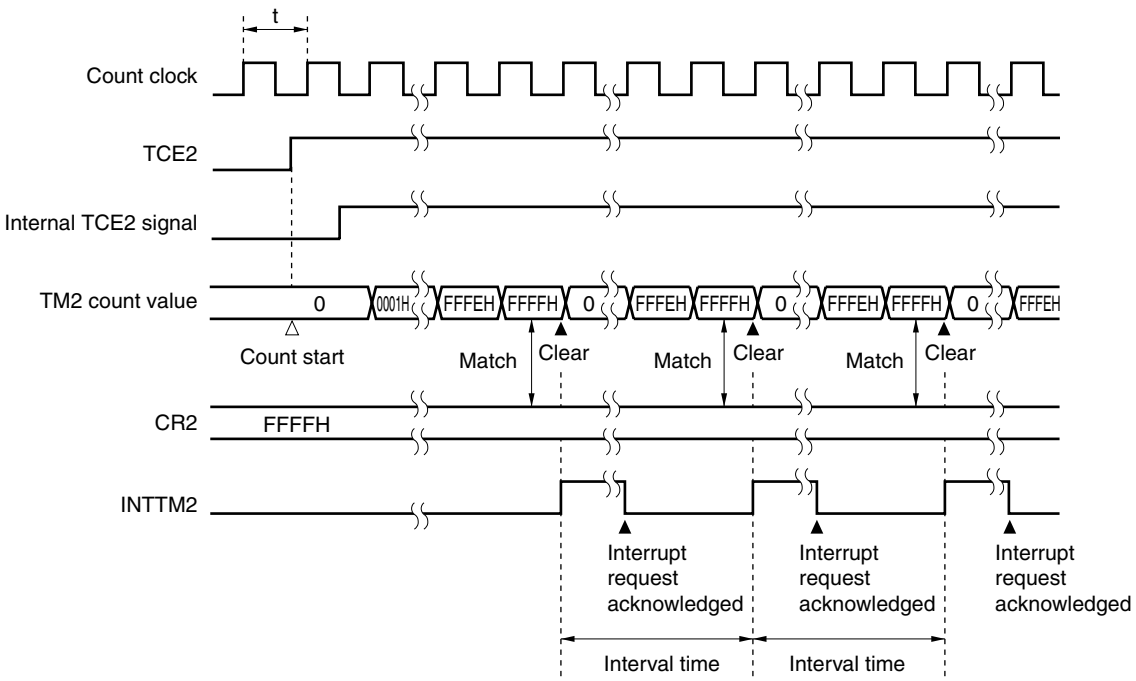

8.5.2 External event counter operation

The external event counter counts the number of external clock pulses to be input to the TI2/P32 pin by 16-bit timer counter 2 (TM2).

TM2 is incremented each time a rising edge is input.

When the TM2 count value matches the 16-bit timer compare register 2 (CR2) value, TM2 is cleared to 0 and an interrupt request signal (INTTM2) is generated.

Cautions 1. When TM2 is used as an external event counter, be sure to set CR2 to a value other than 0000H (1-pulse count operation is impossible).

★ **2. When the external clock is used as the count clock, the count value of 16-bit timer counter 2 (TM2) changes as follows.**

	Count Value of 16-Bit Timer Counter 2 (TM2)
From when TCE2 = 1 to clearing of 1st count value	Actually input clock count – 2
Following clearing of 1st count value	Actually input clock count

Figure 8-5. Control Register Settings in External Event Counter Mode

Timer Mode Control Register 2 (TMC2)

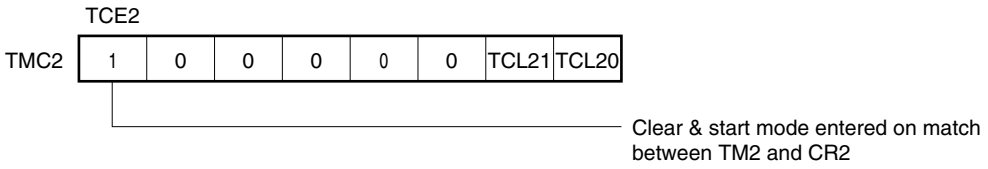

Figure 8-6. Configuration Diagram for External Event Counter

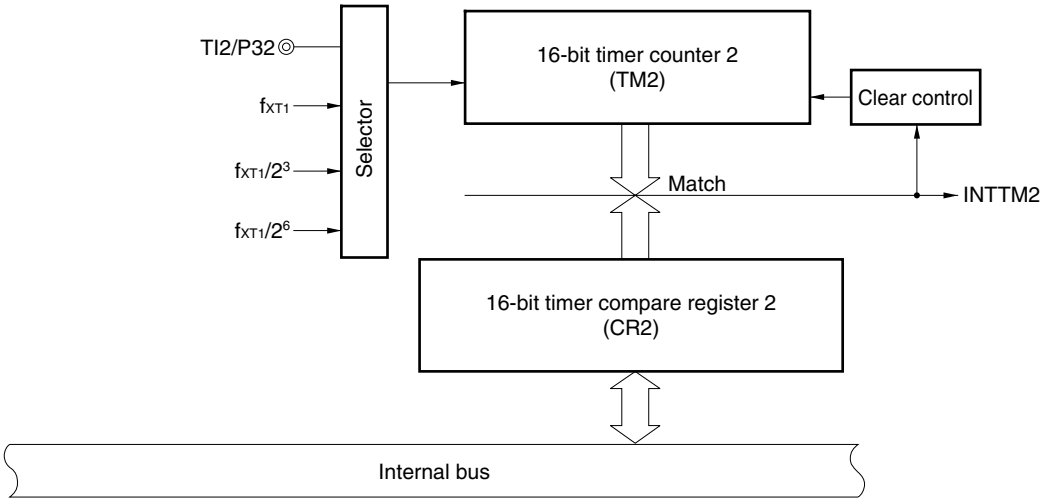

8.5.3 External event counter input control operation

16-bit timer/event counter 2 can be used as an external event counter.

The number of external clock pulses to be input to the TI2/P32 pin is counted by 16-bit timer counter 2 (TM2). The count measurement time is controlled by 8-bit timer 82.

16-bit timer counter 2 (TM2) is incremented each time a rising edge is input.

To stop the count operation, clear the TCE2 flag (bit 7 of timer mode control register 2 (TMC2)) to 0. The TIEN2 flag is automatically cleared to 0 upon generation of 8-bit timer 82's interrupt request signal (INTTM82).

★ **Figure 8-7. Timing of External Event Counter Operation**

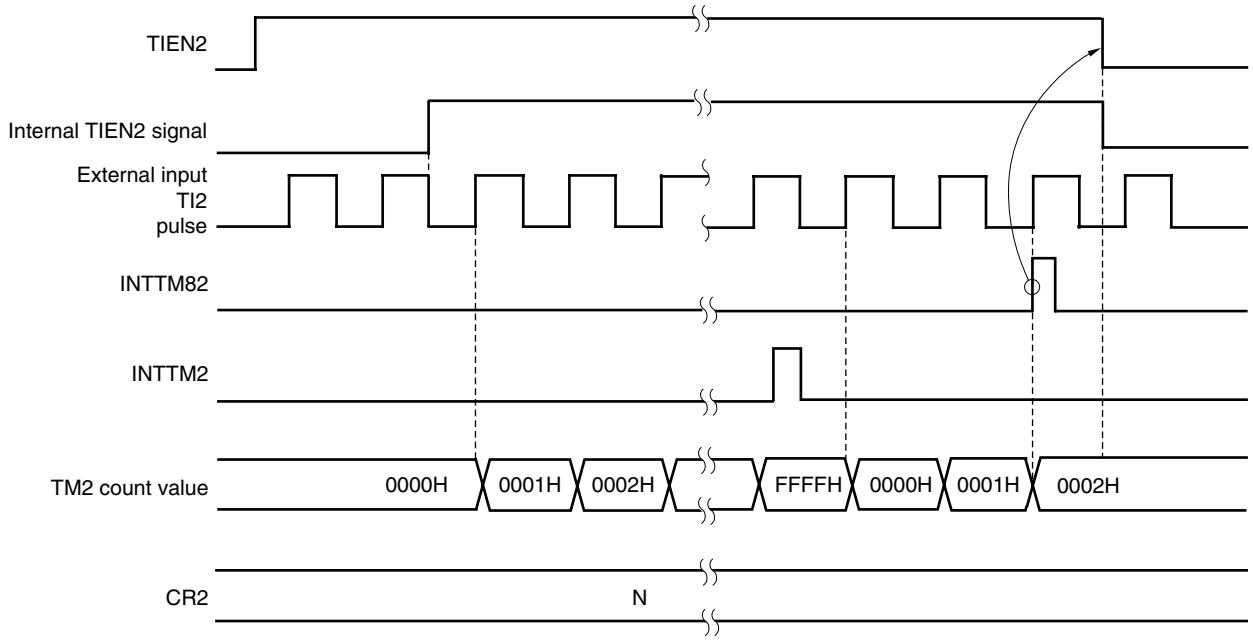

Cautions 1. An external input pulse (TI2/P32) must start from low level. If it starts from high level, one extra pulse may be counted unnecessarily.

2. The 16-bit timer compare register 2 (CR2) value and TM2 count value are constantly compared. If they match, an interrupt request signal (INTTM2) is generated.

8.6 Operating Cautions for 16-Bit Timer/Event Counter 2

(1) Timer start errors

An error of up to 1 clock occurs in the time from timer start until match signal occurrence when using the internal clock and an error of up to 2 clocks occurs in the same time when using an external clock. This is because 16-bit timer counter 2 (TM2) starts operation asynchronously with the count pulse.

★ **Figure 8-8. Start Timing of 16-Bit Timer Counter 2 (TM2)**

(1) When using internal clock

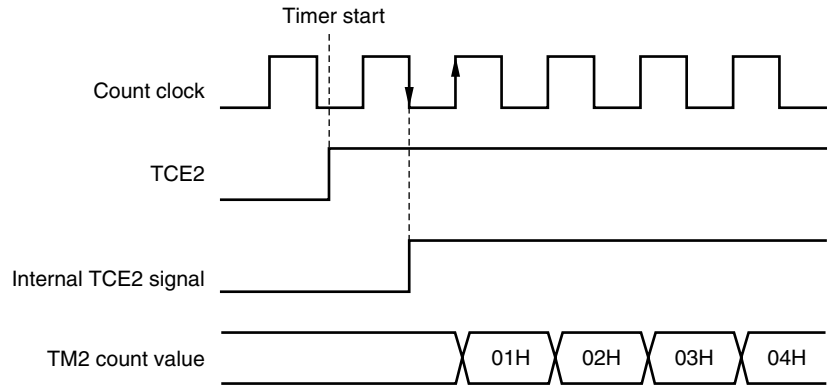

(2) When using external clock

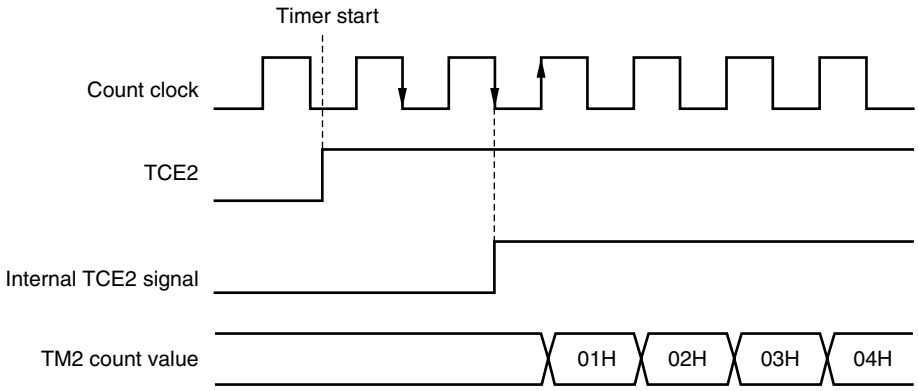

(2) Cautions during timer count operation

(a) 16-bit timer compare register 2 (CR2)

Do not rewrite CR2 during a timer count operation. Rewriting is possible, however, if the value to be written is the same as the one before rewrite.

Timer count operation must be stopped (by setting TCE2 to 0) before rewriting a CR2 value.

(b) Bits 0 and 1 (TCL20 and TCL21) of timer mode control register 2 (TMC2)

Do not write a value to bits 0 and 1 (TCL20 and TCL21) of timer mode control register 2 (TMC2) during a timer count operation.

Timer count operation must be stopped (by setting TCE2 to 0) before setting TCL20 and TCL21.

(3) Cautions while TM2 is operating as an external event counter

- Be sure to set 16-bit timer compare register 2 (CR2) to a value other than 0000H (1-pulse count operation is impossible).
- The CR2 value and TM2 count value are constantly compared. If they match, an interrupt request signal (INTTM2) is generated.

CHAPTER 9 8-BIT TIMERS 80 TO 83

9.1 Outline of 8-Bit Timers 80 to 83

These 8-bit timers can be used as interval timers.

9.2 Functions of 8-Bit Timers 80 to 83

8-bit timers 80 to 83 have an interval timer function. The interval timer generates an interrupt request repeatedly, using the preset count value as interval.

8-bit timer 82 is used to control the external event clock input operation of 16-bit timer/event counter 2.

8-bit timer 83 is used for the real-time output function reload timing.

9.3 Configuration of 8-Bit Timers 80 to 83

8-bit timers 80 to 83 consist of the following hardware.

Table 9-1. Configuration of 8-Bit Timers 80 to 83

Item	Configuration
Timer register	8-bit timer counter 8n (TM80, TM81, TM82, TM83)
Register	8-bit compare register 8n (CR80, CR81, CR82, CR83)
Control register	8-bit timer control register 8n (TMC80, TMC81, TMC82, TMC83)

Remark n = 0 to 3

Figure 9-1 shows the block diagram of 8-bit timers 80 to 83.

Figure 9-1. Block Diagram of 8-Bit Timers 80 to 83

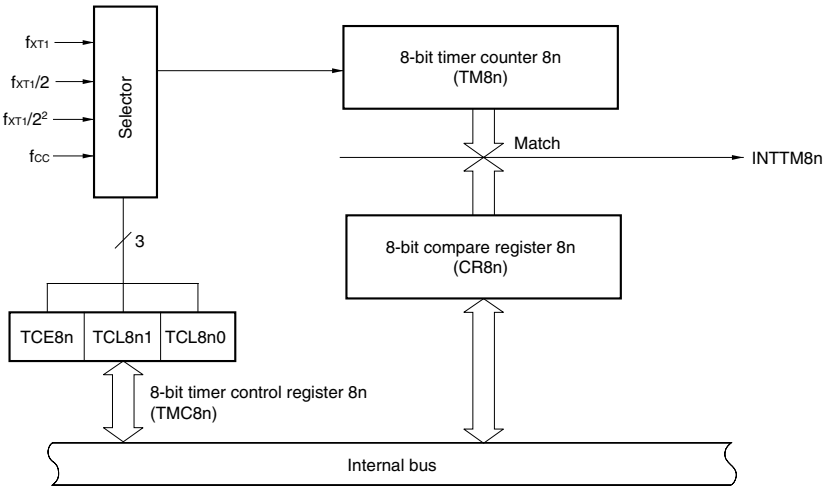

Caution The count clocks in the figure above are those of TM80 and TM81. For the count clocks of TM82 and TM83, refer to Table 9-2.

Remark n = 0 to 3

Table 9-2. Count Clock Values of TM80 to TM83

TM80	TM81	TM82	TM83
f_{XT1} (30.5 μs)		$f_{XT1}/2^7$ (3.9 ms)	f_{XT1} (30.5 μs)
$f_{XT1}/2$ (61 μs)		$f_{XT1}/2^9$ (15.6 ms)	$f_{XT1}/2^3$ (244 μs)
$f_{XT1}/2^2$ (122 μs)		$f_{XT1}/2^{11}$ (62.5 ms)	$f_{XT1}/2^6$ (1.95 ms)
★ f_{CC} (0.83 μs)		$f_{XT1}/2^{13}$ (0.25 s)	$f_{XT1}/2^9$ (15.6 ms)

★ **Remarks 1.** Figures in parentheses apply to operation with f_{CC} = 1.2 MHz and f_{XT1} = 32.768 kHz.

2. f_{CC}: Main system clock oscillation frequency

f_{XT1}: Subsystem clock 1 oscillation frequency

(1) 8-bit compare register 8n (CR8n: n = 0 to 3)

The value set in CR8n is constantly compared with the 8-bit timer counter 8n (TM8n) count value, and an interrupt request signal (INTTM8n) is generated if they match.

The value of CR8n can be set within the range of 00H to FFH.

Caution Do not rewrite the CR8n value during a timer count operation. Rewriting is possible, however, if the value to be written is the same as the one before rewrite.

Remark n = 0 to 3

(2) 8-bit timer counter 8n (TM8n: n = 0 to 3)

This is an 8-bit register that counts the count pulses.

$\overline{\text{RESET}}$ input sets TM8n to 00H.

9.4 Control Register of 8-Bit Timers 80 to 83

8-bit timer control register 8n (TMC8n: n = 0 to 3) is used to control the 8-bit timers 80 to 83.

(1) 8-bit timer control register 8n (TMC8n: n = 0 to 3)

This register is used to enable/disable operation of 8-bit timers 80 to 83 and to set the count clock.

TMC8n is set with a 1-bit or 8-bit memory manipulation instruction.

$\overline{\text{RESET}}$ input sets TMC8n to 00H.

Remark n = 0 to 3

Figure 9-2. Format of 8-Bit Timer Control Register 80 (TMC80)

Address: FF70H After reset: 00H R/W

Symbol	7	6	5	4	3	2	1	0
TMC80	TCE80	0	0	0	0	0	TCL801	TCL800

TCE80	TM80 count operation control
0	Stops count operation (TM80 is cleared to 00H)
1	Enables count operation

TCL801	TCL800	TM80 count clock selection
0	0	f_{XT1} (30.5 μs)
0	1	$f_{XT1}/2$ (61 μs)
1	0	$f_{XT1}/2^2$ (122 μs)
★ 1	1	f_{CC} (0.83 μs)

Cautions 1. Timer operation must be stopped before rewriting TCL800 and TCL801.

2. Be sure to set bits 2 to 6 to 0.

★ **Remarks 1.** Figures in parentheses apply to operation with f_{CC} = 1.2 MHz, f_{XT1} = 32.768 kHz

2. f_{CC}: Main system clock oscillation frequency

f_{XT1}: Subsystem clock 1 oscillation frequency

Figure 9-3. Format of 8-Bit Timer Control Register 81 (TMC81)

Address: FF71H After reset: 00H R/W

Symbol	7	6	5	4	3	2	1	0
TMC81	TCE81	0	0	0	0	0	TCL811	TCL810

TCE81	TM81 count operation control
0	Stops count operation (TM81 is cleared to 00H)
1	Enables count operation

TCL811	TCL810	TM81 count clock selection
0	0	f_{XT1} (30.5 μs)
0	1	$f_{XT1}/2$ (61 μs)
1	0	$f_{XT1}/2^2$ (122 μs)
★ 1	1	f_{CC} (0.83 μs)

Cautions 1. Timer operation must be stopped before rewriting TCL810 and TCL811.

2. Be sure to set bits 2 to 6 to 0.

★ **Remarks 1.** Figures in parentheses apply to operation with f_{CC} = 1.2 MHz, f_{XT1} = 32.768 kHz

2. f_{CC}: Main system clock oscillation frequency

f_{XT1}: Subsystem clock 1 oscillation frequency

Figure 9-4. Format of 8-Bit Timer Control Register 82 (TMC82)

Address: FF72H After reset: 00H R/W

Symbol	7	6	5	4	3	2	1	0
TMC82	TCE82	0	0	0	0	0	TCL821	TCL820

TCE82	TM82 count operation control
0	Stops count operation (TM82 is cleared to 00H)
1	Enables count operation

TCL821	TCL820	TM82 count clock selection
0	0	$f_{XT1}/2^7$ (3.9 ms)
0	1	$f_{XT1}/2^9$ (15.6 ms)
1	0	$f_{XT1}/2^{11}$ (62.5 ms)
1	1	$f_{XT1}/2^{13}$ (0.25 s)

Cautions 1. Timer operation must be stopped before rewriting TCL820 and TCL821.

2. Be sure to set bits 2 to 6 to 0.

Remarks 1. Figures in parentheses apply to operation with f_{XT1} = 32.768 kHz

2. f_{XT1}: Subsystem clock 1 oscillation frequency

Figure 9-5. Format of 8-Bit Timer Control Register 83 (TMC83)

Address: FF73H After reset: 00H R/W

Symbol	7	6	5	4	3	2	1	0
TMC83	TCE83	0	0	0	0	0	TCL831	TCL830

TCE83	TM83 count operation control
0	Stops count operation (TM83 is cleared to 00H)
1	Enables count operation

TCL831	TCL830	TM83 count clock selection
0	0	f_{XT1} (30.5 μs)
0	1	$f_{XT1}/2^3$ (244 μs)
1	0	$f_{XT1}/2^6$ (1.95 ms)
1	1	$f_{XT1}/2^9$ (15.6 ms)

Cautions 1. Timer operation must be stopped before rewriting TCL830 and TCL831.

2. Be sure to set bits 2 to 6 to 0.

Remarks 1. Figures in parentheses apply to operation with f_{XT1} = 32.768 kHz

2. f_{XT1}: Subsystem clock 1 oscillation frequency

9.5 Operations of 8-Bit Timers 80 to 83

8-bit timers 80 to 83 operate as interval timers that generate interrupt requests repeatedly using the count value set in advance to 8-bit compare register 8n (CR8n) as the interval.

When the count value of 8-bit timer counter 8n (TM8n) matches the value set to CR8n, counting continues, with the TM8n value cleared to 0, and an interrupt request signal (INTTM8n) is generated.

The count clock of TM8n can be selected with bits 0 and 1 (TCL8n0 and TMC8n1) of 8-bit timer control register 8n (TMC8n).

The setting method is described below.

<1> Setting of each register is performed after the timer count operation is stopped (TCE8n = 0).
- CR8n: Compare value
- TMC8n: Count clock selection

<2> Setting TCE8n to 1 starts the timer count operation.

<3> When the values of TM8n and CR8n match, INTTM8n is generated (TM8n is cleared to 00H).

<4> Hereafter, INTTM8n is generated repeatedly at the same interval. To stop the timer count operation, set TCE8n = 0.

Caution Do not rewrite CR8n during a timer count operation. Rewriting is possible, however, if the value to be written is the same as the one before rewrite.

Remark n = 0 to 3

★ **Figure 9-6. Timing of Interval Timer Operation (1/2)**

(a) Basic operation

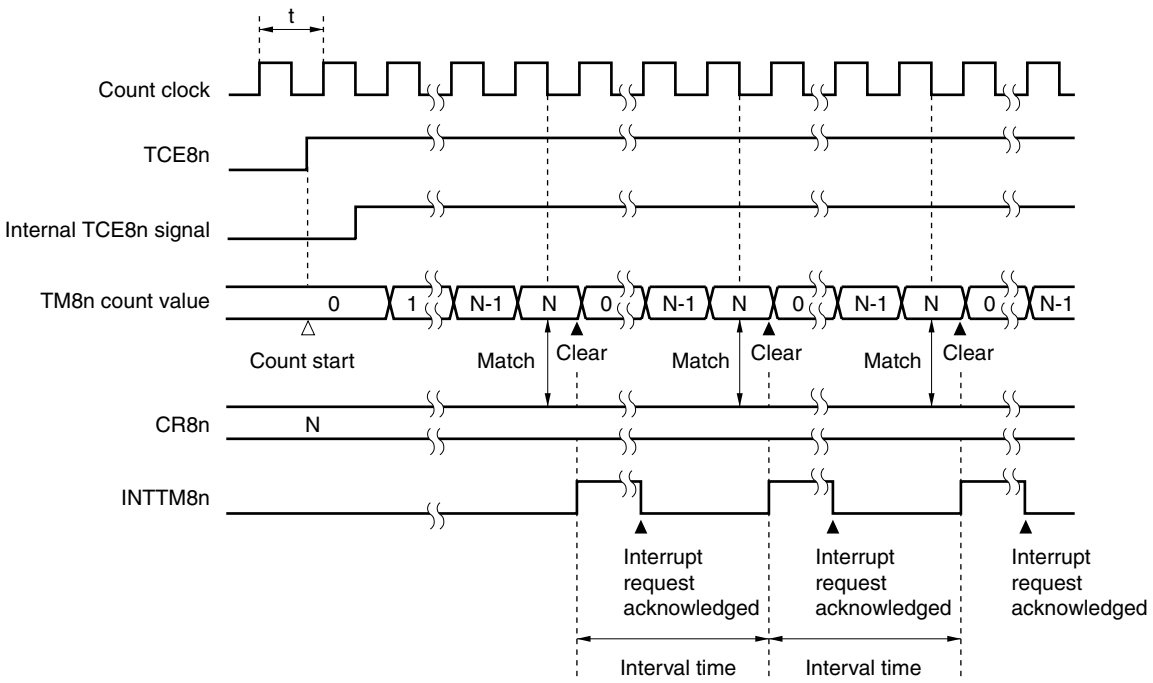

Remark n = 0 to 3

(b) When CR8n = 00H

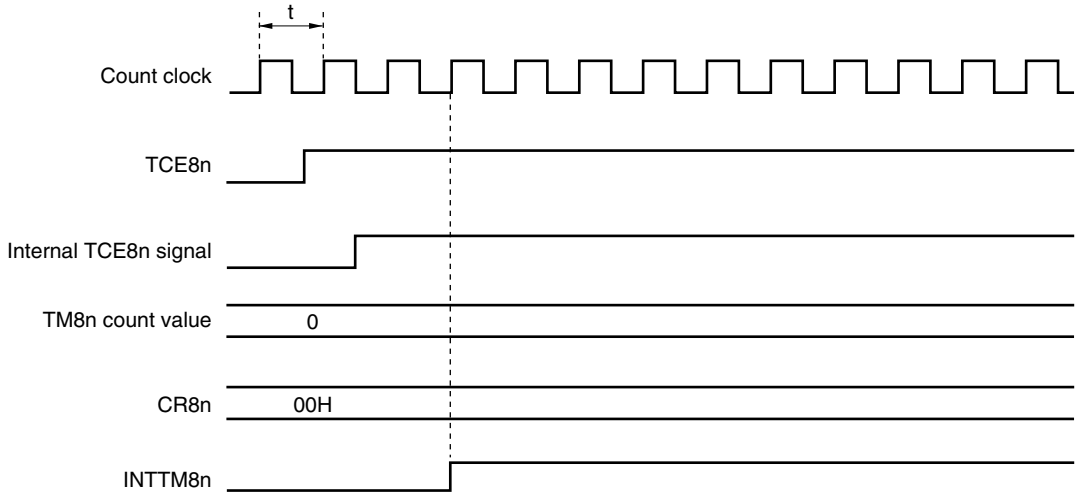

Caution When CR8n is set to 00H, INTTM8n is fixed to high level, with the result that only the first valid edge is output.

Remark n = 0 to 3

★ **Figure 9-6. Timing of Interval Timer Operation (2/2)**

(c) When CR8n = FFH

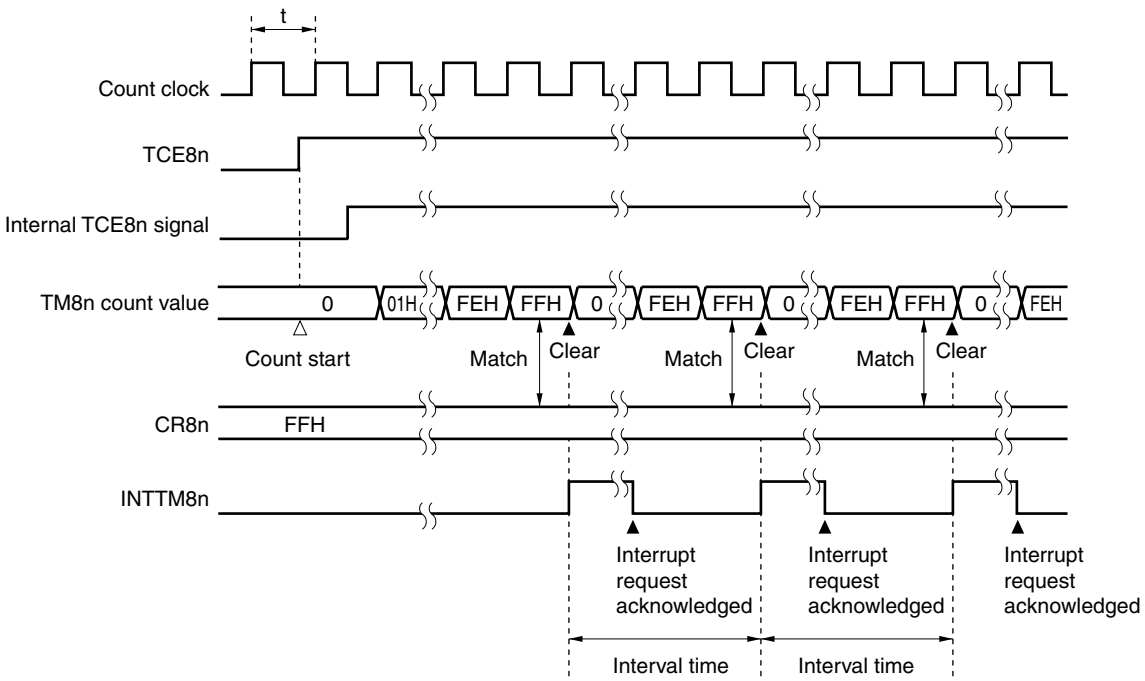

Remark n = 0 to 3

9.6 Operating Cautions for 8-Bit Timers 80 to 83

(1) Timer start errors

An error of up to one clock may occur in the time required for a match signal to be generated after timer start. This is because 8-bit timer counter 8n (TM8n: n = 0 to 3) starts operation asynchronously to the count pulse.

★ **Figure 9-7. Start Timing of 8-Bit Timer Counter 8n (TM8n)**

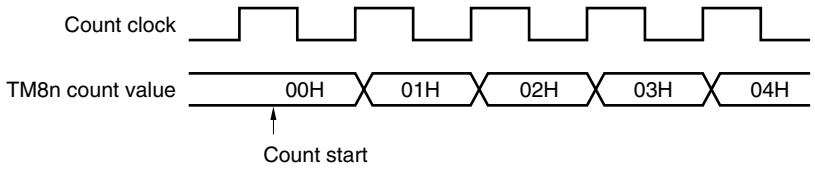

n = 0 to 3

(2) Cautions during timer count operation

(a) 8-bit compare register 8n (CR8n)

Do not rewrite CR8n during a timer count operation. Rewriting is possible, however, if the value to be written is the same as the one before rewrite.

Timer count operation must be stopped (by setting TCE8n to 0) before rewriting a CR8n value.

(b) Bits 0 and 1 (TCL8n0 and TCL8n1) of 8-bit timer control register 8n (TMC8n)

Do not write a value to bits 0 and 1 (TCL8n0 and TCL8n1) of 8-bit timer control register 8n (TMC8n) during a timer count operation.

Timer count operation must be stopped (by setting TCE8n to 0) before setting TCL8n0 and TCL8n1.

Remark n = 0 to 3

CHAPTER 10 WATCHDOG TIMER

10.1 Outline of Watchdog Timer

In addition to a watchdog timer function, the watchdog timer can generate non-maskable interrupt requests, maskable interrupt requests, and the $\overline{\text{RESET}}$ signal (this signal can also be output from the $\overline{\text{WDTOUT}}$ pin) at a preset optional interval.

10.2 Watchdog Timer Functions

The watchdog timer has the following functions.

- Watchdog timer
- Interval timer

Caution Select the watchdog timer mode or interval timer mode by using the watchdog timer mode register (WDTM) (the watchdog timer and interval timer cannot be used simultaneously).

(1) Watchdog timer mode

The watchdog timer is used to detect an inadvertent program loop. When a program loop is detected, a non-maskable interrupt request or the $\overline{\text{RESET}}$ signal can be generated.

The watchdog timer overflow signal can be output from the $\overline{\text{WDTOUT}}$ pin (the pulse width of $\overline{\text{WDTOUT}}$ is 20 μs (TYP.))

Table 10-1. Loop Detection Time of Watchdog Timer

Loop Detection Time	f_{XT1} = 32.768 kHz	Loop Detection Time	f_{XT1} = 32.768 kHz
$f_{XT1}/2^{13}$	0.25 s	$f_{XT1}/2^{17}$	4 s
$f_{XT1}/2^{14}$	0.5 s	$f_{XT1}/2^{18}$	8 s
$f_{XT1}/2^{15}$	1 s	$f_{XT1}/2^{19}$	16 s
$f_{XT1}/2^{16}$	2 s	$f_{XT1}/2^{21}$	64 s

f_{XT1}: Subsystem clock 1 oscillation frequency

(2) Interval timer mode

When the watchdog timer is used as an interval timer, it generates an interrupt request at time intervals set in advance.

Table 10-2. Interval Time

Interval Time	f_{XT1} = 32.768 kHz	Interval Time	f_{XT1} = 32.768 kHz
$f_{XT1}/2^{13}$	0.25 s	$f_{XT1}/2^{17}$	4 s
$f_{XT1}/2^{14}$	0.5 s	$f_{XT1}/2^{18}$	8 s
$f_{XT1}/2^{15}$	1 s	$f_{XT1}/2^{19}$	16 s
$f_{XT1}/2^{16}$	2 s	$f_{XT1}/2^{21}$	64 s

f_{XT1}: Subsystem clock 1 oscillation frequency

10.3 Watchdog Timer Configuration

The watchdog timer consists of the following hardware.

Table 10-3. Watchdog Timer Configuration

Item	Configuration
Control registers	Watchdog timer clock select register (WDCS) Watchdog timer mode register (WDTM)

★ **Figure 10-1. Block Diagram of Watchdog Timer**

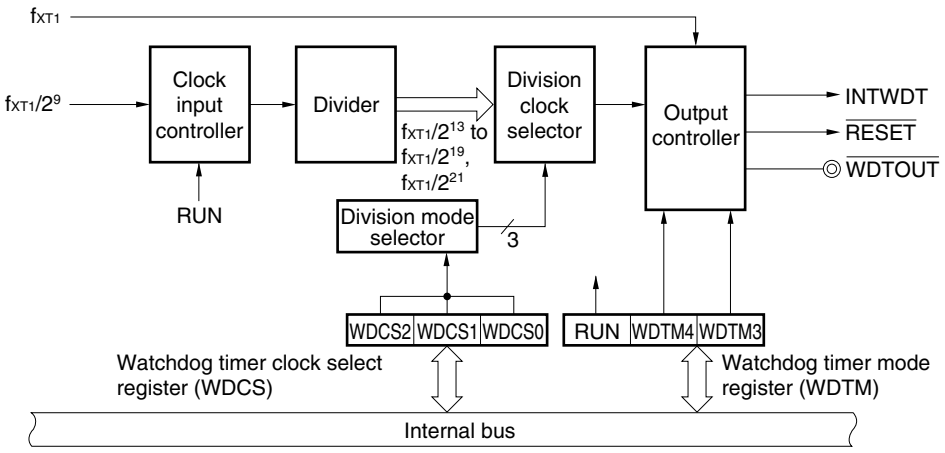

Caution The pulse width of $\overline{\text{WDTOUT}}$ is 20 μs (TYP.).

10.4 Watchdog Timer Control Registers

The following two registers are used to control the watchdog timer.

- Watchdog timer clock select register (WDCS)
- Watchdog timer mode register (WDTM)

(1) Watchdog timer clock select register (WDCS)

This register is used to set the overflow time of the watchdog timer and interval timer.

WDCS is set with an 8-bit memory manipulation instruction.

$\overline{\text{RESET}}$ input sets WDCS to 00H.

Figure 10-2. Format of Watchdog Timer Clock Select Register (WDCS)

Address: FF42H After reset: 00H R/W

Symbol	7	6	5	4	3	2	1	0
WDCS	0	0	0	0	0	WDCS2	WDCS1	WDCS0

WDCS2	WDCS1	WDCS0	Watchdog timer/interval timer overflow time
0	0	0	$f_{XT1}/2^{13}$ (0.25 s)
0	0	1	$f_{XT1}/2^{14}$ (0.5 s)
0	1	0	$f_{XT1}/2^{15}$ (1 s)
0	1	1	$f_{XT1}/2^{16}$ (2 s)
1	0	0	$f_{XT1}/2^{17}$ (4 s)
1	0	1	$f_{XT1}/2^{18}$ (8 s)
1	1	0	$f_{XT1}/2^{19}$ (16 s)
1	1	1	$f_{XT1}/2^{21}$ (64 s)

Remarks 1. f_{XT1}: Subsystem clock 1 oscillation frequency

2. Figures in parentheses apply to operation with f_{XT1} = 32.768 kHz

(2) Watchdog timer mode register (WDTM)

This register is used to set the watchdog timer operation mode, and enables/disables the counting operation of the watchdog timer.

WDTM is written with a 1-bit or 8-bit memory manipulation instruction.

WDTM is a write-only register.

$\overline{\text{RESET}}$ input sets WDTM to 00H.

Figure 10-3. Format of Watchdog Timer Mode Register (WDTM)

Address: FFF9H After reset: 00H W

Symbol	7	6	5	4	3	2	1	0
WDTM	RUN	0	0	WDTM4	WDTM3	0	0	0

RUN	Watchdog timer operation mode selection[Note 1]
0	Counting stopped
1	Counter cleared and counting restarted

WDTM4	WDTM3	Watchdog timer operation mode selection[Note 2]
0	×	Interval timer mode[Note 3] (Maskable interrupt request is generated when overflow occurs)
1	0	Watchdog timer mode 1 (Non-maskable interrupt request is generated when overflow occurs)
1	1	Watchdog timer mode 2 (Reset operation is activated when overflow occurs, and a low-level signal is output to $\overline{\text{WDTOUT}}$ pin)

Notes 1. Once RUN is set to 1, it cannot be cleared to 0 by software. Therefore, once the counting operation is started, it cannot be stopped by any means other than $\overline{\text{RESET}}$ input.

2. Once WDTM3 and WDTM4 are set to 1, they cannot be cleared to 0 by software.

3. The watchdog timer starts operation as an interval timer as soon as RUN is set to 1.

★ **Caution When the watchdog timer is cleared by setting RUN to 1, the actual overflow time is up to $2^9/f_{XT1}$ seconds shorter than the time set by the watchdog timer clock select register (WDCS).**

Remark ×: don't care

10.5 Watchdog Timer Operations

10.5.1 Watchdog timer operation

Setting bit 4 (WDTM4) of the watchdog timer mode register (WDTM) to 1 specifies operation as a watchdog timer, which is used to detect an inadvertent program loop.

The count clock (loop detection time interval) of the watchdog timer can be selected by setting bits 0 to 2 (WDCS0 to WDCS2) of the watchdog timer clock select register (WDCS). The watchdog timer starts the count operation by setting bit 7 (RUN) of WDTM to 1. After the watchdog timer starts the count operation, if RUN is set to 1 again within the loop detection time interval set in advance, the watchdog timer is cleared and the count operation restarts.

If the loop detection time had elapsed without RUN having been set to 1, the system is reset or a non-maskable interrupt request is generated according to the value of WDTM bit 3 (WDTM3). When the system is reset, a low-level signal of 20 μs (TYP.) is output from $\overline{\text{WDTOUT}}$ pin at the same time.

The watchdog timer continues operation in the HALT mode.

★ **Caution The actual loop detection time may be up to $2^9/f_{XT1}$ seconds shorter than the set time.**

Table 10-4. Loop Detection Time of Watchdog Timer

WDCS2	WDCS1	WDCS0	Watchdog Timer Loop Detection Time
0	0	0	$f_{XT1}/2^{13}$ (0.25 s)
0	0	1	$f_{XT1}/2^{14}$ (0.5 s)
0	1	0	$f_{XT1}/2^{15}$ (1 s)
0	1	1	$f_{XT1}/2^{16}$ (2 s)
1	0	0	$f_{XT1}/2^{17}$ (4 s)
1	0	1	$f_{XT1}/2^{18}$ (8 s)
1	1	0	$f_{XT1}/2^{19}$ (16 s)
1	1	1	$f_{XT1}/2^{21}$ (64 s)

Remarks 1. f_{XT1}: Subsystem clock oscillation 1 frequency

2. Figures in parentheses apply to operation with f_{XT1} = 32.768 kHz

10.5.2 Interval timer operation

Setting bit 4 (WDTM4) of the watchdog timer mode register to 0 specifies operation as an interval timer, which is used to generate an interrupt request repeatedly using the preset count clock as the interval.

The count clock (interval time) can be selected by setting bits 0 to 2 (WDCS0 to WDCS2) of the watchdog timer clock select register (WDCS). The watchdog timer starts operation as an interval timer when bit 7 (RUN) of WDTM is set to 1.

The interval timer continues operation in the HALT mode.

Cautions 1. Once bit 4 (WDTM4) of WDTM has been set to 1 (this setting selects the watchdog timer mode), the interval timer mode is disabled, unless the $\overline{\text{RESET}}$ signal is input.

★ **2. The interval time immediately after it has been set by WDTM may be up to $2^9/f_{XT1}$ seconds shorter than the set time.**

Table 10-5. Interval Time of Interval Timer

WDCS2	WDCS1	WDCS0	Interval Time
0	0	0	$f_{XT1}/2^{13}$ (0.25 s)
0	0	1	$f_{XT1}/2^{14}$ (0.5 s)
0	1	0	$f_{XT1}/2^{15}$ (1 s)
0	1	1	$f_{XT1}/2^{16}$ (2 s)
1	0	0	$f_{XT1}/2^{17}$ (4 s)
1	0	1	$f_{XT1}/2^{18}$ (8 s)
1	1	0	$f_{XT1}/2^{19}$ (16 s)
1	1	1	$f_{XT1}/2^{21}$ (64 s)

Remarks 1. f_{XT1}: Subsystem 1 clock oscillation frequency

2. Figures in parentheses apply to operation with f_{XT1} = 32.768 kHz

CHAPTER 11 SAMPLING OUTPUT TIMER/DETECTOR

11.1 Outline of Sampling Output Timer/Detector

This is a function that outputs and detects a sampling pulse periodically. After $\overline{\text{RESET}}$, the sampling output timer/detector functions as a normal timer.

11.2 Sampling Output Timer/Detector Function

The sampling output timer/detector employs pins from which a sampling pulse signal is output periodically. By supplying this pulse signal to a switch in the target, input-closed circuits for the SMP1 to SMP4 pins are realized, and the state of the switch is checked.

The sampling output timer/detector can generate an interrupt request when a switch in the target is set to a specified state, removing the necessity of releasing the HALT mode frequently.

Moreover, by making a setting whereby an interrupt is generated only when a switch is set to a specified state, the sampling output timer/detector can control interrupt generation, removing the necessity of releasing the HALT mode at an unnecessary timing.

Caution After $\overline{\text{RESET}}$, the sampling output timer/detector functions as a normal timer.

11.3 Sampling Output Timer/Detector Configuration

The sampling output timer/detector consists of a 2-channel 8-bit timer. Sampling output mode and 8-bit timer mode can be selected.

- **Sampling output mode**[Note]
  - <1> For the panel output cycle count of the SMO0 pin, a match signal between TMSA0 and TMSB0 or a match signal between Prin output and TMSB0 can be selected.
  - <2> When a match signal between Prin output and TMSB0 is selected for the panel output cycle count, TMSA0 can operate separately as an interval timer.
  - <3> Sampling of the SMP0 to SMP4 pins is performed at the falling edge of SMO0. The level of the sampling interrupt can be set using SMTD sampling level setting register 0 (SMS0).
  - <4> The levels of the SMP0 to SMP4 pins, which are latched at the sampling timing, can be identified using SMTD sampling pin status register 0 (SMD0).

- **8-bit timer mode**
  - <1> TMSA0 and TMSB0 can operate as separate 8-bit timers.
  - <2> For the pulse output of the SMO0 pin, TMSA0 or Prin output (0.5 s interval clock (when f_{XT1} = 32.768 kHz operation (f_{XT1}: Subsystem clock 1 oscillation frequency))) can be selected.

★ **Note** • Setting when match signal between TMSB0 and TMSA0 is selected:
TMSB0 interval time ≤ half of TMSA0 interval time
• Setting when match signal between TMSB0 and Prin output is selected:
TMSB0 interval time ≤ half of Prin cycle
(Sampling output is equal to or less than 1/2 duty.)
• Selected clock cycle setting: TMSB0 selected clock cycle ≤ TMSA0 selected clock cycle
• Formula of SMO0 cycle of sampling clock and high-level width:
Cycle: (CRSA0 + 1) × TMSA0 clock width
High-level width:
<1> When TMSA0 clock width = TMSB0 clock width, or TMSB0 clock = f_{XT1}:
(CRSB0 + 1) × TMSB0 clock width
<2> When TMSA0 clock width > TMSB0 clock width:
(CRSB0 + 0.5) × TMSB0 clock width
<3> When TMSA0 clock width < TMSB0 clock width:
(CRSB0 + 0.5) × TMSB0 clock width ± Gap width (Gap width: TMSB0 clock width/2 max.)

★ **Caution In the 8-bit timer mode, sampling of the SMPn bit (n:0 to 4) is not performed.**

Figure 11-1 shows the block diagram of the sampling output timer/detector.

Figure 11-1. Block Diagram of Sampling Output Timer/Detector

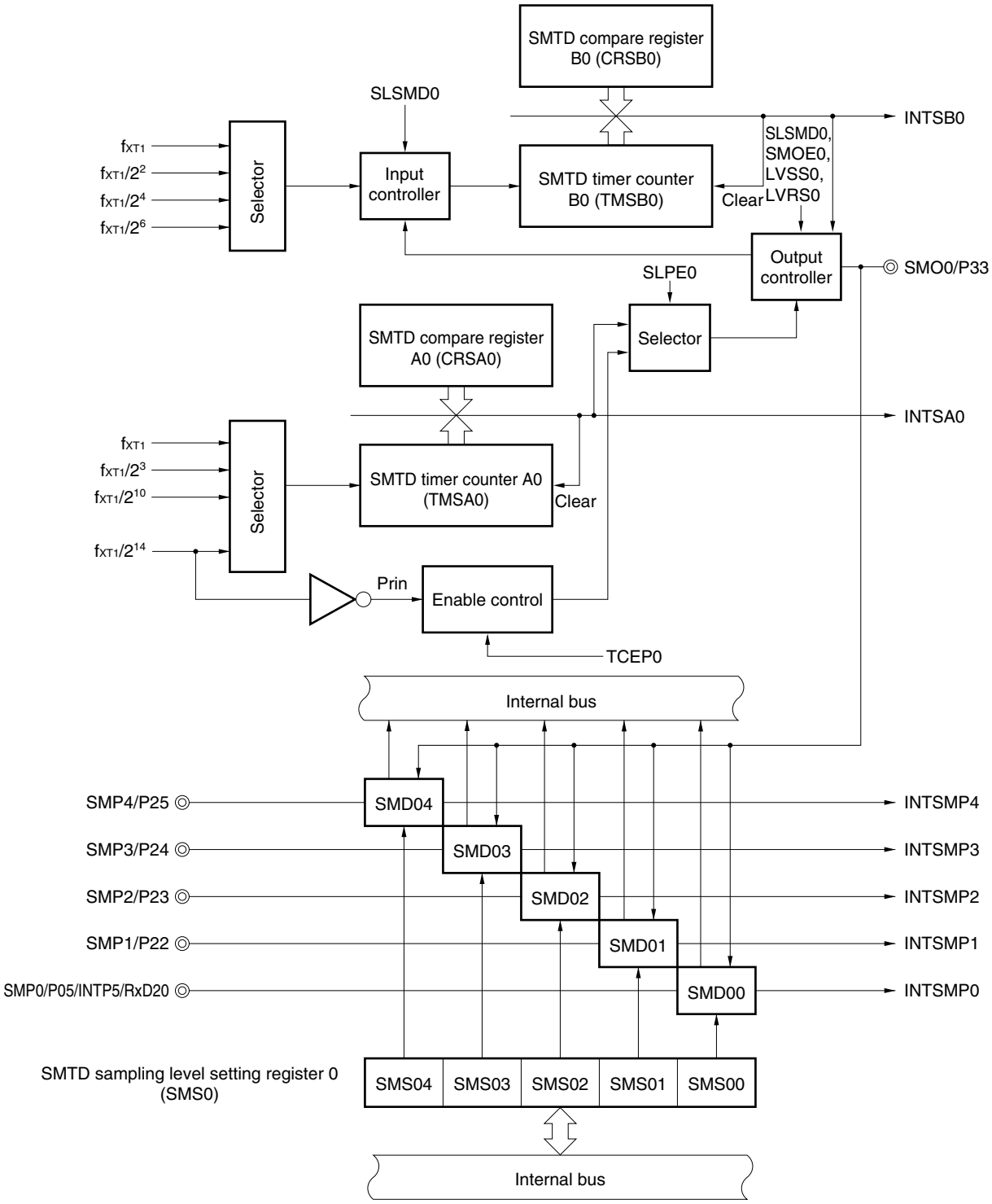

11.4 Sampling Output Timer/Detector Control Registers

The following nine registers are used to control the sampling output timer/detector.

- SMTD timer counter A0 (TMSA0)
- SMTD timer counter B0 (TMSB0)
- SMTD compare register A0 (CRSA0)
- SMTD compare register B0 (CRSB0)
- SMTD clock select register A0 (TCSA0)
- SMTD clock select register B0 (TCSB0)
- SMTD control register 0 (TSM0)
- SMTD sampling level setting register 0 (SMS0)
- SMTD sampling pin status register 0 (SMD0)

(1) SMTD timer counter A0 (TMSA0)

TMSA0 is an 8-bit read-only register that counts the count pulse.

The counter is incremented in synchronization with the rising edge of the count clock.

Even if the count value is read out during a count operation, the count operation will not stop. Therefore, the read value may differ from the actual count value.

The count value becomes 00H in the following cases.

<1> $\overline{\text{RESET}}$ input

<2> TCESA0 cleared

<3> Match between TMSA0 and CRSA0

(2) SMTD timer counter B0 (TMSB0)

TMSB0 is an 8-bit counter that counts the count pulse.

This counter cannot be operated directly by a program (read/write disabled).

The counter is incremented in synchronization with the rising edge of the count clock.

The count value becomes 00H in the following cases.

<1> $\overline{\text{RESET}}$ input

<2> TCESB0 cleared

<3> Match between TMSB0 and CRSB0

★ <4> In the sampling output mode, when SMO0 = low level

(3) SMTD compare register A0 (CRSA0)

The value set in CRSA0 is constantly compared with the count value of SMTD timer counter A0 (TMSA0). If they match, an interrupt request (INTSA0) is generated.

The value of CRSA0 can be set within the range of 00H to FFH.

Rewriting during a count operation is prohibited.

(4) SMTD compare register B0 (CRSB0)

The value set in CRSB0 is constantly compared with the count value of SMTD timer counter B0 (TMSB0). If they match, an interrupt request (INTSB0) is generated.

The value of CRSB0 can be set within the range of 00H to FFH.

Rewriting during a count operation is prohibited.

(5) SMTD clock select register A0 (TCSA0)

TCSA0 is a register that sets the count clock for SMTD timer counter A0 (TMSA0).

TCSA0 is set with a 1-bit or 8-bit memory manipulation instruction.

$\overline{\text{RESET}}$ input sets TCSA0 to 00H.

Figure 11-2. Format of SMTD Clock Select Register A0 (TCSA0)

Address: FF74H After reset: 00H R/W

Symbol	7	6	5	4	3	2	1	0
TCSA0	0	0	0	0	0	0	TCA01	TCA00

TCA01	TCA00	Clock selection
0	0	f_{XT1} (30.5 μs)
0	1	$f_{XT1}/2^3$ (244 μs)
1	0	$f_{XT1}/2^{10}$ (31.3 ms)
1	1	$f_{XT1}/2^{14}$ (0.5 s)

Caution The TMSA0 count operation must be stopped before setting TCSA0.

Remark Figures in parentheses apply to operation with f_{XT1} = 32.768 kHz (f_{XT1}: Subsystem clock 1 oscillation frequency).

(6) SMTD clock select register B0 (TCSB0)

TCSB0 is a register that sets the count clock for SMTD timer counter B0 (TMSB0).

TCSB0 is set with a 1-bit or 8-bit memory manipulation instruction.

$\overline{\text{RESET}}$ input sets TCSB0 to 00H.

Figure 11-3. Format of SMTD Clock Select Register B0 (TCSB0)

Address: FF75H After reset: 00H R/W

Symbol	7	6	5	4	3	2	1	0
TCSB0	0	0	0	0	0	0	TCB01	TCB00

TCB01	TCB00	Clock selection
0	0	f_{XT1} (30.5 μs)
0	1	$f_{XT1}/2^2$ (122 μs)
1	0	$f_{XT1}/2^4$ (488 μs)
1	1	$f_{XT1}/2^6$ (1.95 ms)

Caution The TMSB0 count operation must be stopped before setting TCSB0.

Remark Figures in parentheses apply to operation with f_{XT1} = 32.768 kHz (f_{XT1}: Subsystem clock 1 oscillation frequency).

(7) SMTD control register 0 (TSM0)

TSM0 is a register that controls the count operation of SMTD timer counters A0 and B0 (TMSA0 and TMSB0) and Prin, selects the SMO0 output mode, controls the SMO0 output signal selection and the timer output, and sets the initial setting of the SMO0 output level.

TSM0 is set with a 1-bit or 8-bit memory manipulation instruction.

$\overline{\text{RESET}}$ input sets TSM0 to 00H.

Figure 11-4. Format of SMTD Control Register 0 (TSM0)

Address: FF76H After reset: 00H R/W

Symbol	7	6	5	4	3	2	1	0
TSM0	TCESA0	TCESB0	TCEP0	SLSMD0	SLPE0	SMOE0	LVSS0	LVRS0

TCESA0	TMSA0 count enable flag
0	Stops TMSA0 count operation (TMSA0 = 00H)
1	Enables TMSA0 count operation

TCESB0	TMSB0 count enable flag
0	Stops TMSB0 count operation (TMSB0 = 00H)
1	Enables TMSB0 count operation

TCEP0	Prin (prescaler input) count enable flag
0	Stops Prin count operation
1	Enables Prin count operation

SLSMD0	SMO0 output mode selection flag
0	Timer mode
1	Sampling output mode

SLPE0	SMO0 output signal control selection flag[Note]
0	Selects Prin (0.5 s: with f_{XT1} = 32.768 kHz operation)
1	Selects a match signal (INTSA0) between TMSA0 and CRSA0

SMOE0	Output control flag
0	Disables output (port mode)
1	Enables output

LVSS0	LVRS0	Timer output F/F initial state setting flag
0	0	No change
0	1	Resets timer output F/F to 0
1	0	Sets timer output F/F to 1
1	1	Setting prohibited

Note This is a flag that selects a signal that is to be input to the output controller and output from the SMO0 output pin. This flag is used for frequency selection in the sampling output mode, and for output-pulse width selection in the timer mode.

Cautions 1. Timer operation must be stopped before setting bits 0 to 5 (LVRS0, LVSS0, SMOE0, SLPE0, SLSMD0, TCEP0).

2. Setting of TCESA0, TCESB0, TCEP0, and SMOE0 should be performed after SLSMD0, SLPE0, LVSS0, and LVRS0 are set.

3. SLSMD0, SLPE0, LVSS0, and LVRS0 cannot be written while SMOE0 is 1.

4. Write to TCESA0, TCESB0, and SMOE0 ("0" → "1" or "1" → "0") at the same time that SLSMD0 = 1, SLPE0 = 1 are set (in the sampling mode, when INTSA0 is selected).

5. Write to TCESB0, TCEP0, and SMOE0 ("0" → "1" or "1" → "0") at the same time that SLSMD0 = 1, SLPE0 = 0 are set (in the sampling mode, when Prin (0.5 s) is selected).

6. Write to TCESA0, TCESB0, and SMOE0 ("0" → "1" or "1" → "0") at the same time that SLSMD0 = 0, SLPE0 = 1 are set (in the timer mode, when INTSA0 is selected).

7. Write to TCESB0, TCEP0, and SMOE0 write ("0" → "1" or "1" → "0") at the same time that SLSMD0 = 0, SLPE0 = 0 are set (in the timer mode, when Prin (0.5 s) is selected).

8. When using the SMO0/P33 pin as a general-purpose port pin, be sure to set SMOE0 to 0 in the timer mode (SLSMD0 = 0) (In the sampling mode, the SMO0/P33 pins may be high-level output when SMOE0 = 0. Also, in the timer mode, the SMO0/P33 pins may be high-level output when SMOE0 = 1).

9. The sampling signal detect register (SMD0) and INTSMP0 to INTSMP4 can operate only when SLSMD0 is 1 (sampling mode).

10. In the sampling mode, the state of the SMO0/P33 pin (sampling clock) output is maintained when the value of SMOE0 is changed from "1" to "0".

11. In the sampling mode, after the value of SMOE0 has been changed from "1" to "0" to hold the value of the SMO0/P33 pin output at high level and then changed again from "0" to "1", the level of the SMO0/P33 pin output changes from high to low at the falling edge of subsystem clock 1 (32.768 kHz) and sampling clock output starts. Moreover, sampling of the SMP0 to SMP4 pins is performed at the falling edge of the SMO0/P33 pin.

12. In the sampling mode, if the value of SMOE0 is changed from "0" to "1" to hold the value of the SMO0/P33 pin output at low level, an interrupt signal is output according to the data (bits 0 to 4 (SMD00 to SMD04) of SMTD sampling pin status register 0 (SMD0)) sampled when SMOE0 was written ("0" → "1") immediately before the held value.

13. In the timer mode, the level of the SMO0/P33 pin output is held when the value of SMOE0 is changed from "1" to "0". Therefore, next time the value of SMOE0 is changed from "0" to "1", the held value is output.

14. If, during operation in the sampling mode, the sampling signal active level setting flag (SMS0) is rewritten, the contents of INTSMP0 to INTSMP4 and SMD00 to SMD04 may differ.

★ **15. The SMD0 data may be destroyed after the SMD0 data is read, but the status of the SMP0 to SMP4 pins is sampled after one cycle of subsystem clock 1 (32.768 kHz).**

★ **16. After the count value of SMTD timer counter A0 (TMSA0) has been read, that data may be destroyed, but the count value is read again after the lapse of 1 cycle of the TMSA0 selection clock.**

(8) SMTD sampling level setting register 0 (SMS0)

If the sampling input level of the SMP0 to SMP4 pins matches the level that is set as an active level by SMS0, a sampling interrupt (INTSMP0 to INTSMP4) can be generated.

Sampling of the SMP0 to SMP4 pins is performed at the falling edge of the sampling clock.

SMS0 is set with a 1-bit or 8-bit memory manipulation instruction.

$\overline{\text{RESET}}$ input sets SMS0 to 00H.

Figure 11-5. Format of SMTD Sampling Level Setting Register 0 (SMS0)

Address: FF77H After reset: 00H R/W

Symbol	7	6	5	4	3	2	1	0
SMS0	0	0	0	SMS04	SMS03	SMS02	SMS01	SMS00

SMS0n	Sampling signal active level setting flag (n = 0 to 4)
0	An interrupt request is generated if a low-level signal is detected at the falling edge of the sampling clock
1	An interrupt request is generated if a high-level signal is detected at the falling edge of the sampling clock

★ **Caution When SLSMD0 = 1 and SMOE0 = 1 (in the sampling output mode), do not write to SMS0.**

(9) SMTD sampling pin status register 0 (SMD0)

SMD0 is a register that detects the status of the SMP0 to SMP4 pins, which are latched at the falling edge of the sampling clock (SMO0).

SMD0 operates only in the sampling output mode (bit 4 (SLSMD0) of SMTD control register 0 (TSM0) is 1).

SMD0 is read with a 1-bit or 8-bit memory manipulation instruction.

$\overline{\text{RESET}}$ input sets SMD0 to 00H.

Figure 11-6. Format of SMTD Sampling Pin Status Register 0 (SMD0)

Address: FF78H After reset: 00H R

Symbol	7	6	5	4	3	2	1	0
SMD0	0	0	0	SMD04	SMD03	SMD02	SMD01	SMD00

SMD0n	SMPn pin status (n = 0 to 4)
0	Low level
1	High level

Caution When sampling output is stopped (the timer enable flag used is cleared to 0), SMD0 becomes undefined. Therefore, the interrupt mask flags of INTSMP0 to INTSMP4 must be set to 1 (disabling interrupt servicing) before stopping the sampling output.

Figure 11-7 shows the SMO0 output timings in the sampling output mode and in the timer mode.

Figure 11-7. Timing Chart of SMO0 Output

(1) SMO0 output in the sampling output mode

• When a match signal between TMSA0 and TMSB0 is selected

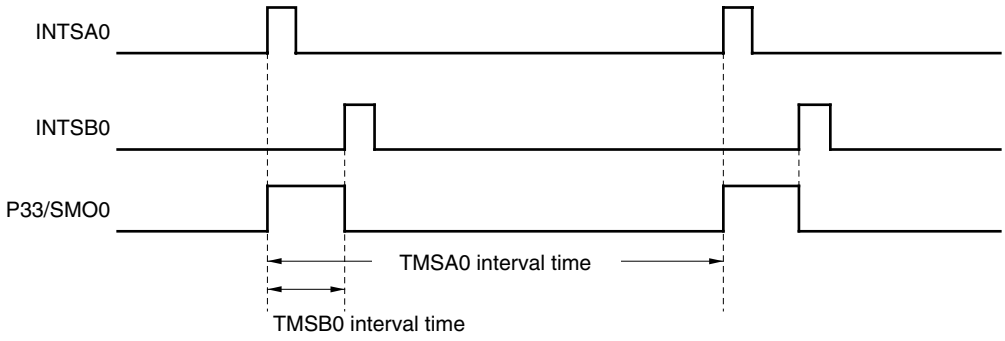

• When a match signal between Prin output and TMSB0 is selected

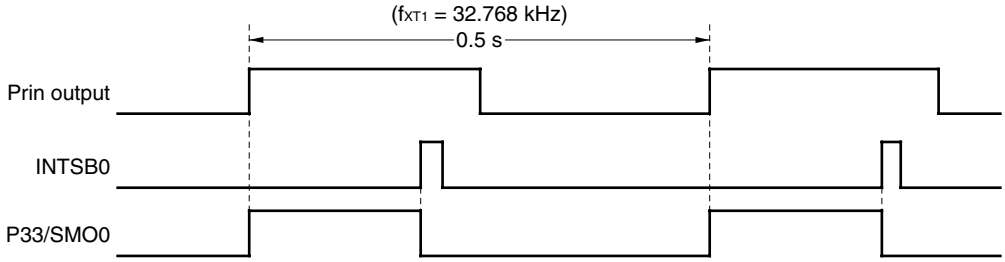

(2) SMO0 output in the timer mode

• When a match signal between TMSA0 and TMSB0 is selected

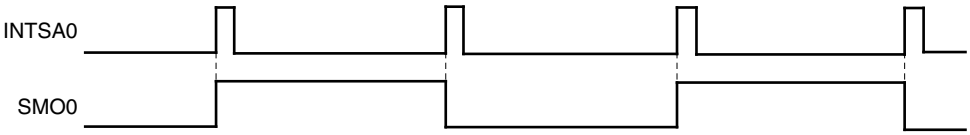

• When a match signal between Prin output and TMSB0 is selected

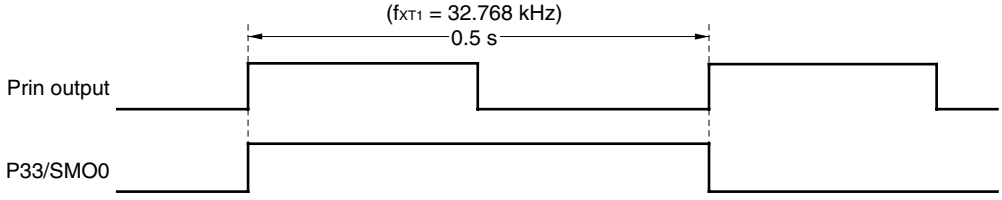

Figure 11-8 shows the sampling detection timing.

Figure 11-8. Timing Chart of Sampling Detection

[Sampling detection 1]

<When the active level of sampling input is high for interrupt generation>

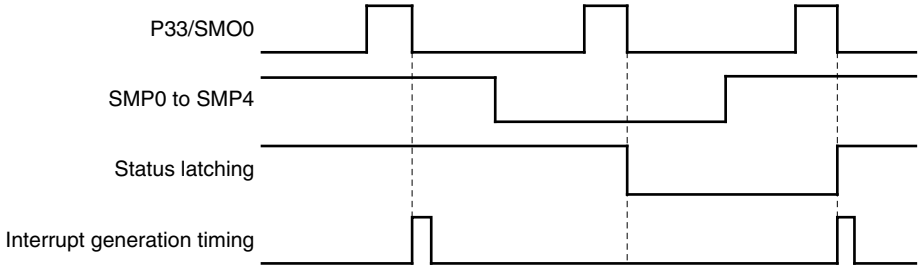

<When the active level of sampling input is low for interrupt generation>

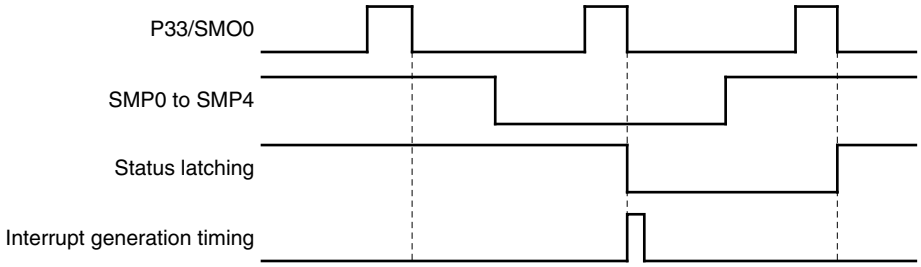

[Sampling detection 2]

<When the active level of sampling input is high for interrupt generation>

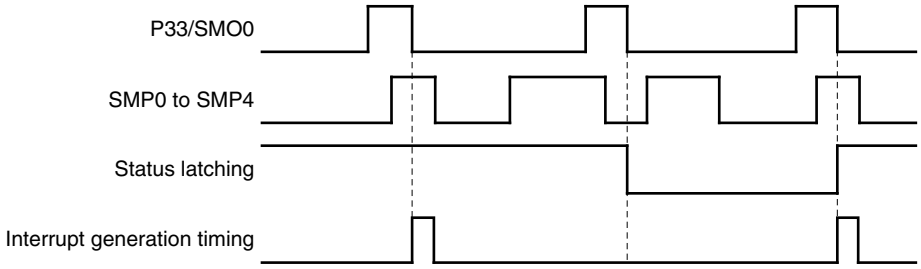

<When the active level of sampling input is low for interrupt generation>

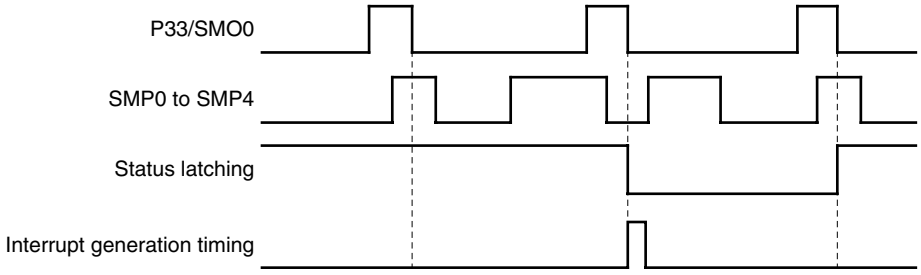

CHAPTER 12 MR SAMPLING FUNCTION

12.1 Outline of MR Sampling Function

This is a function that drives an MR sensor (magnetic sensor). After $\overline{\text{RESET}}$, this functions as a normal timer.

12.2 MR Sampling Function

The MR sampling function is a function used to drive an MR sensor (magnetic sensor).

The MR sampling function consists of two blocks, an MR sampling output circuit and a phase detector. It can be used as an 8-bit interval timer when the MR sampling function is not used.

Figure 12-1 shows the block diagram of the MR sampling function.

★ **Figure 12-1. Block Diagram of MR Sampling**

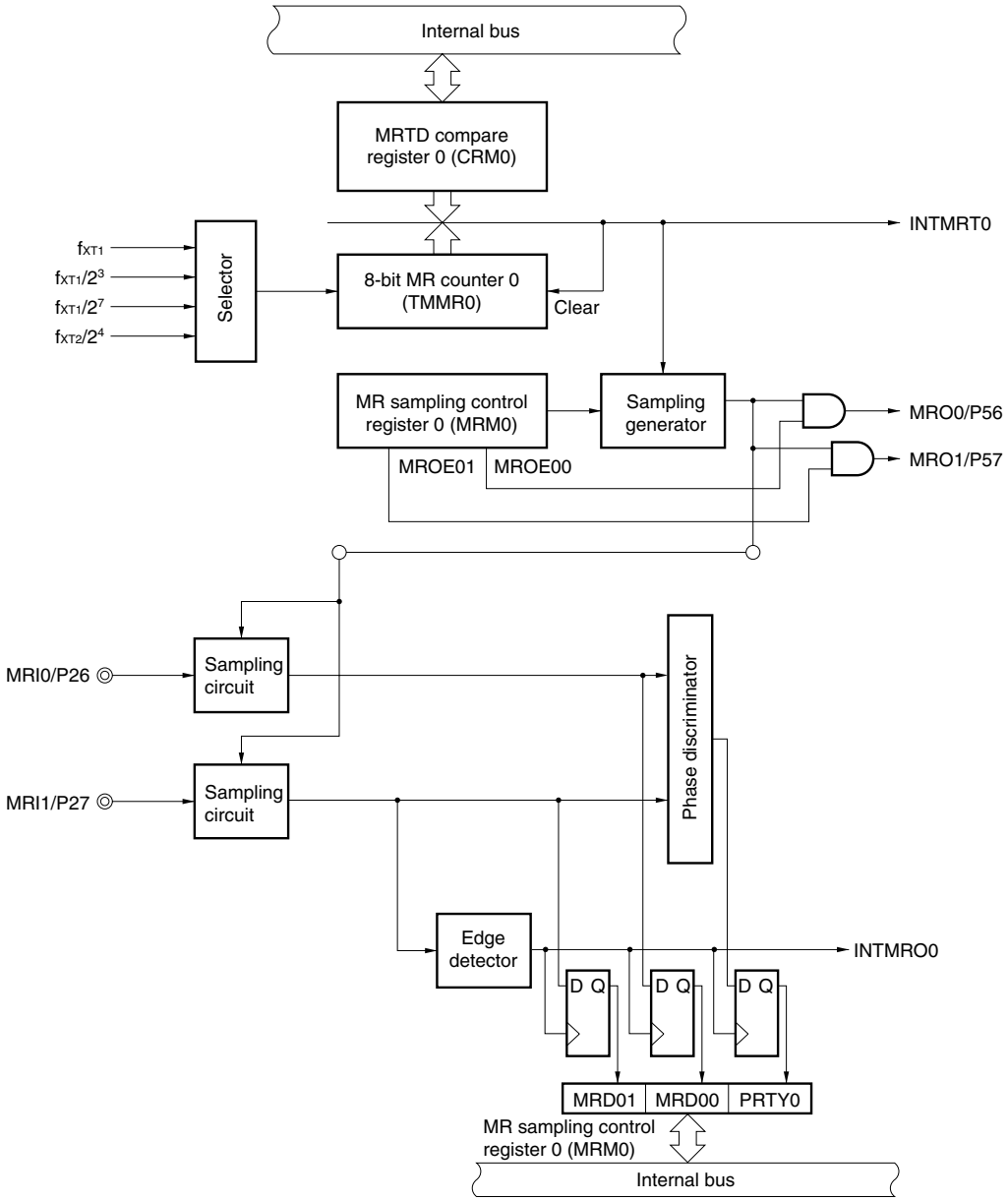

12.3 MR Sampling Configuration

The MR sampling function consists of the following hardware.

Table 12-1. Configuration of MR Sampling

Item	Configuration
★ Registers	8-bit MR counter 0 (TMMR0) MRTD compare register 0 (CRM0)
Control registers	MRTD control register 0 (TCM0) MRTD output control register 0 (TMM0) MR sampling control register 0 (MRM0)

★ **(1) 8-bit MR counter 0 (TMMR0)**

TMMR0 is an 8-bit counter that counts the count pulse.

The counter is incremented in synchronization with the rising edge of the count clock.

TMMR0 cannot be written or read, and the count value is cleared to 00H in the following cases.

<1> $\overline{\text{RESET}}$ input

<2> Bit 7 (TCEM0) of the MRTD control register 0 (TCM0) is reset to 0

<3> Match between TMMR0 and CRM0

(2) MRTD compare register 0 (CRM0)

The value set in CRM0 is constantly compared with the count value of 8-bit MR counter 0 (TMMR0). If they match, an interrupt request (INTMRT0) is generated.

CRM0 can be written and read in 8-bit units.

The value of CRM0 can be set within the range of 01H to FFH. Rewriting during a count operation is prohibited.

★ **Caution Setting 00H is prohibited.**

12.4 MR Sampling Control Registers

The following three registers are used to control the MR sampling function.

- MRTD control register 0 (TCM0)
- MRTD output control register 0 (TMM0)
- MR sampling control register 0 (MRM0)

(1) MRTD control register 0 (TCM0)

TCM0 is a register that controls the TMMR0 count operation, selects whether the 8-bit timer mode or the MR sampling output mode is used, and is also used to select the count clock of TMMR0.

TCM0 is set with a 1-bit or 8-bit memory manipulation instruction.

$\overline{\text{RESET}}$ input sets TCM0 to 00H.

Figure 12-2. Format of MRTD Control Register 0 (TCM0)

Address: FF79H After reset: 00H R/W

Symbol	7	6	5	4	3	2	1	0
TCM0	TCEM0	SLMR0	0	0	0	0	TCM01	TCM00

TCEM0	TMMR0 count operation control
0	Clears the TMMR0 counter to 0 and then stops the count operation (TMMR0 = 00H)
1	Enables TMMR0 count operation

SLMR0	8-bit timer/MR sampling output mode selection
0	8-bit timer mode
1	MR sampling output mode

TCM01	TCM00	TMMR0 count clock selection
0	0	f_{XT1} (30.5 μs)
0	1	$f_{XT1}/2^3$ (244 μs)
1	0	$f_{XT1}/2^7$ (3.9 ms)
1	1	$f_{XT2}/2^4$ (3.25 μs)Note

★ **Note** Can only be selected in the 8-bit timer mode.

Remarks 1. Figures in parentheses apply to operation with f_{XT1} = 32.768 kHz, f_{XT2} = 4.91 MHz.

2. f_{XT1}: Subsystem clock 1 oscillation frequency

f_{XT2}: Subsystem clock 2 oscillation frequency

(2) MRTD output control register 0 (TMM0)

★ TMM0 is a register that sets the status of the timer output flip-flop (F/F) in the 8-bit timer mode.

TMM0 is set with a 1-bit or 8-bit memory manipulation instruction.

$\overline{\text{RESET}}$ input sets TMM0 to 00H.

Figure 12-3. Format of MRTD Output Control Register 0 (TMM0)

Address: FF7AH After reset: 00H W

Symbol	7	6	5	4	3	2	1	0
TMM0	0	0	0	0	0	0	LVSM0	LVRM0

LVSM0	LVRM0	Timer output F/F status setting
0	0	No change
0	1	Resets timer output F/F to 0
1	0	Sets timer output F/F to 1
1	1	Setting prohibited

Remark TMM0 cannot be written during a TMMR0 count operation.

(3) MR sampling control register 0 (MRM0)

MRM0 is a register used to display the sampling state of signals input from the MR sensor and control the operation of MRO0/MRI0 and MRO1/MRI1. Bits 5 to 7 of MRM0 are read-only bits.

MRM0 is sets with a 1-bit or 8-bit memory manipulation instruction.

$\overline{\text{RESET}}$ input sets MRM0 to 00H.

★ **Figure 12-4. Format of MR Sampling Control Register 0 (MRM0)**

Address: FF7BH After reset: 00H R/W

Symbol	7	6	5	4	3	2	1	0
MRM0	MRD01	MRD00	PRTY0	0	CK01	CK00	MROE01	MROE00

MRD01	MRI1 internal shaped waveform level status flag
0	Low level
1	High level

MRD00	MRI0 internal shaped waveform level status flag at rising edge of MRI1 internal shaped waveform
0	MRI0 internal shaped waveform = Low level
1	MRI0 internal shaped waveform = High level

PRTY0	MRI0 internal shaped waveform level status flag at rising/falling edge of MRI1 internal shaped waveform
0	The MRI0 internal shaped waveform is high at the rising edge of the MRI1 internal shaped waveform or low at the falling edge of the MRI1 internal shaped waveform
1	The MRI0 internal shaped waveform is low at the rising edge of the MRI1 internal shaped waveform or high at the falling edge of the MRI1 internal shaped waveform

CK01	CK00	MRO1, MRO0 pins output clock pulse width setting
0	0	$2 \times f_{XT1}$ (15 μs)
0	1	f_{XT1} (30.5 μs)
1	0	$f_{XT1}/2$ (61 μs)
1	1	$f_{XT1}/2^5$ (977 μs)

MROE01	MRO1 pin output control flag
0	Disables output
1	Enables output

MROE00	MRO0 pin output control flag
0	Disables output
1	Enables output

Remarks 1. MRD01, MRD00, and PRTY0 are cleared in the 8-bit timer mode (bit 6 of MRTD control register 0 (TCM0) is 0).

2. Figures in parentheses apply to operation with f_{XT1} = 32.768 kHz (f_{XT1}: Subsystem clock 1 oscillation frequency).

12.5 MR Sampling Output Circuit Operations

(1) In 8-bit timer mode

- 8-bit MR counter 0 (TMMR0) operates as an 8-bit timer by setting bit 6 (SLMR0) of MRTD control register 0 (TCM0) to 0.
- The outputs of MRO0/MRO1 are inverted and output by an interrupt request (INTMRT0) that is generated on a match between MRTD compare register 0 (CRM0) and TMMR 0.

(2) MR sampling output mode

- 8-bit MR counter 0 (TMMR0) operates as an 8-bit interval timer, which is cleared if the value of this interval timer matches the MRTD compare register 0 (CRM0) value.
- The output cycle of the MRO0/MRO1 pins is determined by an interrupt request (INTMRT0) that is generated on a match between MRTD compare register 0 (CRM0) and TMMR0. The duty is set using bits 2 and 3 (CK00 and CK01) of MR sampling control register 0 (MRM0).

Figure 12-5 shows the timing charts of the MRO0/MRO1 outputs.

Figure 12-5. Timing Charts of MRO0/MRO1 Outputs

<In 8-bit timer mode>

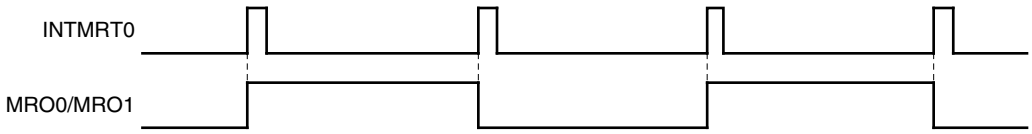

<In MR sampling output mode>

• When both CK01 and CK00 are 0

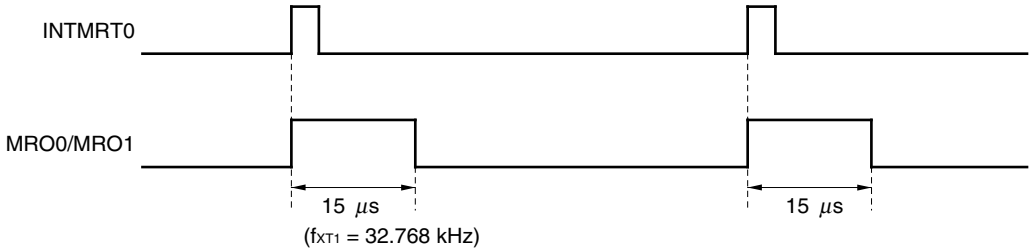

Remarks 1. The pulse width of MRO0/MRO1 is set using bits 2 and 3 (CK00 and CK01) of MRM0.

2. f_{XT1}: Subsystem clock 1 oscillation frequency

★ 12.6 Phase Detector Operation

- The MRI0/MRI1 input is latched to the sampling circuit at the falling edge of the MRO0/MRO1 clock and waveform shaping of the input signal is performed.
- An MRTD edge detection interrupt (INTMRO0) occurs at both the rising and falling edges of the MRI1 signal that has undergone waveform shaping internally.
  Occurrence of the INTMRO0 interrupt is delayed 15 μs in relation to the waveform-shaped MRI1 signal.
- Bit 7 (MRD01) of MR sampling control register 0 (MRM0) latches the level of the internally waveform-shaped MRI1 signal upon occurrence of the INTMRO0 interrupt, and this value is transferred to MRD01. MRD01 is set (to 1) when MRI1 is high level, and cleared (to 0) when MRI1 is low level.
- Bit 6 (MRD00) of MRM0 latches the level of the internally waveform-shaped MRI0 at both the falling and the rising edges of the internally waveform-shaped MRI1 signal, and this value is transferred to MRD00 upon occurrence of the INTMRO0 interrupt. MRD00 is set (to 1) when MRI0 is high level, and cleared (to 0) when MRI0 is low level.
- Bit 5 (PRTY0) of MRM0 is used to verify MRI0/MRI1 phase detection (normal/inverted). PRTY0 is cleared (to 0) (normal) when the waveform-shaped MRI0 signal is high level at the rising edge of the waveform-shaped MRI1 signal, or when MRI0 is low level at the falling edge of the MRI1 signal.
  On the other hand, PRTY0 is set (to 1) (inverted) when MRI0 is low level at the rising edge of MRI1, or when MRI0 is high level at the falling edge of MRI1.
- In the 8-bit timer mode, the phase detector does not operate.

Caution The INTMRO0 occurrence timing and the MRD00/MRD01, PRTY0 set/clear timing are always delayed 15 μs in relation to the MRI1 internal shaped waveform.

Figure 12-6 shows a timing example of the phase detector.

Figure 12-6. Timing Example of Phase Detector

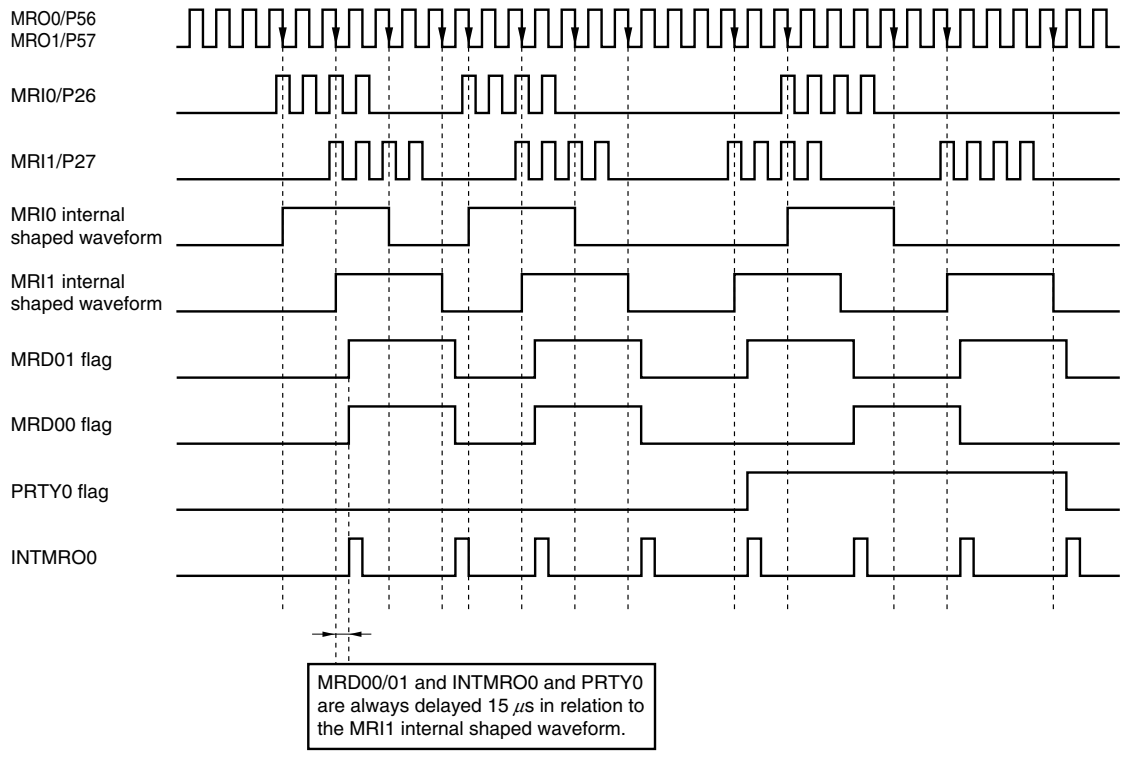

12.7 MR Sampling Function Operating Cautions

(1) MRI0 and MRI1 input waveforms

- When MRI0 and MRI1 change at the same time

  When the edges of MRI0 and MRI1 overlap, the value of the MRI0 internal shaped waveform level status flag is undefined.
- Change timing of INTMRO0 and each status flag

  INTMRO0 and the status flags (MRD00, MRD01, and PRTY0) change at the same timing.

(2) Register setting

- All flags must be set after the TMMR0 count operation control flag (TCEM0) is cleared to 0.

  (After all settings such as the timer mode/MR mode setting and MRO0/MRO1 pin output enable/disable setting are completed, the timer starts operation. To change the status flags, the timer must be stopped beforehand by clearing TCEM0 to 0.)

(3) Switching of MR sampling output mode and 8-bit timer mode

- Be sure to stop the timer operation (TCEM0 = 0) before switching the mode between MR sampling output mode and 8-bit timer mode.

(4) Waveform in MR sampling output mode

- MR sampling output should be set so that it is equal to or less than 1/2 the duty.

CHAPTER 13 CLOCK OUTPUT CONTROLLER

13.1 Clock Output Controller Functions

This circuit is used to output the clock to be supplied to the carrier output and to peripheral LSIs during a remote-control transmission. The clock is selected by the clock output selection register (CKS), and then output via the PCL/P34 pin.

Clock-pulse output is performed using the following procedure.

<1> Select the clock pulse output frequency using bits 0 to 3 (CCS0 to CCS3) of CKS (clock-pulse output disabled state).
<2> Set the output latch of P34 to 0.
<3> Set bit 4 (PM34) of port mode register 3 (PM3) to 0 (this sets the output mode).
<4> Set bit 4 (CLOE) of CKS to 1.

Caution Setting the output latch of P34 to 1 disables clock output.

Remark The clock output controller is designed so as not to output a narrow-width pulse when the clock output is switched between enabled and disabled.

13.2 Clock Output Controller Configuration

The clock output controller consists of the following hardware.

Table 13-1. Configuration of Clock Output Controller

Item	Configuration
Control registers	Clock output selection register (CKS) Port mode register 3 (PM3)

★ **Figure 13-1. Block Diagram of Clock Output Controller**

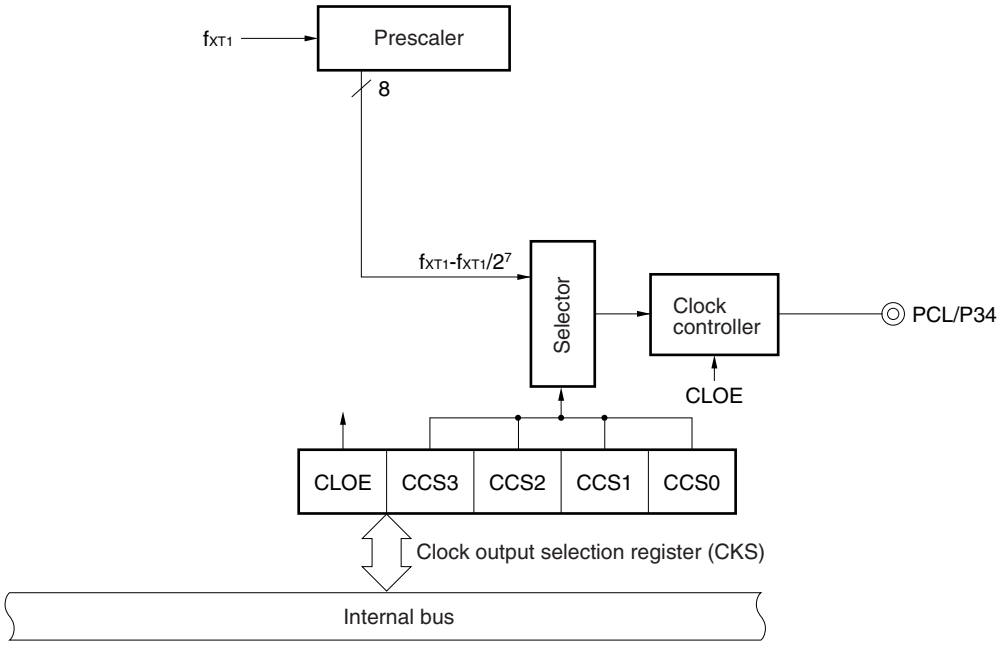

13.3 Clock Output Function Control Registers

The following two registers are used to control the clock output function.

- Clock output select register (CKS)
- Port mode register 3 (PM3)

(1) Clock output select register (CKS)

CKS is a register that specifies the PCL output clock.

CKS is set with a 1-bit or 8-bit memory manipulation instruction.

$\overline{\text{RESET}}$ input sets CKS to 00H.

Figure 13-2. Format of Clock Output Select Register (CKS)

Address: FF40H After reset: 00H R/W

Symbol	7	6	5	4	3	2	1	0
CKS	0	0	0	CLOE	CCS3	CCS2	CCS1	CCS0

CLOE	PCL output enable/disable specification
0	Stops clock division circuit operation, PCL is fixed to low.
1	Enables clock division circuit operation and PCL output

CCS3	CCS2	CCS1	CCS0	PCL output clock selection
0	0	0	0	f_{XT1} (32.768 kHz)
0	0	0	1	$f_{XT1}/2$ (16.384 kHz)
0	0	1	0	$f_{XT1}/2^2$ (8.192 kHz)
0	0	1	1	$f_{XT1}/2^3$ (4.096 kHz)
0	1	0	0	$f_{XT1}/2^4$ (2.048 kHz)
0	1	0	1	$f_{XT1}/2^5$ (1.024 kHz)
0	1	1	0	$f_{XT1}/2^6$ (512 Hz)
0	1	1	1	$f_{XT1}/2^7$ (256 Hz)
Other than above				Setting prohibited

Remark Figures in parentheses apply to operation with f_{XT1} = 32.768 kHz (f_{XT1}: Subsystem clock 1 oscillation frequency)

(2) Port mode register 3 (PM3)

This is a register that specifies input/output for port 3 in 1-bit units.

When the P34/PCL pin is used for the clock output function, the output latches of PM34 and P34 must be set to 0.

PM3 is set with a 1-bit or 8-bit memory manipulation instruction.

$\overline{\text{RESET}}$ input sets PM3 to FFH.

Figure 13-3. Format of Port Mode Register 3 (PM3)

Address: FF23H After reset: FFH R/W

Symbol	7	6	5	4	3	2	1	0
PM3	PM37	PM36	PM35	PM34	PM33	PM32	PM31	PM30

PM3n	P3n input/output mode selection (n = 0 to 7)
0	Output mode (output buffer is on)
1	Input mode (output buffer is off)

CHAPTER 14 SERIAL INTERFACE UART2

14.1 Functions of Serial Interface UART2

Serial interface UART2 has the following two modes.

(1) Operation stop mode

This mode is used when serial transfer is not performed. Power consumption can therefore be reduced in this mode.

(2) Asynchronous serial interface (UART) mode (with pin switching function)

In this mode, one byte of data starting with the start bit is transmitted/received, and full-duplex operation is possible.

A dedicated UART baud rate generator is incorporated, allowing communication over a wide range of baud rates.

The transfer data length can be selected from 5 bits, 7 bits, and 8 bits.

Positive logic/negative logic can be selected for both transmission and reception.

By using subsystem clock 1, transmission/reception is possible at a transfer rate of 200 bps and 300 bps. By using subsystem clock 2, transmission/reception is possible at a transfer rate of 1,200 bps and 2,400 bps.

Dual-system data I/O pins (RxD and TxD) are provided, and the pin to be used can be selected by software (time-division transfer function). For actual usage, however, only one system can be used at once.

Caution Pins not being used for pin switching can be used as port pins.

Figure 14-1 shows the block diagram of serial interface UART2.

Figure 14-1. Block Diagram of Serial Interface UART2

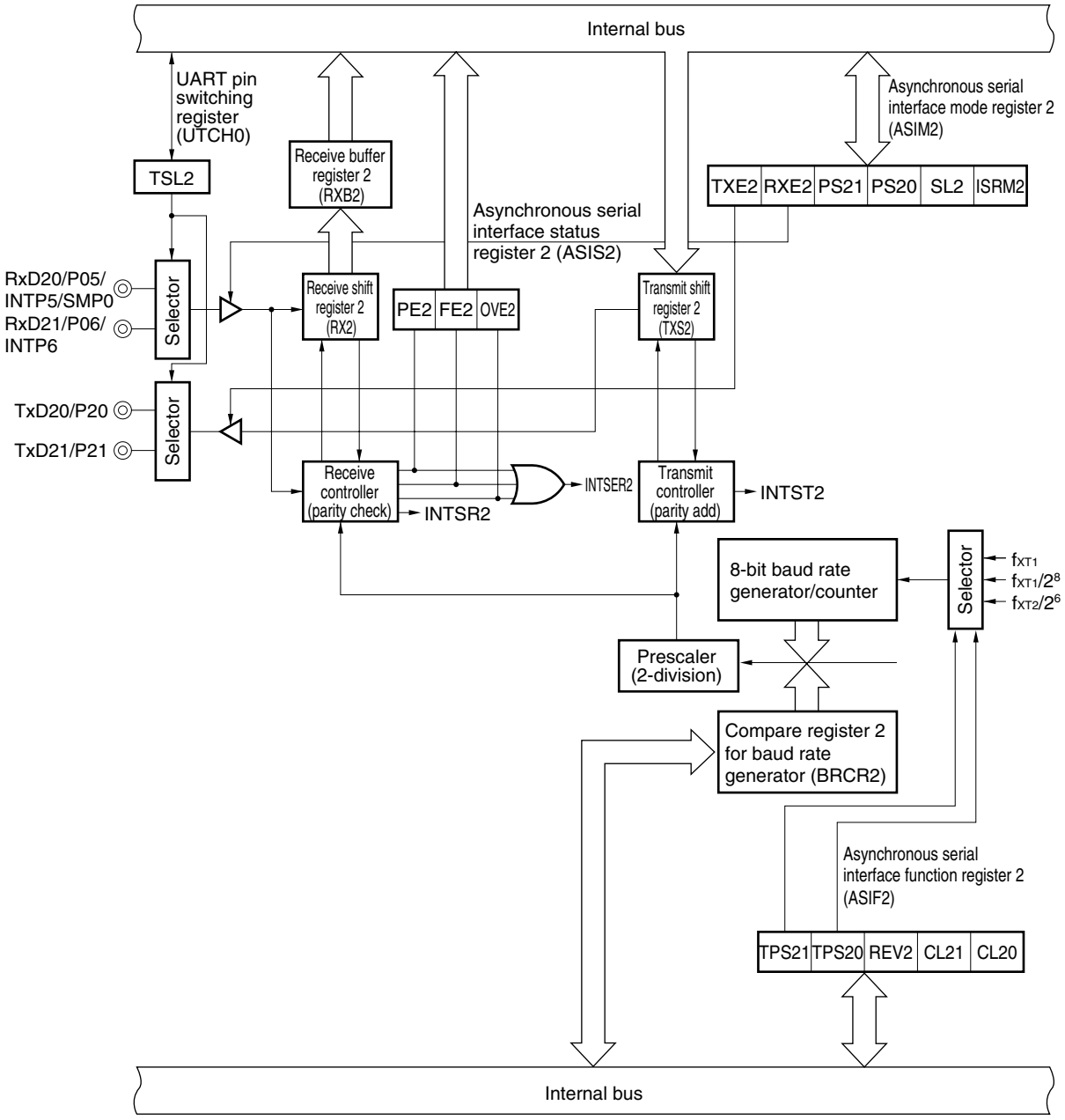

14.2 Configuration of Serial Interface UART2

Serial interface UART2 consists of the following hardware.

Table 14-1. Configuration of Serial Interface UART2

Item	Configuration
Registers	Transmit shift register 2 (TXS2) Receive shift register 2 (RX2) Receive buffer register 2 (RXB2)
Control registers	Asynchronous serial interface mode register 2 (ASIM2) Asynchronous serial interface status register 2 (ASIS2) Asynchronous serial interface function register 2 (ASIF2) Compare register 2 for baud rate generation (BRCR2) UART pin switching register (UTCH0)

(1) Transmit shift register 2 (TXS2)

This register is used to set the transmit data. The data written in TXS2 is transmitted as serial data.

If the data length is specified as 7 bits, bits 0 to 6 of the data written in TXS2 are transmitted as transmit data.

Writing data to TXS2 starts the transmit operation.

TXS2 is written with an 8-bit memory manipulation instruction. It cannot be read.

$\overline{\text{RESET}}$ input sets TXS2 to FFH.

Caution TSX2 must not be written to during a transmit operation.
TXS2 and receive buffer register 2 (RXB2) are allocated to the same address, and when a read is performed, the value of RXB2 is read.

(2) Receive shift register 2 (RX2)

This register is used to convert serial data input to the RxD20 and RxD21 pins into parallel data. When one byte of data is received, the receive data is transferred to receive buffer register 2 (RXB2).

RX2 cannot be directly manipulated by a program.

(3) Receive buffer register 2 (RXB2)

This register holds receive data. Each time one byte of data is received, new receive data is transferred from receive shift register 2 (RX2).

If the data length is specified as 7 bits, the receive data is transferred to bits 0 to 6 of RXB2, and the MSB (bit 7) of RXB2 is always set to 0.

RXB2 is read with an 8-bit memory manipulation instruction. It cannot be written to.

$\overline{\text{RESET}}$ input sets RXB2 to FFH.

Caution Be sure to read receive buffer register 2 (RXB2) even if a receive error occurs. Otherwise, an overrun error occurs when the next data is received, resulting in a receive-error state.

(4) Transmission controller

This circuit controls transmit operations such as the addition of a start bit, parity bit, and stop bit to data written in transmit shift register 2 (TXS2) in accordance with the contents set in asynchronous serial interface mode register 2 (ASIM2).

(5) Reception controller

This circuit controls receive operations in accordance with the contents set in asynchronous serial interface mode register 2 (ASIM2). It also performs error checks for parity errors, etc., during receive operations, and if an error is detected, sets a value in asynchronous serial interface status register 2 (ASIS2).

14.3 Control Registers of Serial Interface UART2

The following five registers are used to control serial interface UART2.

- Asynchronous serial interface mode register 2 (ASIM2)
- Asynchronous serial interface status register 2 (ASIS2)
- Asynchronous serial interface function register 2 (ASIF2)
- Compare register 2 for baud rate generation (BRCR2)
- UART pin switching register (UTCH0)

(1) Register setting

(a) Asynchronous serial interface mode register 2 (ASIM2)

This is an 8-bit register that controls the serial transfer operation of serial interface UART2.

ASIM2 is set with a 1-bit or 8-bit memory manipulation instruction.

$\overline{\text{RESET}}$ input sets ASIM2 to 00H.

Figure 14-2 shows the format of this register.

Caution Set the port mode register (PMxx) in the UART mode as shown below. Set each output latch of the port that is set to the output mode to 0.

- **For receive (when TSL2 = 0) Set P05 (RxD20) to input mode (PM05 = 1).**
  (when TSL2 = 1) Set P06 (RxD21) to input mode (PM06 = 1).
- **For transmit (when TSL2 = 0) Set P20 (TxD20) to output mode (PM20 = 0).**
  (when TSL2 = 1) Set P21 (TxD21) to output mode (PM21 = 0).
- **For transmit and receive**
  (when TSL2 = 0) Set P05 (RxD20) to input mode (PM05 = 1).
  Set P20 (TxD20) to output mode (PM20 = 0).
  (when TSL2 = 1) Set P06 (RxD21) to input mode (PM06 = 1).
  Set P21 (TxD21) to output mode (PM21 = 0).

Remark TSL2: Bit 0 of the UART pin switching register (UTCH0)

Figure 14-2. Format of Asynchronous Serial Interface Mode Register 2 (ASIM2)

Address: FFA0H After reset: 00H R/W

Symbol	7	6	5	4	3	2	1	0
ASIM2	TXE2	RXE2	PS21	PS20	SL2	ISRM2	0	0

n = 0 or 1

TXE2	RXE2	Operation mode	Function of RxD2n/P×× pin	Function of TxD2n/P×× pin
0	0	Operation stops	Port function	Port function
0	1	UART mode (receive only)	Serial function	
1	0	UART mode (transmit only)	Port function	Serial function
1	1	UART mode (transmit/receive)	Serial function	

PS21	PS20	Parity bit operation
0	0	No parity
0	1	Transmission: 0 parity Reception: Parity error not generated
1	0	Odd parity
1	1	Even parity

SL2	Transmit data stop bit length specification
0	1 bit
1	2 bits

ISRM2	Reception end interrupt request control upon occurrence of error
0	Generates reception end interrupt request on occurrence of error.
1	Does not generate reception end interrupt request on occurrence of error.

Caution Be sure to stop serial transmission/reception before changing the operation mode.

(b) Asynchronous serial interface status register 2 (ASIS2)

This register indicates the error contents when a receive error occurs in the UART mode.

ASIS2 can be read with a 1-bit or 8-bit memory manipulation instruction.

$\overline{\text{RESET}}$ input sets ASIS2 to 00H.

Figure 14-3. Format of Asynchronous Serial Interface Status Register 2 (ASIS2)

Address: FFA2H After reset: 00H R

Symbol	7	6	5	4	3	2	1	0
ASIS2	0	0	0	0	0	PE2 Note 1	FE2 Note 2	OVE2 Note 3

PE2	Parity error flag
0	Parity error did not occur.
1	Parity error occurred (specified parity of transmit data does not match receive data parity).

FE2	Framing error flag
0	Framing error did not occur.
1	Framing error occurred (when stop bit is not detected).

OVE2	Overrun error flag
0	Overrun error did not occur.
1	Overrun error occurred (when next receive is completed before data is read from receive buffer register).

Notes 1. The parity error flag is cleared to 0 when the next parity bit is received completely.

2. Even if the stop bit length is set to 2 bits by using bit 3 (SL2) of asynchronous serial interface mode register 2 (ASIM2), only 1 stop bit is detected during reception.

3. The contents of the receive shift register 2 (RX2) are transferred to receive buffer register 2 (RXB2) every time one-character reception is completed. Therefore, since the next data is overwritten to RXB2 when an overrun error occurs, the next received data will be read out if reading RXB2. If an overrun error occurs, be sure to read RXB2. Until RXB2 is read, an overrun error persistently occurs each time data is received.

(c) Asynchronous serial interface function register 2 (ASIF2)

In the UART mode, this register selects the input clock for baud rate generator/counter, changes the transfer data length, and specifies positive logic and negative logic for both the transmit and receive signals.

ASIF2 is set with a 1-bit or 8-bit memory manipulation instruction.

$\overline{\text{RESET}}$ input sets ASIF2 to 00H.

Figure 14-4. Format of Asynchronous Serial Interface Function Register 2 (ASIF2)

Address: FFA1H After reset: 00H R/W

Symbol	7	6	5	4	3	2	1	0
ASIF2	0	0	TPS21	TPS20	0	REV2	CL21	CL20

TPS21	TPS20	Baud rate generator/counter input clock selection
0	0	f_{XT1} (30.5 μs)
0	1	$f_{XT1}/2^8$ (7.8 ms)
1	0	$f_{XT2}/2^6$ (13.0 μs)
1	1	Setting prohibited

REV2	Positive logic/negative logic specification for transmit/receive signals
0	Positive logic
1	Negative logic

CL21	CL20	Data character length specification
0	0	7 bits
0	1	8 bits
1	0	5 bits
1	1	

Cautions 1. Be sure to stop serial transmission/reception before changing the operation mode.

2. Be sure to stop serial transmission/reception before changing the count clock of the baud rate generator/counter. (If the count clock is changed during serial transmission/reception, the baud rate to be generated will be disturbed and communication will be abnormal.)

3. When negative logic is specified for a transmit/receive signal (by setting bit 2 (REV2) of asynchronous serial interface function register 2 (ASIF2) to 1), the start bit, stop bit, and data are transferred after being inverted. The parity should be set as "No parity".

Remarks 1. Figures in parentheses apply to operation with f_{XT1} = 32.768 kHz, f_{XT2} = 4.91 MHz.

2. f_{XT1}: Subsystem clock 1 oscillation frequency

f_{XT2}: Subsystem clock 2 oscillation frequency

(d) Compare register 2 for baud rate generation (BRCR2)

This register is an 8-bit compare register that generates the baud rate in the UART mode.

BRCR2 is set with an 8-bit memory manipulation instruction.

$\overline{\text{RESET}}$ input sets BRCR2 to 00H.

Cautions 1. Be sure to stop serial transmission/reception before writing to BRCR2. (If BRCR2 is written to during serial transmission/reception, the baud rate to be generated will be disturbed and communication will be abnormal.)

2. Be sure to set BRCR2 to a value other than between 00H to 07H or other than FFH.

(e) UART pin switching register (UTCH0)

UTCH0 has a function that switches the operation of the UART data input/output pin according to a division of time (time-division switching function).

UTCH0 is set with a 1-bit or 8-bit memory manipulation instruction.

$\overline{\text{RESET}}$ input sets UTCH0 to 00H.

Figure 14-5. Format of UART Pin Switching Register (UTCH0)

Address: FFA4H After reset: 00H R/W

Symbol	7	6	5	4	3	2	1	0
UTCH0	0	0	0	0	0	0	0	TSL2

TSL2	Pin switching function
0	Selects TxD20 and RxD20
1	Selects TxD21 and RxD21

Cautions 1. The combination of RxD20 and TxD21 or RxD21 and TxD20 cannot be selected.

2. Be sure to stop serial transmission/reception before switching the pin operation.

Remark Pins that are switched so that they do not function as UART data input/output pins can be used as I/O port pins.

The transfer baud rate to be generated is determined by the input clock supplied to the baud rate generator/counter and the value set in compare register 2 for baud rate generation (BRCR2).

The transmit/receive clock is generated by dividing subsystem clock 1 or 2.

The baud rate generated from subsystem clock 1 or 2 is obtained using the expression below.

$$[\text{Baud rate}] = \frac{f_{SCLK}}{2 \times k}$$

$$[\text{Error (\%)}] = \frac{\text{Actual baud rate (including an error with respect to the theoretic value)}}{\text{Expected transfer baud rate}} \times 100 - 100$$

f_{SCLK}: Input selection clock frequency of the baud rate generator/counter. This is selected using bits 4 and 5 (TPS20 and TPS21) of asynchronous serial interface function register 2 (ASIF2).

k: BRCR2 set value ($7 < k \leq 254$)

Table 14-2 shows an example of the relationship between the input selection clock of the baud rate generator/counter and the baud rate.

Table 14-2. Example of Relationship Between Baud Rate Generator/Counter Input Selection Clock and Baud Rate

Baud Rate [bps]	When $f_{SCLK} = f_{XT1}$ Is Selected		When $f_{SCLK} = f_{XT2}/2^6$ Is Selected	
	BRCR2 Set Value	Error (%)	BRCR2 Set Value	Error (%)
200	52H	−0.098	C0H	−0.106
300	37H	−0.703	80H	−0.106
600	1BH	1.136	40H	−0.106
1,200	0EH	−2.476	20H	−0.106
2,400	−	−	10H	−0.106
4,800	−	−	08H	−0.106

Remark f_{XT1}: Subsystem clock 1 (@ 32.768 kHz operation)
f_{XT2}: Subsystem clock 2 (@ 4.91 MHz operation)
BRCR2: Compare register 2 for baud rate generation

(2) Communication operation

(a) Data format

Figure 14-6 shows the transmit/receive data format.

Figure 14-6. Format of Asynchronous Serial Interface Transmit/Receive Data (Positive Logic)

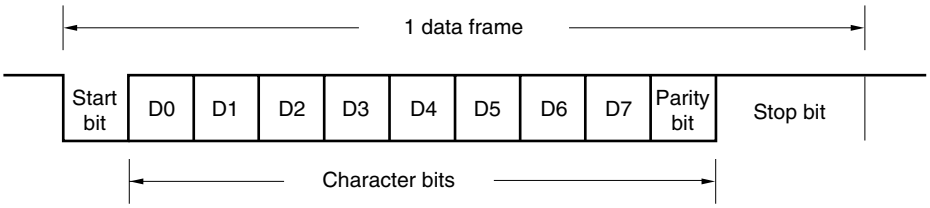

Caution When negative logic is specified for a transmit/receive signal (by setting bit 2 (REV2) of asynchronous serial interface function register 2 (ASIF2) to 1), the start bit, stop bit, and data are transferred after being inverted. The parity should be set as "No parity".

One data frame consists of the following bits:

- Start bit····· 1 bit
- Character bits ···· 5/7/8 bits
- Parity bits····· Even parity/odd parity/0 parity/no parity
- Stop bit(s)····· 1 bit/2 bits

The character bit length of one-data frame and whether positive logic or negative logic is selected are specified by ASIF2.

The selection of the parity bit and length of the stop bit for each data frame is specified by asynchronous serial interface mode register 2 (ASIM2).

When 7 bits are selected as the number of character bits, only the lower 7 bits (bits 0 to 6) are valid. In transmission, the most significant bit (bit 7) is ignored, and in reception, it is always "1".

When 5 bits are selected as the number of character bits, only the lower 5 bits (bits 0 to 4) are valid. In transmission, the higher 3 bits (bits 5 to 7) are ignored, and in reception, they are always "1".

The serial transfer rate is selected by ASIF2 and compare register 2 for baud rate generation (BRCR2).

If a serial data receive error occurs, the receive-error contents can be determined by reading the status of asynchronous serial interface status register 2 (ASIS2).

(b) Parity types and operation

The parity bit is used to detect a bit error in the communication data. Normally, the same kind of parity bit is used on the transmitting side and the receiving side. With even parity and odd parity, a “1” bit (odd number) error can be detected. With 0 parity and no parity, an error cannot be detected.

Caution When negative logic is selected for a transmit/receive signal, this bit must be set as “No parity”.

(i) Even parity

- Transmission

  The number of bits with a value of 1, including the parity bit, in the transmit data is controlled to be even. The value of the parity bit is as follows:

  Number of bits with a value of 1 in transmit data is odd: 1
  Number of bits with a value of 1 in transmit data is even: 0

- Reception

  The number of bits with a value of "1", including the parity bit, in the receive data is counted. If it is odd, a parity error occurs.

(ii) Odd parity

- Transmission

  Conversely to the situation with even parity, the number of bits with a value of 1, including the parity bit, in the transmit data is controlled to be odd. The value of the parity bit is as follows:

  Number of bits with a value of 1 in transmit data is odd: 0
  Number of bits with a value of 1 in transmit data is even: 1

- Reception

  The number of bits with a value of 1, including the parity bit, in the receive data is counted. If it is even, a parity error occurs.

(iii) 0 parity

When transmitting, the parity bit is set to 0 irrespective of the transmit data.

At reception, no parity bit check is performed. Therefore, no parity error occurs, irrespective of whether the parity bit is set to 0 or 1.

(iv) No parity

No parity bit is added to the transmit data.

At reception, data is received assuming that there is no parity bit. Since there is no parity bit, no parity error occurs.

(c) Transmission

A transmit operation is started by writing transmit data to the transmit shift register (TXS2). The start bit, parity bit, and stop bit(s) are added automatically.

When the transmit operation starts, the data in TXS2 is shifted out, and when TXS2 becomes empty, a transmission completion interrupt request (INTST2) is generated.

Figure 14-7 shows the generation timing of the transmission completion interrupt request.

★ **Figure 14-7. Generation Timing of Asynchronous Serial Interface Transmission Completion Interrupt Request**

(i) Stop bit length: 1

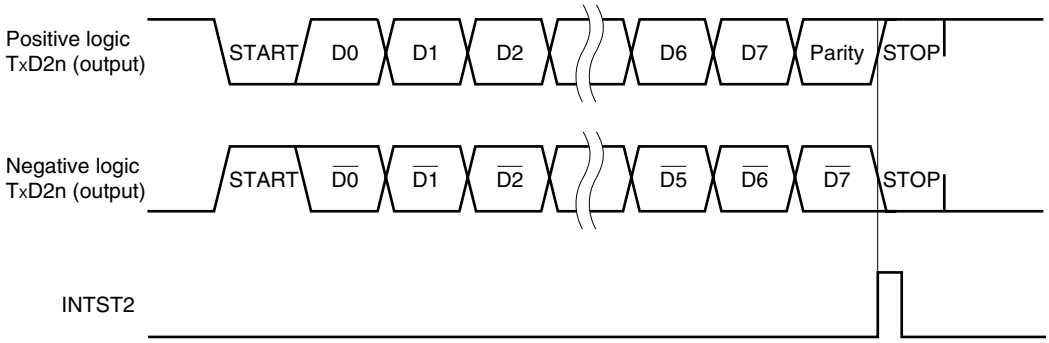

(ii) Stop bit length: 2

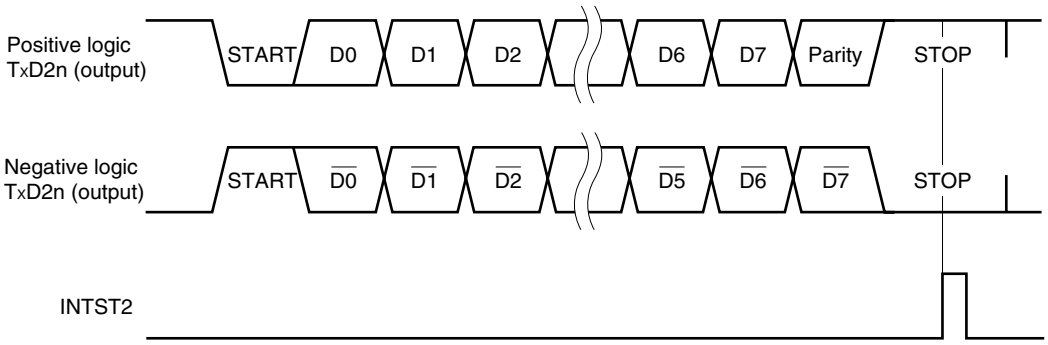

Cautions 1. Writing to asynchronous serial interface mode register 2 (ASIM2), asynchronous serial interface function register 2 (ASIF2), and compare register 2 for baud rate generation (BRCR2) should not be performed during a transmit operation. If these registers are written to during transmission, subsequent transmit operations may not be performed normally (the normal state is restored by $\overline{\text{RESET}}$ input).

It is possible to determine whether transmission is in progress by means of software using a transmission completion interrupt request (INTST2) or the interrupt request flag (STIF2) set by INTST2.

2. To select TxD21 and RxD21, set bit 0 (TSL2) of the UART pin switching register (UTCH0) to 1 (TxD20 and RxD20 are selected by default).

3. Following $\overline{\text{RESET}}$ input, TXS2 becomes empty, but a transmission completion interrupt (INTST2) is not output. At this time, transmission is started by writing transmit data to TXS2. Do not write data to the TXS2 register during transmission.

Remark n = 0, 1

(d) Reception

When bit 6 (RXE2) of asynchronous serial interface mode register 2 (ASIM2) is set to 1, a receive operation is enabled and sampling of the RxD2n pin input is performed.

RxD2n pin input sampling is performed using the serial clock specified by asynchronous serial interface function register 2 (ASIF2).

When the RxD2n pin input becomes low[Note], the 5-bit counter of the baud rate generator starts counting, and when half the time determined by the specified baud rate has passed, the data sampling start timing signal is output. If the RxD2n pin input is sampled again by this start timing signal and the result is low[Note], it is identified as a start bit, the 8-bit counter is initialized and starts counting, and data sampling is performed. When character data, a parity bit, and one stop bit are detected after the start bit, reception of one frame of data ends.

When one frame of data has been received, the receive data in the shift register is transferred to receive buffer register 2 (RXB2), and a reception completion interrupt request (INTSR2) is generated.

Even if an error occurs, the receive data in which the error occurred is still transferred to RXB2. INTSR2 is generated if bit 2 (ISRM2) of ASIM2 is cleared to 0 upon occurrence of the error (see **Figure 14-9**). If the ISRM2 bit is set to 1, INTSR2 is not generated.

If the RXE2 bit is reset to 0 during the receive operation, the receive operation is stopped immediately. In this case, the contents of RXB2 and ASIS2 are not changed, and INTSR2 is not generated.

Figure 14-8 shows the asynchronous serial interface reception completion interrupt request generation timing.

★ **Note** Positive logic: Low level; Negative logic: High level

★ **Figure 14-8. Generation Timing of Asynchronous Serial Interface Reception Completion Interrupt Request**

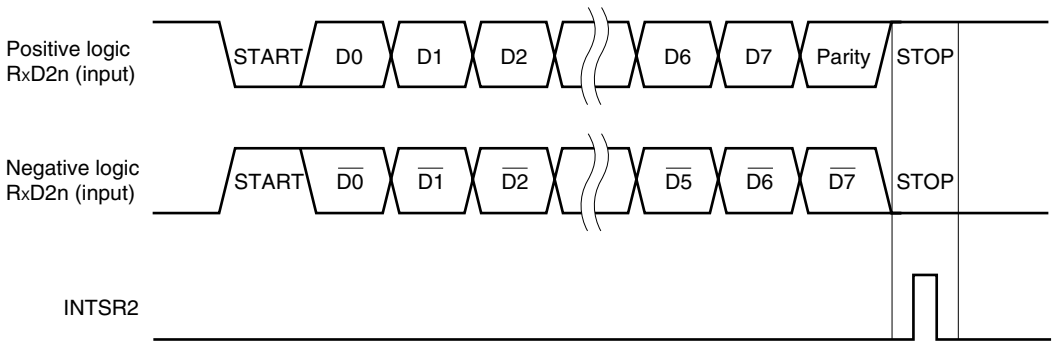

Cautions 1. Receive buffer register 2 (RXB2) must be read even if a receive error occurs. If RXB2 is not read, an overrun error will occur when the next data is received, and the receive-error state will continue indefinitely.

2. To select TxD21 and RxD21, set bit 0 (TSL2) of the UART pin switching register (UTCH0) to 1 (TxD20 and RxD20 are selected by default).

Remark n = 0, 1

(e) Receive errors

Three types of errors can be generated during a receive operation: a parity error, a framing error, and an overrun error. If, as the result of data reception, an error flag is set in asynchronous serial interface status register 2 (ASIS2), a receive-error interrupt request (INTSER2) is generated. Tables 14-3 shows the receive-error causes. The receive-error interrupt request (INTSER2) is generated before the receive-complete interrupt request (INTSR2).

Reading the contents of ASIS2 during receive-error interrupt servicing (INTSER2) allows detection of what error has been generated during reception (see **Table 14-3** and **Figure 14-9**).

The contents of ASIS2 are reset to 0 by reading receive buffer register 2 (RXB2) or receiving the next data (if there is an error in the next data, the corresponding error flag is set).

Table 14-3. Receive Error Causes

Receive Error	Cause	ASIS2 Value
Parity error	The parity specified at transmission and the parity of the receive data do not match.	04H
Framing error	No stop bit detected	02H
Overrun error	Reception of next data is completed before data is read from receive buffer register 2 (RXB2).	01H

★ **Figure 14-9. Receive Error Timing**

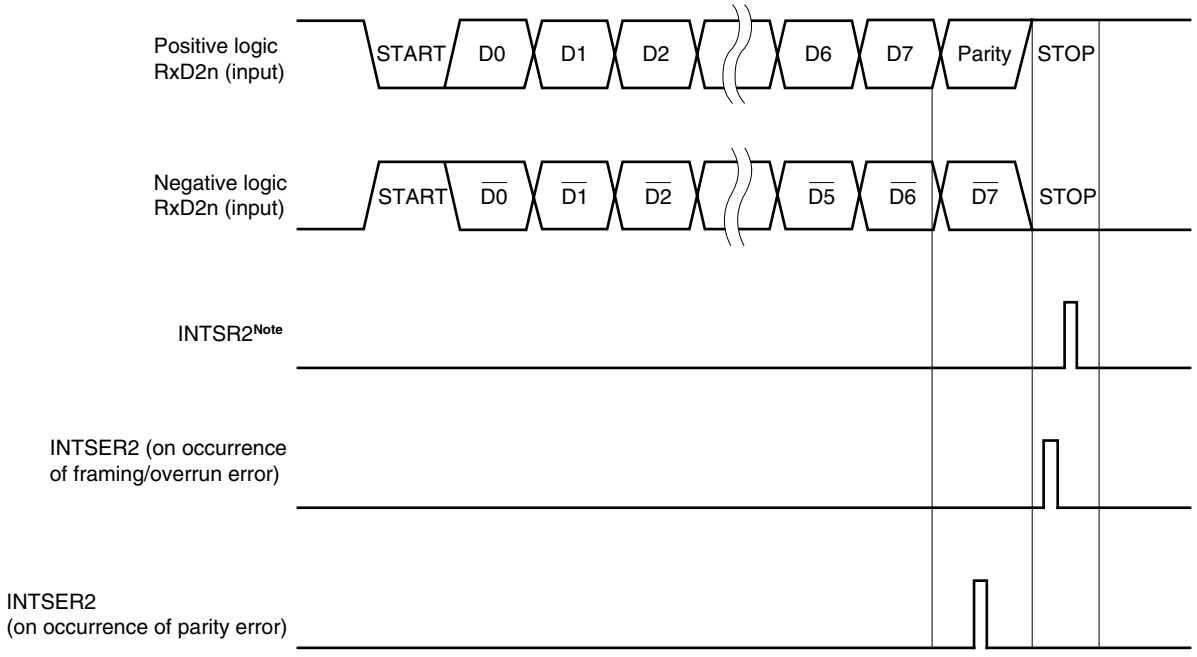

Note INTSR2 is not generated if a receive error occurs when bit 2 (ISRM2) of asynchronous serial interface mode register 2 (ASIM2) is set to 1.

Cautions 1. The contents of ASIS2 are reset to 0 by reading RXB2 or receiving the next data. To ascertain the error contents, ASIS2 must be read before reading RXB2.

2. RXB2 must be read even if a receive error occurs. If RXB2 is not read, an overrun error occurs when the next data is received, and the receive-error state will continue indefinitely.

3. To select TxD21 and RxD21, set bit 0 (TSL2) of the UART pin switching register (UTCH0) to 1 (TxD20 and RxD20 are selected by default).

Remark n = 0, 1

★ **(f) Clearing of RXE2 during UART2 reception**

There are three timings at which RXE2 is cleared to 0 during UART2 reception (before occurrence of receive interrupt INTSR2), as shown in <1> to <3> in Figure 14-10.

Figure 14-10. Timing for Clearing RXE2 (to 0) (During UART2 Reception)

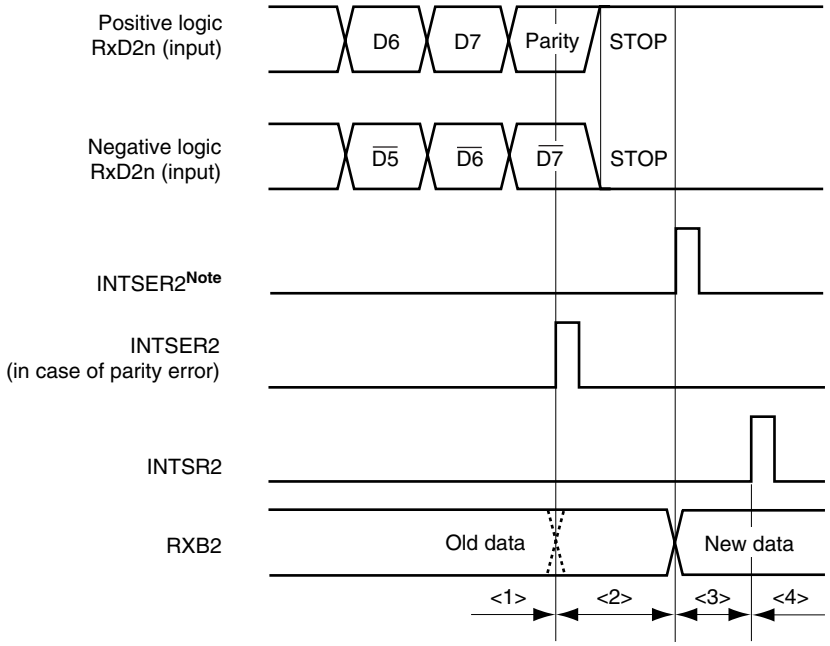

Remark n = 0, 1

Clear Timing (RXE2 = 0)	INTSER2Note	INTSR2	RXB2
<1>	Not generated	Not generated	Old data
<2>	Not generated (Generated in case of parity error)	Not generated	Old data (New data in case of parity error)
<3>	Generated	Not generated	New data
<4>	Generated	Generated	New data

Note The receive data interrupt (INTSER2) is generated only when a receive error has occurred. Therefore, INTSER2 may not be generated even if the RXB2 value is updated at the clear timing (<2> above).

CHAPTER 15 SERIAL INTERFACE SIO3

15.1 Functions of Serial Interface SIO3

Serial interface SIO3 has the following two modes.

(1) Operation stop mode

This mode is used when serial transfer is not performed. For details, see **15.4.1 Operation stop mode**.

(2) 3-wire serial I/O mode (fixed to MSB first)

This is an 8-bit data transfer mode using three lines: serial clock 3 ($\overline{SCK3}$), a serial output line (SO3), and a serial input line (SI3).

Since transmit and receive operations can be performed simultaneously in the 3-wire serial I/O mode, the processing time for data transfers is reduced.

The first bit of 8-bit serial transfer data is fixed as the MSB.

The 3-wire serial I/O mode is useful when connecting to devices such as peripheral I/Os and display controllers, which incorporate a clocked serial interface. For details, see **15.4.2 3-wire serial I/O mode**.

Figure 15-1 shows the block diagram of serial interface SIO3.

Figure 15-1. Block Diagram of Serial Interface SIO3

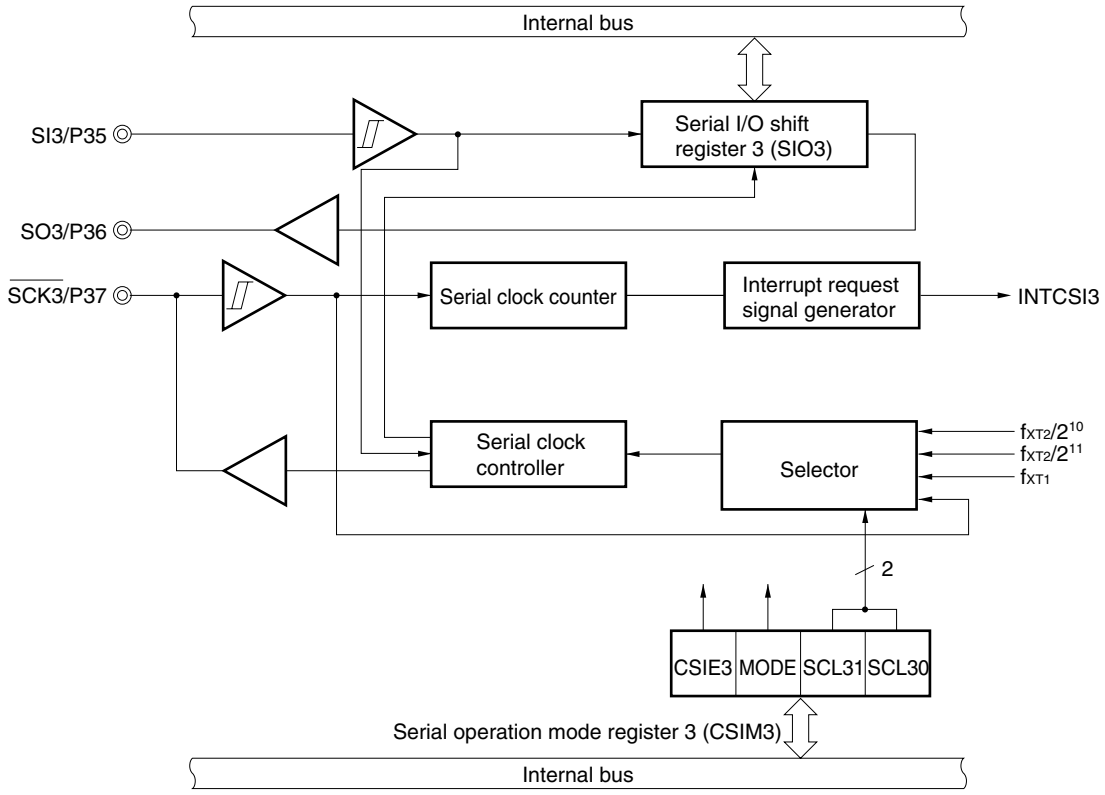

15.2 Configuration of Serial Interface SIO3

Serial interface SIO3 consists of the following hardware.

Table 15-1. Configuration of Serial Interface SIO3

Item	Configuration
Register	Serial I/O shift register 3 (SIO3)
★ Control register	Serial operation mode register 3 (CSIM3)

(1) Serial I/O shift register 3 (SIO3)

This is an 8-bit register that performs parallel-serial conversion and serial transmit-receive operations (shift operations) in synchronization with the serial clock.

SIO3 is set by an 8-bit memory manipulation instruction.

When bit 7 (CSIE3) of serial operation mode register 3 (CSIM3) is set to 1, a serial operation can be started by writing data to or reading data from SIO3.

When transmitting, data written to SIO3 is output to the serial output (SO3).

When receiving, data is read from the serial input (SI3) and written to SIO3.

★ $\overline{\text{RESET}}$ input makes SIO3 undefined.

Caution Do not access SIO3 during a transfer operation unless the access is a transfer-start trigger (read operations are disabled when MODE = 0 and write operations are disabled when MODE = 1).

15.3 Control Registers of Serial Interface SIO3

Serial interface SIO3 is controlled by serial operation mode register 3 (CSIM3).

★ **(1) Serial operation mode register 3 (CSIM3)**

This register is used to set the SIO3 interface's serial clock, operation mode, and operation enable/disable.

CSIM3 can be set with a 1-bit or 8-bit memory manipulation instruction.

$\overline{\text{RESET}}$ input sets CSIM3 to 00H.

Caution When using the 3-wire serial I/O mode, set port mode register 3 (PM3x) as shown below. Also, set the output latches of the ports set to output mode to 0.

- **For serial clock output (master transmit/receive)**
  Set P37 ($\overline{\text{SCK3}}$) to the output mode (PM37 = 0).
- **For serial clock input (slave transmit/receive)**
  Set P37 to the input mode (PM37 = 1).
- **For transmit/transmit and receive mode**
  Set P36 (SO3) to the output mode (PM36 = 0).
  (Set P35 (SI3) to the input mode (PM35 = 1) (in transmit/receive mode).
- **For receive mode**
  Set P35 (SI3) to the input mode (PM35 = 1).

Figure 15-2. Format of Serial Operation Mode Register 3 (CSIM3)

Address: FFB0H After reset: 00H R/W

Symbol	7	6	5	4	3	2	1	0
CSIM3	CSIE3	0	0	0	0	MODE	SCL31	SCL30

CSIE3	SIO3 operation enable/disable specification Shift register operation
0	Disables operation
1	Enables operation

MODE	Transfer operation mode flag Operation mode
0	Transmit/transmit and receive mode
1	Receive-only mode

SCL31	SCL30	Clock selection
0	0	Input clock from external
0	1	$f_{XT2}/2^{10}$ (209 μs)
1	0	$f_{XT2}/2^{11}$ (417 μs)
1	1	f_{XT1} (30.5 μs)

Caution Be sure to set bits 3 to 6 to 0.

Remarks 1. Figures in parentheses apply to operation with f_{XT1} = 32.768 kHz, f_{XT2} = 4.91 MHz

2. f_{XT1}: Subsystem clock 1 oscillation frequency

f_{XT2}: Subsystem clock 2 oscillation frequency

15.4 Operations of Serial Interface SIO3

This section explains the two modes of serial interface SIO3.

15.4.1 Operation stop mode

Since serial transfer is not performed in this mode, the power consumption can be reduced.

In addition, in this mode, the P37/$\overline{SCK3}$, P36/SO3, and P35/SI3 pins can be used as ordinary I/O port pins.

(1) Register settings

The operation stop mode is set by serial operation mode register 3 (CSIM3).

CSIM3 is set with a 1-bit or 8-bit memory manipulation instruction.

$\overline{RESET}$ input sets CSIM3 to 00H.

Figure 15-3. Format of Serial Operation Mode Register 3 (CSIM3) (Operation Stop Mode)

Address: FFB0H After reset: 00H R/W

Symbol	7	6	5	4	3	2	1	0
CSIM3	CSIE3	0	0	0	0	MODE	SCL31	SCL30

CSIE3	SIO3 operation enable/disable specification Shift register operation
0	Disables operation
1	Enables operation

Caution Be sure to set bits 3 to 6 to 0.

15.4.2 3-wire serial I/O mode

The 3-wire serial I/O mode is useful when connecting to devices such as peripheral I/Os and display controllers, which incorporate a clocked serial interface.

This mode executes data transfer via three lines: serial clock 3 ($\overline{SCK3}$), a serial output line (SO3), and a serial input line (SI3).

(1) Register settings

The 3-wire serial I/O mode is set by serial operation mode register 3 (CSIM3).

CSIM3 can be set by a 1-bit or 8-bit memory manipulation instruction.

$\overline{\text{RESET}}$ input sets CSIM3 to 00H.

Caution When using the 3-wire serial I/O mode, set port mode register 3 (PM3x) as shown below. Also, set the output latches of the ports set to output mode to 0.

- **For serial clock output (master transmit/receive)**
  Set P37 ($\overline{\text{SCK3}}$) to the output mode (PM37 = 0).
- **For serial clock input (slave transmit/receive)**
  Set P37 to the input mode (PM37 = 1).
- **For transmit/transmit and receive mode**
  Set P36 (SO3) to the output mode (PM36 = 0).
  (Set P35 (SI3) to the input mode (PM35 = 1) (in transmit/receive mode).
- **For receive mode**
  Set P35 (SI3) to the input mode (PM35 = 1).

Figure 15-4. Format of Serial Operation Mode Register 3 (CSIM3) (3-Wire Serial I/O Mode)

Address: FFB0H After reset: 00H R/W

Symbol	7	6	5	4	3	2	1	0
CSIM3	CSIE3	0	0	0	0	MODE	SCL31	SCL30

CSIE3	SIO3 operation enable/disable specification Shift register operation
0	Disables operation
1	Enables operation

MODE	Transfer operation mode flag Operation mode
0	Transmit/transmit and receive mode
1	Receive-only mode

SCL31	SCL30	Clock selection
0	0	Input clock from external
0	1	$f_{XT2}/2^{10}$ (209 μs)
1	0	$f_{XT2}/2^{11}$ (417 μs)
1	1	f_{XT1} (30.5 μs)

Caution Be sure to set bits 3 to 6 to 0.

Remarks 1. Figures in parentheses apply to operation with f_{XT1} = 32.768 kHz, f_{XT2} = 4.91 MHz

2. f_{XT1}: Subsystem clock 1 oscillation frequency

f_{XT2}: Subsystem clock 2 oscillation frequency

(2) Communication operations

In the 3-wire serial I/O mode, data is transmitted and received in 8-bit units. Each bit of data is transmitted or received in synchronization with the serial clock.

Serial I/O shift register 3 (SIO3) is shifted in synchronization with the falling edge of the serial clock. Transmission data is held in the SO3 latch and is output from the SO3 pin. Data that is received via the SI3 pin is latched to SIO3 in synchronization with the rising edge of the serial clock.

Completion of an 8-bit transfer automatically stops operation of SIO3 and sets the serial transfer end flag.

Figure 15-5. Timing of 3-Wire Serial I/O Mode

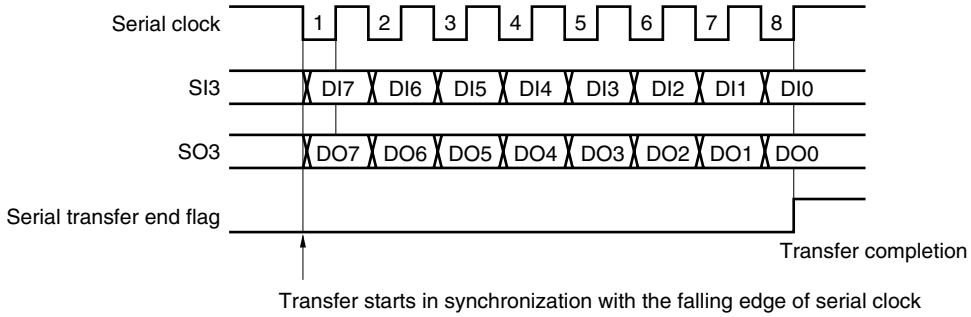

(3) Transfer start

Serial transfer starts when the following two conditions have been satisfied and transfer data has been set to (or read from) serial I/O shift register 3 (SIO3).

- The SIO3 operation control bit (CSIE3) = 1
- After an 8-bit serial transfer, either the internal serial clock is stopped or the serial clock is set to high level.

  Transmit/transmit and receive mode

  When CSIE3 = 1 and MODE = 0, transfer starts when writing to SIO3.

  Receive-only mode

  When CSIE3 = 1 and MODE = 1, transfer starts when reading from SIO3.

Caution After data has been written to SIO3, transfer will not start even if the CSIE3 bit value is set to 1.

Completion of an 8-bit transfer automatically stops the serial transfer operation and sets the serial transfer end flag.

CHAPTER 16 LCD CONTROLLER/DRIVER

16.1 LCD Controller/Driver Functions

The functions of the LCD controller/driver incorporated in the μPD780958 Subseries are described below.

(1) Automatic output of segment signals and common signals is possible by automatic reading of the display data memory.
(2) Display mode
- 1/3 duty (1/3 bias), static mode

(3) Any of four frame frequencies can be selected in each display mode.
(4) Maximum of 30 segment signal outputs (S0 to S29); 3 common signal outputs (COM0 to COM2).
Twenty two of the segment signal outputs can be individually switched to input/output ports (P70/S8 to P77/S15, P80/S16 to P87/S23, and P90/S24 to P95/S29).

The maximum number of displayable pixels in each display mode is shown in Table 16-1.

Table 16-1. Maximum Number of Display Pixels

Bias Method	Time Division	Common Signals Used	Maximum Number of Pixels
1/3	3	COM0 to COM2	90 (30 segments × 3 commons)[Note]

Note 10 digits on 8-type LCD panel with 3 segments/digit.

Figure 16-1. Block Diagram of LCD Controller/Driver

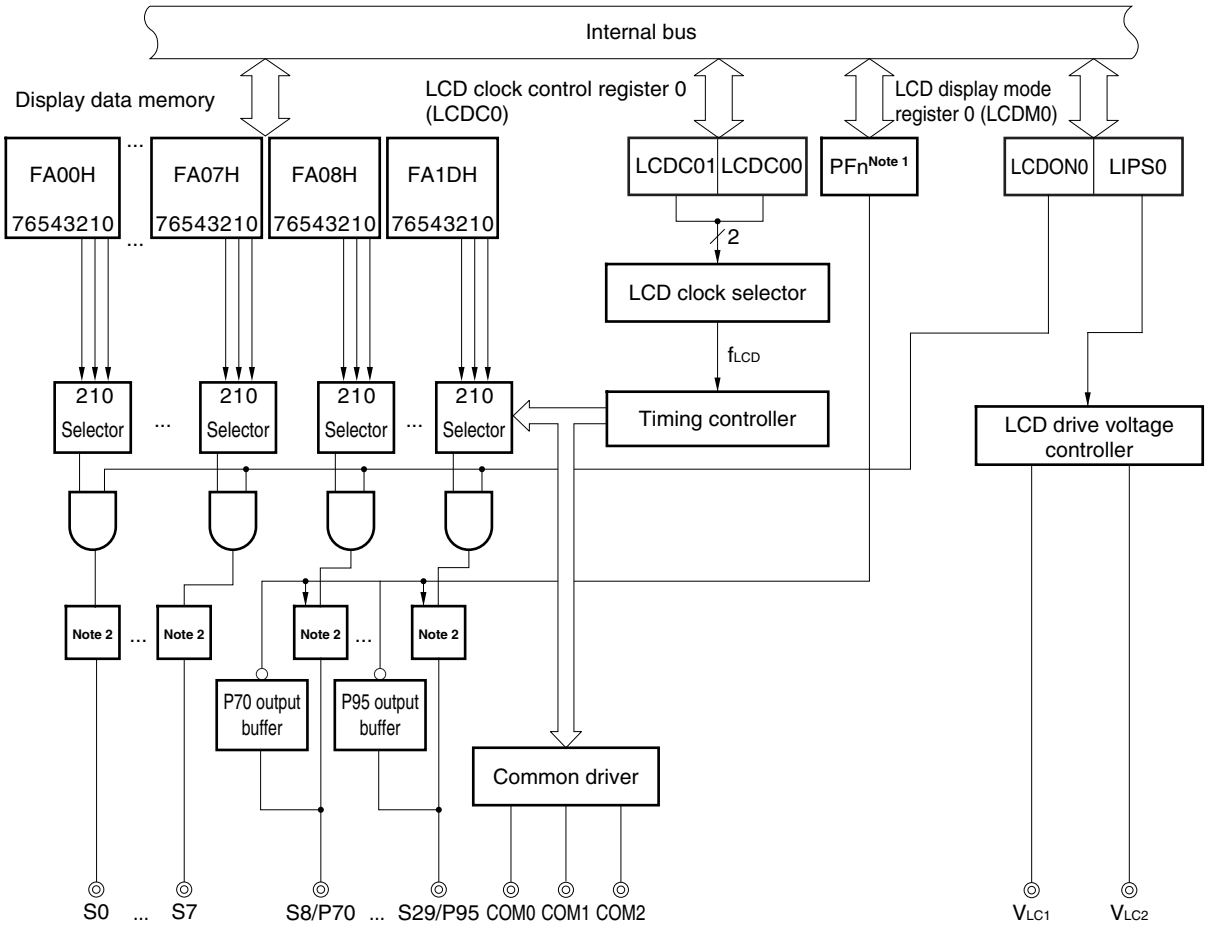

Notes 1. PFn: Port function control register n (n = 7 to 9)

2. Segment driver

Remark In the same way as port mode register n (PMn), each flag of PFn corresponds to each bit of a port (8 bits for ports 7 and 8, and 6 bits for port 9). This register can therefore be controlled in 1-bit units.

16.2 LCD Controller/Driver Configuration

The LCD controller/driver consists of the following hardware.

Table 16-2. Configuration of LCD Controller/Driver

Item	Configuration
Display outputs	Segment signals: 30 Outputs dedicated to segment signals: 8 Outputs with alternate function as I/O ports: 22 Common signals: 3 (COM0 to COM2)
★ Control registers	LCD display mode register 0 (LCDM0) ★ LCD clock control register 0 (LCDC0) Port function control registers 7 to 9 (PF7 to PF9)

Figure 16-2. Block Diagram of LCD Clock Selector

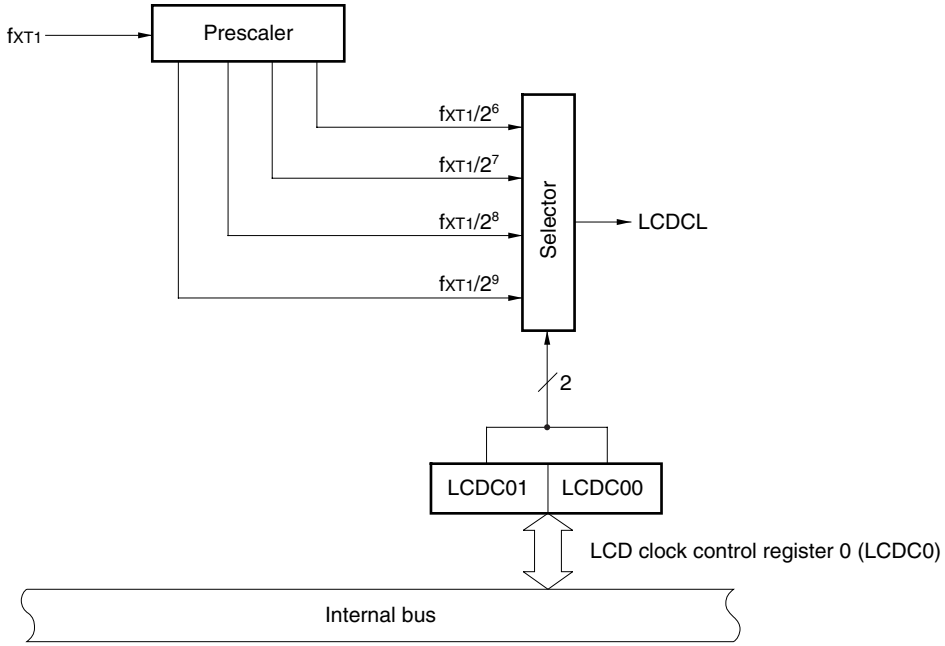

Remark LCDCL: LCD clock

16.3 LCD Controller/Driver Control Registers

The following three types of registers are used to control the LCD controller/driver.

★ • LCD display mode register 0 (LCDM0)
★ • LCD clock control register 0 (LCDC0)
• Port function control registers 7 to 9 (PF7 to PF9)

★ **(1) LCD display mode register 0 (LCDM0)**

This is a register that enables/disables LCD operation, controls the power supply for LCD driving, and sets the display mode.

LCDM0 is set with a 1-bit or 8-bit memory manipulation instruction.

$\overline{\text{RESET}}$ input sets LCDM0 to 00H.

Figure 16-3. Format of LCD Display Mode Register 0 (LCDM0)

Address: FF90H After reset: 00H R/W

Symbol	7	6	5	4	3	2	1	0
LCDM0	LCDON0	0	0	LIPS0	0	LCDM02	LCDM01	LCDM00

LCDON0[Note 1]	LCD display enable/disable
0	Display OFF
1	Display ON

LIPS0[Note 2]	Power supply for LCD drive
0	Does not supply LCD drive power
1	Supplies LCD drive power

LCDM02	LCDM01	LCDM00	Display mode selection	
			Time division	Bias method
0	0	0	No selection	
0	0	1	3	1/3
1	0	0	Static	
Other than above			Setting prohibited	

★ **Notes 1.** When bit 7 (LCDON0) is 0, the S0 to S7, S8/P70 to S2/P95, and COM0 to COM2 pins become low-level outputs.

2. The V_{LC1} and V_{LC2} pins become high-impedance when bit 4 (LIPS0) is 0.

Cautions 1. To enable the LCD display, set LCDON0 to 1 after 0.5 seconds have elapsed following supply of the power for LCD driving (LIPS0 is set to 1). 0.5 seconds is the time during which the LCD drive power supply stabilizes.

2. The initial value for display mode selection is "No selection". Therefore, it is necessary to select either "1/3 bias" or "Static" for the display mode when the LCD is used.

★ **3. When the static mode is selected (LCDM02 = 1, LCDM01 and LCDM00 = 0), set LIPS0 to 0.**

★ **(2) LCD clock control register 0 (LCDC0)**

This is a register that sets the frame frequencies.

LCDC0 is set with an 8-bit memory manipulation instruction.

$\overline{\text{RESET}}$ input sets LCDC0 to 00H.

Figure 16-4. Format of LCD Clock Control Register 0 (LCDC0)

Address: FF91H After reset: 00H R/W

Symbol	7	6	5	4	3	2	1	0
LCDC0	0	0	0	0	0	0	LCDC01	LCDC00

LCDC01	LCDC00	LCD frame frequency
0	0	$f_{XT1}/2^6$ (512 Hz)
0	1	$f_{XT1}/2^7$ (256 Hz)
1	0	$f_{XT1}/2^8$ (128 Hz)
1	1	$f_{XT1}/2^9$ (64 Hz)

★ **Caution Do not overwrite LCDC0 while the display is ON (bit 7 (LCDON0) of LCD display mode register 0 (LCDM0) = 1).**

Remarks 1. Figures in parentheses apply to operation with f_{XT1} = 32.768 kHz.

2. f_{XT1}: Subsystem clock 1 oscillation frequency

(3) Port function control registers 7 to 9 (PF7 to PF9)

This is a register that sets whether the pins of ports 7 to 9 are used as ports or as LCD drive power supply segment outputs.

PF7 to PF9 are set with a 1-bit or 8-bit memory manipulation instruction.

$\overline{\text{RESET}}$ input sets PF7 to PF9 to 00H.

Figure 16-5. Format of Port Function Control Registers 7 to 9 (PF7 to PF9)

Address: FF57H, FF58H, FF59H After reset: 00H R/W

Symbol	7	6	5	4	3	2	1	0
PF7	PF77	PF76	PF75	PF74	PF73	PF72	PF71	PF70
	7	6	5	4	3	2	1	0
PF8	PF87	PF86	PF85	PF84	PF83	PF82	PF81	PF80
	7	6	5	4	3	2	1	0
PF9	0	0	PF95	PF94	PF93	PF92	PF91	PF90

PF7m, PF8m, PF9n	P7m, P8m, P9n pin function control (m = 0 to 7, n = 0 to 5)
0	Functions as port pin
1	Functions as segment output pin

Caution When a pin is selected to function as a segment output pin using the port function control register, the port mode and port latch values of the corresponding bit become invalid. However, a software pull-up resistor specified by pull-up resistor option registers 7 to 9 (PU7 to PU9) will not be disconnected. When a pin is used as a segment pin, therefore, be sure to set the corresponding bit of PU7 to PU9 to 0.

16.4 LCD Controller/Driver Settings

LCD controller/driver settings should be performed as shown below.

<1> Set the display data to the display data memory (FA00H to FA1DH).
<2> Set the corresponding bit of the port function control register (PF) for the pins that are set to be used as segment outputs.
<3> Set bit 4 (LIPS0) of LCD display mode register 0 (LCDM0) to 1 and select the display mode.
<4> Set the LCD frame frequency using LCD clock control register 0 (LCDC0).
<5> After LCD drive power supply is stabilized (0.5 seconds min.), set bit 7 (LCDON0) of LCD display mode register 0 (LCDM0) to 1.

Next, set data in the display data memory according to the display contents.

16.5 LCD Display Data Memory

The LCD display data memory is mapped to addresses FA00H to FA1DH. The data stored in the LCD display data memory can be displayed on an LCD panel by the LCD controller/driver.

Figure 16-6 shows the relationship between the LCD display data memory contents and the segment/common outputs.

Any area not used for display can be used as normal RAM.

Figure 16-6. Relationship Between LCD Display Data Memory Contents and Segment/Common Outputs

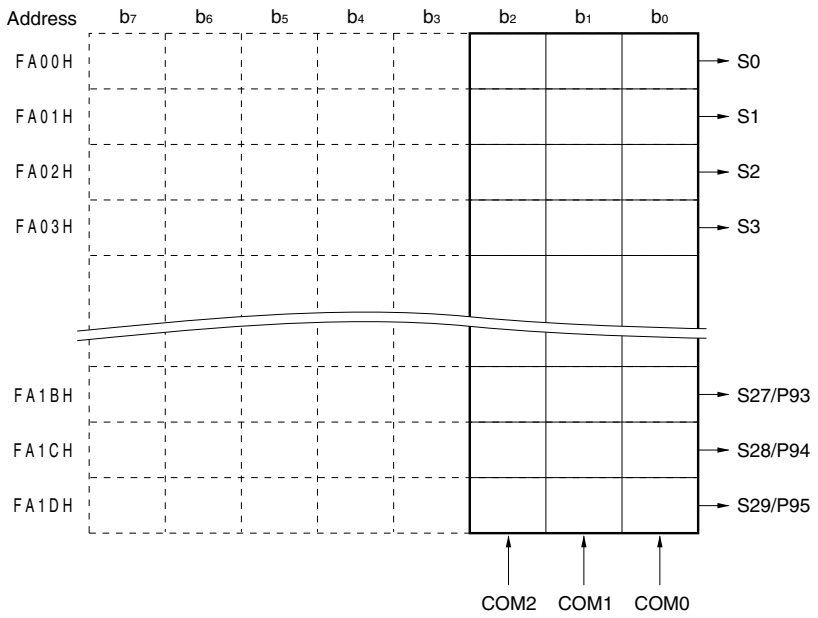

Caution The higher 5 bits of the LCD display data memory do not incorporate memory. Be sure to set them to 0.

16.6 Common Signals and Segment Signals

An individual pixel on an LCD panel lights when the potential difference of the corresponding common signal and segment signal reaches or exceeds a given voltage (the LCD drive voltage V_{LCD}). The pixel turns off when the potential difference becomes less than V_{LCD}.

As an LCD panel deteriorates if a DC voltage is applied to the common signals and segment signals, it is driven by AC voltage.

(1) Common signals

For common signals, the selection timing order is as shown in Table 16-3 in accordance with the number of time divisions set, and operations are repeated with these as the cycle. In the static display mode, the same signal is output to COM0 to COM2.

Table 16-3. COM Signals

COM Signal / Time Division	COM0	COM1	COM2
Static			
3-time division			

(2) Segment signals

Segment signals correspond to a 30-byte LCD display data memory (FA00H to FA1DH). Bits 0, 1, and 2 of each data memory are read in synchronization with the COM0, COM1, and COM2 timings respectively, and if the value of the bit is 1, it is converted to the selection voltage. If the value of the bit is 0, it is converted to the non-selection voltage and output to a segment pin (S0 to S29) (S8 to S29 have alternate functions as I/O ports).

Consequently, it is necessary to check what combination of front surface electrodes (corresponding to the segment signals) and rear surface electrodes (corresponding to the common signals) of the LCD display to be used form the display pattern, and then write bit data corresponding on a one-to-one basis with the pattern to be displayed.

In addition, because LCD display data memory bits 1 and 2 are not used for LCD display in the static display mode, they can be used for other than display purposes.

Bits 3 to 7 are fixed to 0.

(3) Common signal and segment signal output waveforms

The voltages shown in Figures 16-7 and 16-8 are output to the common signals and segment signals.

The $\pm V_{LCD}$ ON voltage is only produced when the common signal and segment signal are both at the selection voltage; other combinations turn the voltage OFF.

Figure 16-7. Common Signal Waveform

(a) Static display mode

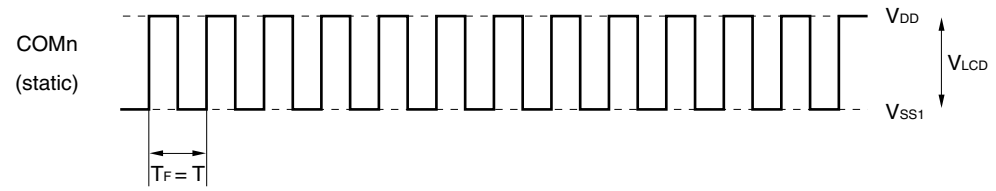

T: One LCDCL cycle T_F: Frame frequency

(b) 1/3 bias method

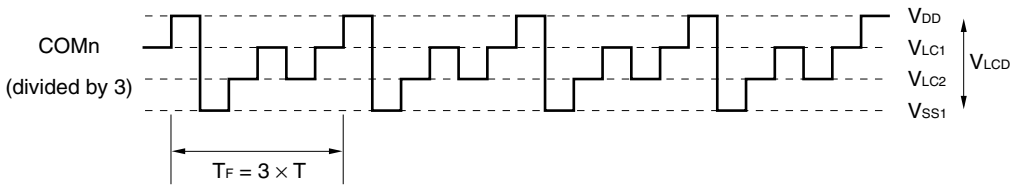

T: One LCDCL cycle T_F: Frame frequency

Remark LCDCL: LCD clock

Figure 16-8. Voltages and Phases of Common Signal and Segment Signal

(a) Static display mode

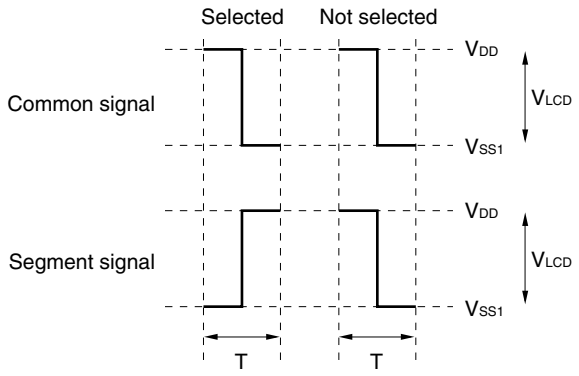

T: One LCDCL cycle

(b) 1/3 bias method

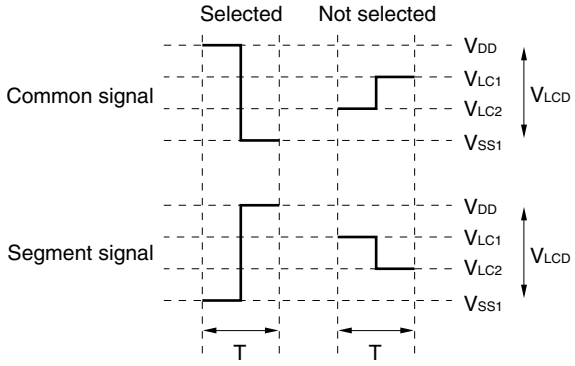

T: One LCDCL cycle

Remark LCDCL: LCD clock

16.7 Supply of LCD Drive Voltages V_{LC1} and V_{LC2}

In mask ROM versions, an external capacitor can be connected to the V_{LC1} and V_{LC2} pins to produce the LCD drive voltage. By employing the split-capacitor method instead of conventional split-resistor method it is possible to reduce the LCD drive current.

Figure 16-9 shows an example of LCD drive voltage supply.

Figure 16-9. Connection Example of LCD Drive Voltage

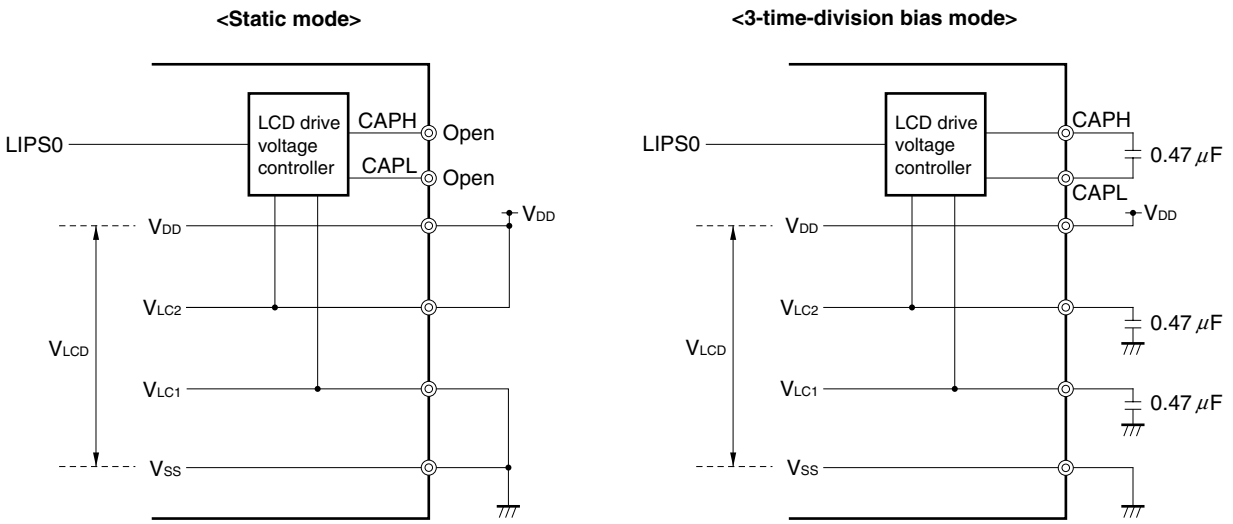

Caution The level of the LCD drive voltage (V_{LC1}, V_{LC2}) differs between devices and emulation boards.

- **In devices (μPD780957(A), 780958(A))… $V_{LC2} > V_{LC1}$**
- **In emulation boards (IE-780958-NS-EM4)… $V_{LC1} > V_{LC2}$**

  The pin connection is the same for both devices and emulation boards, as shown Figure 16-9 above.

Remark LIPS0: Bit 4 of LCD display mode register 0 (LCDM0)

★ 16.8 Display Mode

16.8.1 Static display example

Figure 16-11 shows the connection between a static-type 3-digit LCD panel with the display pattern shown in Figure 16-10 and the μPD780958 Subseries segment (S0 to S23) and common (COM0) signals. The display example is “1.23”, and the display data memory contents (addresses FA00H to FA17H) correspond to this.

An explanation is given here taking the example of the first digit from the right “3.”(Ǝ.). In accordance with the display pattern in Figure 16-10, selection and non-selection voltages must be output to pins S0 to S7 as shown in Table 16-4 at the COM0 common signal timing.

Table 16-4. Selection and Non-Selection Voltages (COM0)

Segment / Common	S0	S1	S2	S3	S4	S5	S6	S7
COM0	NS	S	S	S	NS	S	NS	S

Remark S = Selection, NS = Non-selection

From this, it can be seen that 01110101 must be prepared for bit 0 of the display data memory (addresses FA00H to FA07H) corresponding to S0 to S7.

The LCD drive waveforms for S0, S1, and COM0 are shown in Figure 16-12. When S1 is the selection voltage at the COM0 selection timing, it can be seen that the $+V_{LCD}/-V_{LCD}$ AC square wave, which is the LCD illumination (ON) level, is generated.

Shorting the COM0 to COM2 lines increases the current drive capability because the same waveform as COM0 is output to COM1 and COM2.

Figure 16-10. Static LCD Display Pattern and Electrode Connections

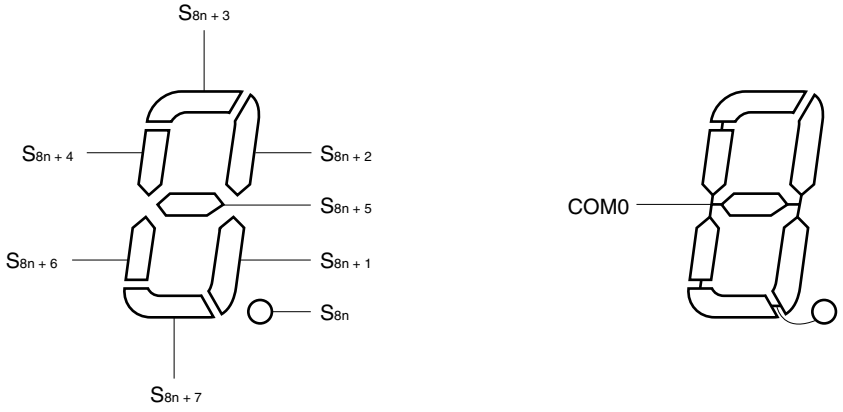

n = 0 to 2

Figure 16-11. Connection Example of Static LCD Panel

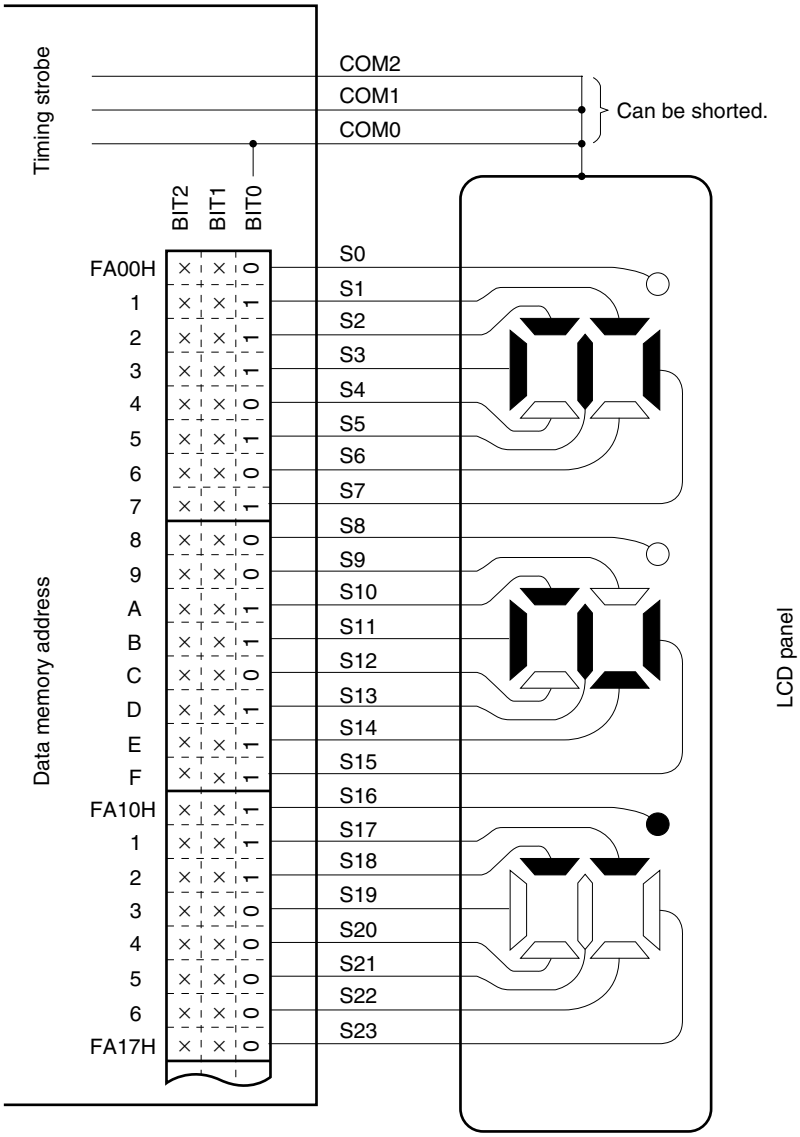

×: Any data can always be stored in this bit because this is a static display.

★ **Figure 16-12. Static LCD Driving Waveform Example**

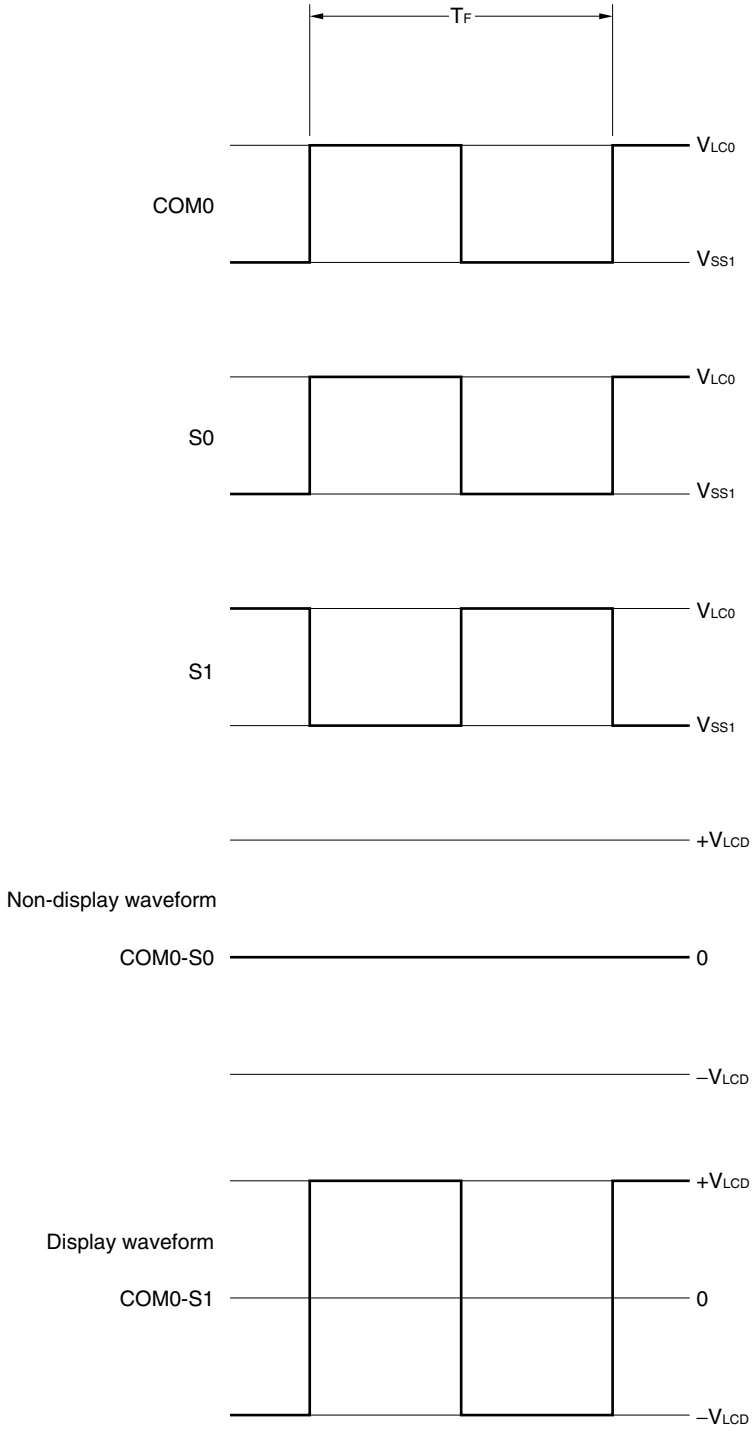

16.8.2 3-time-division display example

Figure 16-14 shows the connection between a 3-time-division type 10-digit LCD panel with the display pattern shown in Figure 16-13 and the μPD780958 Subseries segment signals (S0 to S29) and common signals (COM0 to COM2). The display example is "123456.7890", and the display data memory contents (addresses FA00H to FA1DH) correspond to this.

An explanation is given here taking the example of the fifth digit from the right "6." (**5.**). In accordance with the display pattern in Figure 16-13, selection and non-selection voltages must be output to pins S12 to S14 as shown in Table 16-5 at the COM0 to COM2 common signal timings.

Table 16-5. Selection and Non-Selection Voltages (COM0 to COM2)

Segment / Common	S12	S13	S14
COM0	NS	S	S
COM1	S	S	S
COM2	S	S	–

Remark S = Selection, NS = Non-selection

From this, it can be seen that 00000110 must be prepared in the display data memory (address FA0CH) corresponding to S12.

Examples of the LCD drive waveforms between S12 and the common signals are shown in Figure 16-15 (1/3 bias method). When S12 is the selection voltage at the COM1 selection timing or S12 is the selection voltage at the COM2 selection timing, it can be seen that the $+V_{LCD}/-V_{LCD}$ AC square wave, which is the LCD illumination (ON) level, is generated.

Figure 16-13. 3-Time-Division LCD Display Pattern and Electrode Connections

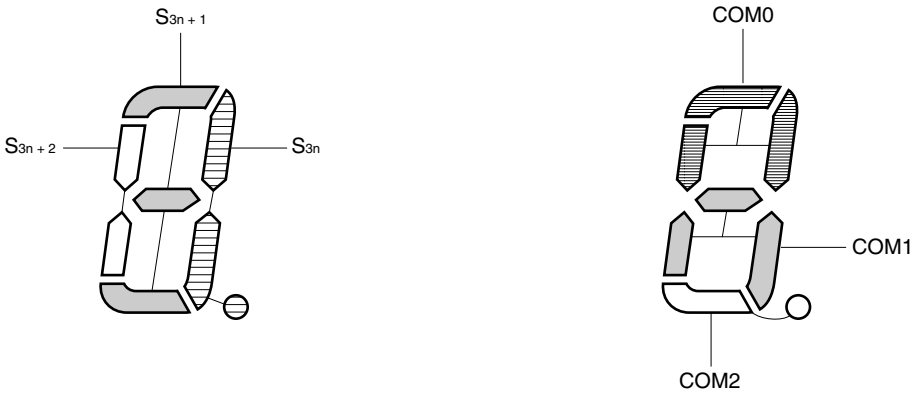

n = 0 to 9

Figure 16-14. Connection Example of 3-Time-Division LCD Panel

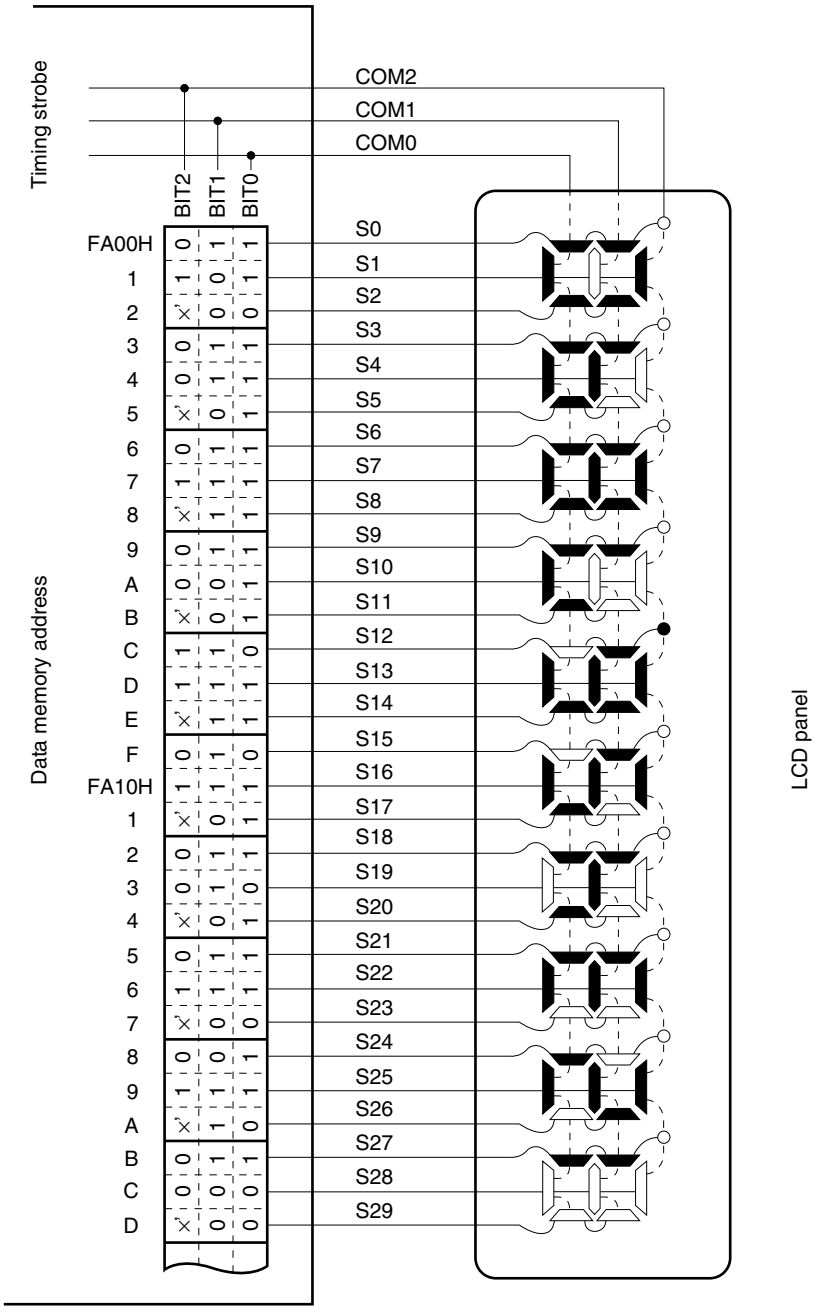

×': Any data can be stored in this bit because it has no corresponding segment in the LCD panel.

Figure 16-15. Example of 3-Time-Division LCD Drive Waveform (1/3 Bias)

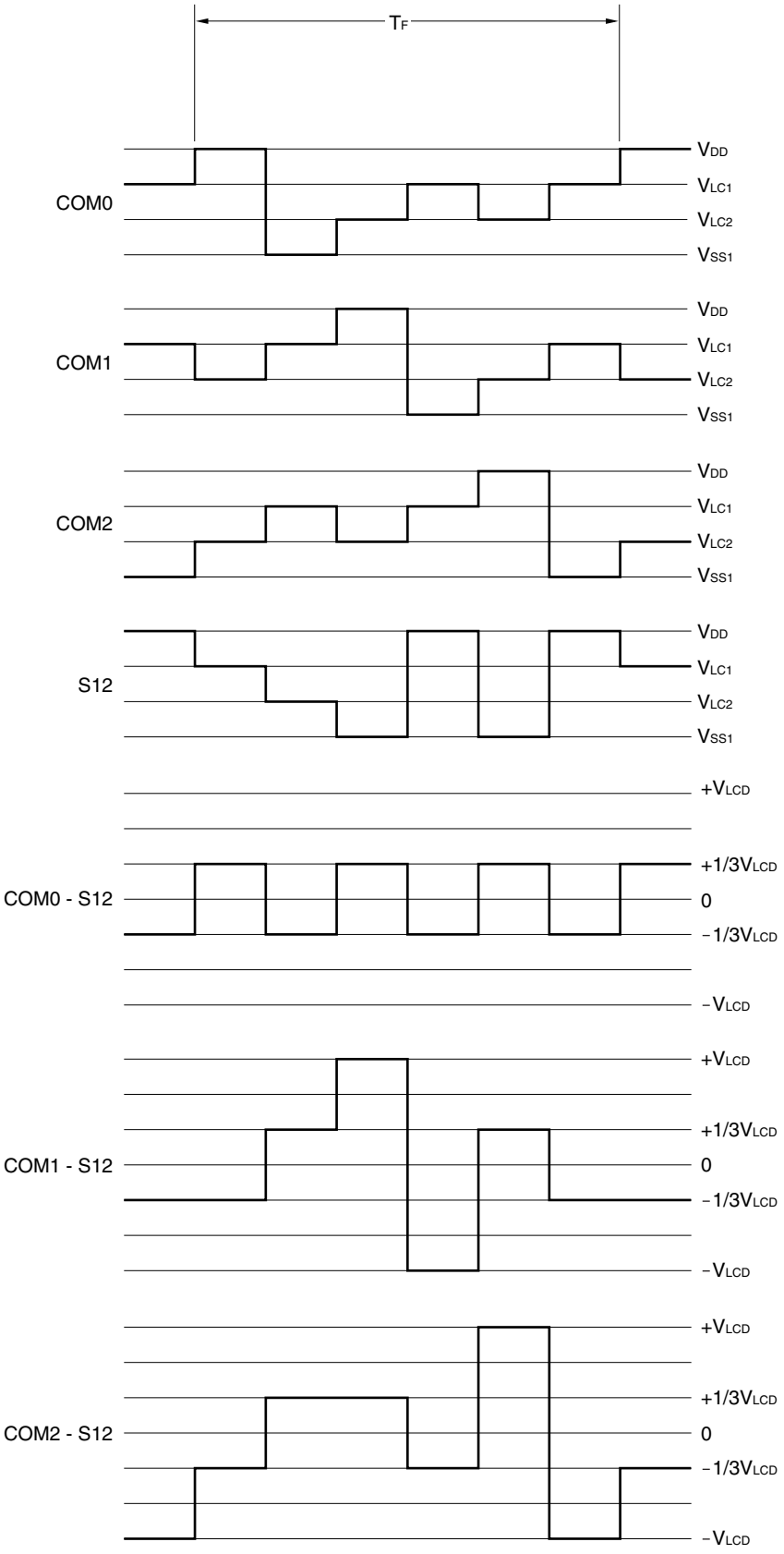

CHAPTER 17 INTERRUPT FUNCTIONS

17.1 Types of Interrupt Functions

The following three types of interrupt functions are available.

(1) Non-maskable interrupt

This interrupt is unconditionally acknowledged even in the interrupt disabled status. It is not subject to interrupt priority control and therefore takes precedence over all interrupt requests.

This interrupt generates a standby release signal.

One interrupt request from the watchdog timer is incorporated as a non-maskable interrupt.

(2) Maskable interrupts

These interrupts are subject to mask control, and can be divided into two groups according to the setting of the priority specification flag registers (PR0L, PR0H, PR1L): one with higher priority and one with lower priority. Higher-priority interrupts can nest lower-priority interrupts (multiple interrupt function). The priority when two or more interrupt requests with the same priority occur at the same time is predetermined (see **Table 17-1**).

The interrupt generates a standby release signal.

Twelve external interrupt requests and seventeen internal interrupt requests are incorporated as maskable interrupts.

(3) Software interrupt

This is a vectored interrupt generated when the BRK instruction is executed and can be acknowledged even in the interrupt disabled status. This interrupt is not subject to interrupt priority control.

17.2 Interrupt Sources and Configuration

A total of 31 interrupt sources including non-maskable, maskable, and software interrupt sources are available (see **Table 17-1**).

Table 17-1. Interrupt Source List

Interrupt Type	Default Priority[Note 1]	Interrupt Source		Internal/ External	Vector Table Address	Basic Configuration[Note 2]
		Name	Trigger			
Non-maskable	–	INTWDT	Watchdog timer overflow (when non-maskable interrupt is selected)	Internal	0004H	(A)
Maskable	0 (highest)	INTWDT	Watchdog timer overflow (when maskable interrupt is selected)			(B)
	1	INTP0	INTP0 pin input edge detection	External	0006H	(C)
	2	INTMRO0	MRTD edge detection	Internal	0008H	(B)
	3	INTP1	INTP1 pin input edge detection	External	000AH	(C)
	4	INTP2	INTP2 pin input edge detection		000CH	
	5	INTP3	INTP3 pin input edge detection		000EH	
	6	INTP4	INTP4 pin input edge detection		0010H	
	7	INTP5	INTP5 pin input edge detection		0012H	
	8	INTP6	INTP6 pin input edge detection		0014H	
	9	INTTM00	• When CR00 is specified for compare register: TM0 & CR00 match signal generation • When CR00 is specified for capture register: TI01 pin valid edge detection	Internal	0016H	(B)
	10	INTTM01	• When CR01 is specified for compare register: TM0 & CR01 match signal generation • When CR01 is specified for capture register: TI00 pin valid edge detection		0018H	
	11	INTSER2	Serial interface UART2 reception error occurrence		001AH	
	12	INTSR2	Serial interface UART2 reception completion		001CH	
	13	INTST2	Serial interface UART2 transmission completion		001EH	
	14	INTCSI3	Serial interface SIO3 transfer completion		0020H	
	15	INTMRT0	TMMR0 & CRM0 match signal generation		0022H	
	16	INTTM80	TM80 & CR80 match signal generation		0024H	
	17	INTTM81	TM81 & CR81 match signal generation		0026H	
	18	INTTM82	TM82 & CR82 match signal generation		0028H	
	19	INTTM83	TM83 & CR83 match signal generation		002AH	
	20	INTTM2	TM2 & CR2 match signal generation		002CH	
	21	INTSA0	Sampling timer (TMSA0) & compare register (CRSA0) match signal generation		002EH	
	22	INTSB0	Sampling timer (TMSB0) & compare register (CRSB0) match signal generation		0030H	
	23	INTRTO1	Real-time output specified number of reloads achieve register		0032H	
	24	INTSMP0	Sampling interrupt input 0	External	0034H	(C)
	25	INTSMP1	Sampling interrupt input 1		0036H	
	26	INTSMP2	Sampling interrupt input 2		0038H	
	27	INTSMP3	Sampling interrupt input 3		003AH	
	28	INTSMP4	Sampling interrupt input 4		003CH	
Software	–	BRK	Execution of BRK instruction	–	003EH	(D)

Notes 1. The default priority is the highest priority when more than one maskable interrupt is generated. 0 is the highest priority and 28 is the lowest.

2. Basic configuration types (A) to (D) correspond to (A) to (D) in Table 17-1.

★ **Remark** There are two types of watchdog timer interrupt sources (INTWDT), a non-maskable interrupt and a maskable interrupt (internal). Select one of these types.

Figure 17-1. Basic Configuration of Interrupt Function (1/2)

(A) Internal non-maskable interrupt

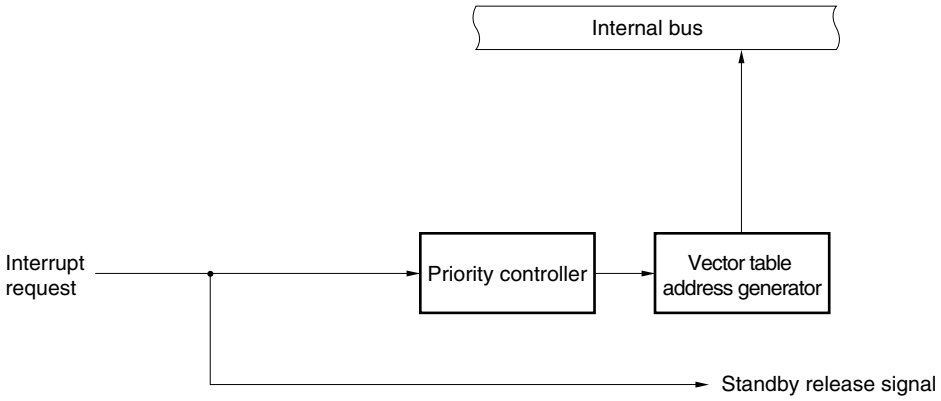

(B) Internal maskable interrupt

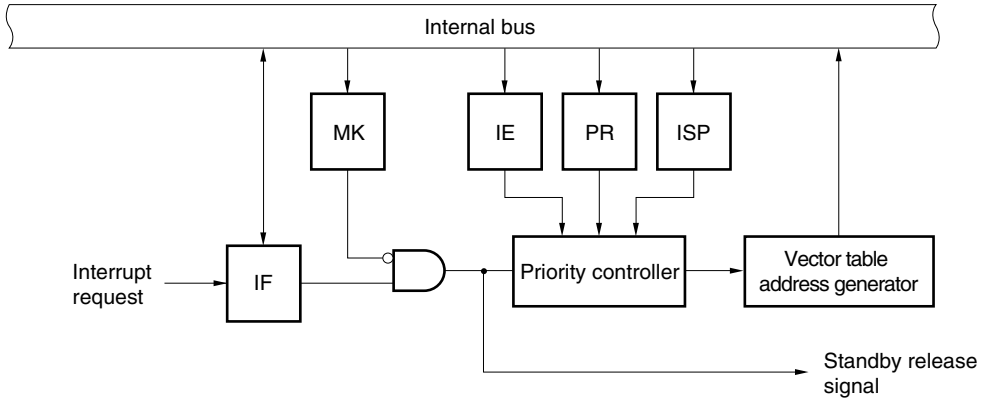

(C) External maskable interrupt (INTP0 to INTP6)

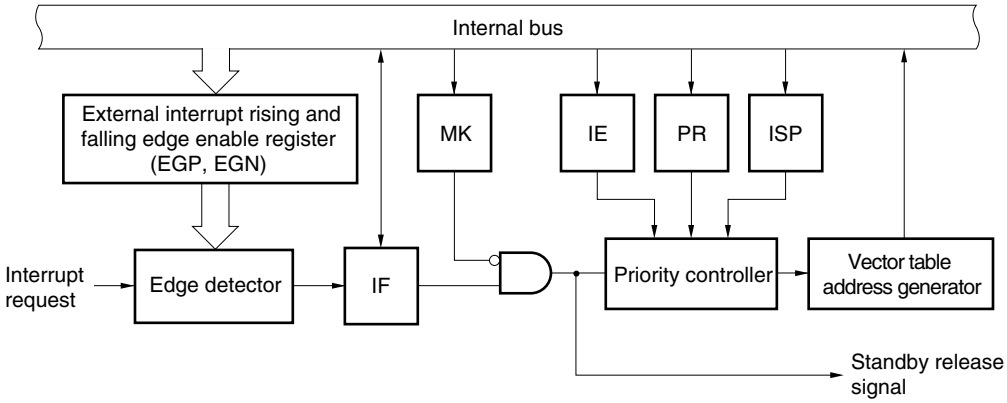

Figure 17-1. Basic Configuration of Interrupt Function (2/2)

(D) Software interrupt

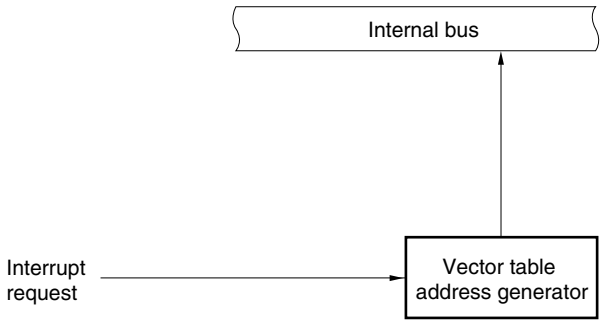

IF: Interrupt request flag
IE: Interrupt enable flag
ISP: In-service priority flag
MK: Interrupt mask flag
PR: Priority specification flag

17.3 Interrupt Function Control Registers

The following 6 types of registers are used to control the interrupt function.

- Interrupt request flag registers (IF0L, IF0H, IF1L, IF1H)
- Interrupt mask flag registers (MK0L, MK0H, MK1L, MK1H)
- Priority specification flag registers (PR0L, PR0H, PR1L, PR1H)
- External interrupt rising edge enable register (EGP)
- External interrupt falling edge enable register (EGN)
- Program status word (PSW)

Table 17-2 shows the names of the interrupt request flags, interrupt mask flags, and priority specification flags corresponding to the respective interrupt request sources.

Table 17-2. Flags Corresponding to Interrupt Request Sources

Interrupt Source	Interrupt Request Flag		Interrupt Mask Flag		Priority Specification Flag	
		Register		Register		Register
INTWDT	WDTIF[Note]	IF0L	WDTMK[Note]	MK0L	WDTPR[Note]	PR0L
INTP0	PIF0		PMK0		PPR0	
INTMRO0	MROIF0		MROMK0		MROPR0	
INTP1	PIF1		PMK1		PPR1	
INTP2	PIF2		PMK2		PPR2	
INTP3	PIF3		PMK3		PPR3	
INTP4	PIF4		PMK4		PPR4	
INTP5	PIF5		PMK5		PPR5	
INTP6	PIF6	IF0H	PMK6	MK0H	PPR6	PR0H
INTTM00	TMIF00		TMMK00		TMPR00	
INTTM01	TMIF01		TMMK01		TMPR01	
INTSER2	SERIF2		SERMK2		SERPR2	
INTSR2	SRIF2		SRMK2		SRPR2	
INTST2	STIF2		STMK2		STPR2	
INTCSI3	CSIIF3		CSIMK3		CSIPR3	
INTMRT0	MRTIF0		MRTMK0		MRTPR0	
INTTM80	TMIF80	IF1L	TMMK80	MK1L	TMPR80	PR1L
INTTM81	TMIF81		TMMK81		TMPR81	
INTTM82	TMIF82		TMMK82		TMPR82	
INTTM83	TMIF83		TMMK83		TMPR83	
INTTM2	TMIF2		TMMK2		TMPR2	
INTSA0	SAIF0		SAMK0		SAPR0	
INTSB0	SBIF0		SBMK0		SBPR0	
INTRTO1	RTOIF1		RTOMK1		RTOPR1	
INTSMP0	SMPIF0	IF1H	SMPMK0	MK1H	SMPPR0	PR1H
INTSMP1	SMPIF1		SMPMK1		SMPPR1	
INTSMP2	SMPIF2		SMPMK2		SMPPR2	
INTSMP3	SMPIF3		SMPMK3		SMPPR3	
INTSMP4	SMPIF4		SMPMK4		SMPPR4	

Note This is an interrupt control flag for when the watchdog timer is used as an interval timer.

(1) Interrupt request flag registers (IF0L, IF0H, IF1L, IF1H)

An interrupt request flag is set to 1 when the corresponding interrupt request is generated or when an instruction is executed, and is cleared to 0 when the interrupt request is acknowledged, when the $\overline{\text{RESET}}$ signal is input, or when an instruction is executed.

IF0L, IF0H, IF1L, and IF1H are set with a 1-bit or 8-bit memory manipulation instruction. When combining IF0L and IF0H to be used as 16-bit register IF0 or when combining IF1L and IF1H to be used as 16-bit register IF1, they are set with a 16-bit memory manipulation instruction.

$\overline{\text{RESET}}$ input sets these registers to 00H.

Figure 17-2. Format of Interrupt Request Flag Registers

Address: FFE0H After reset: 00H R/W

Symbol	7	6	5	4	3	2	1	0
IF0L	PIF5	PIF4	PIF3	PIF2	PIF1	MROIF0	PIF0	WDTIF

Address: FFE1H After reset: 00H R/W

Symbol	7	6	5	4	3	2	1	0
IF0H	MRTIF0	CSIIF3	STIF2	SRIF2	SERIF2	TMIF01	TMIF00	PIF6

Address: FFE2H After reset: 00H R/W

Symbol	7	6	5	4	3	2	1	0
IF1L	RTOIF1	SBIF0	SAIF0	TMIF2	TMIF83	TMIF82	TMIF81	TMIF80

Address: FFE3H After reset: 00H R/W

Symbol	7	6	5	4	3	2	1	0
IF1H	0	0	0	SMPIF4	SMPIF3	SMPIF2	SMPIF1	SMPIF0

××IF×	Interrupt request flag
0	Interrupt request signal is not generated
1	Interrupt request signal is generated and interrupt is requested

Cautions 1. The WDTIF flag can be read/written only when the watchdog timer is used as an interval timer. Clear the WDTIF flag to 0 when watchdog timer mode 1 is used.

2. Before restarting the timer or serial interface after the standby mode is released, be sure to clear the interrupt request flag; otherwise noise, etc., may cause the interrupt request flag to be set.

★ **3. When an interrupt is acknowledged, the interrupt request flag is automatically cleared, and then servicing of the interrupt routine is started.**

(2) Interrupt mask flag registers (MK0L, MK0H, MK1L, MK1H)

The interrupt mask flag enables or disables the corresponding maskable interrupt servicing.

MK0L, MK0H, MK1L, and MK1H are set with a 1-bit or 8-bit memory manipulation instruction. When combining MK0L and MK0H to be used as 16-bit register MK0 or when combining MK1L and MK1H to be used as 16-bit register MK1, they are set with a 16-bit memory manipulation instruction.

$\overline{\text{RESET}}$ input sets these registers to FFH.

Figure 17-3. Format of Interrupt Mask Flag Registers

Address: FFE4H After reset: FFH R/W

Symbol	7	6	5	4	3	2	1	0
MK0L	PMK5	PMK4	PMK3	PMK2	PMK1	MROMK0	PMK0	WDTMK

Address: FFE5H After reset: FFH R/W

Symbol	7	6	5	4	3	2	1	0
MK0H	MRTMK0	CSIMK3	STMK2	SRMK2	SERMK2	TMMK01	TMMK00	PMK6

Address: FFE6H After reset: FFH R/W

Symbol	7	6	5	4	3	2	1	0
MK1L	RTOMK1	SBMK0	SAMK0	TMMK2	TMMK83	TMMK82	TMMK81	TMMK80

Address: FFE7H After reset: FFH R/W

Symbol	7	6	5	4	3	2	1	0
MK1H	1	1	1	SMPMK4	SMPMK3	SMPMK2	SMPMK1	SMPMK0

××MK×	Interrupt servicing control
0	Enables interrupt servicing
1	Disables interrupt servicing

Caution Because port 0 has an alternate function as external interrupt request inputs, the corresponding interrupt request flag is set when the output mode is specified and the output level of a port pin is changed. Therefore, to use the port in the output mode, set the corresponding interrupt mask flag to 1 in advance.

(3) Priority specification flag registers (PR0L, PR0H, PR1L, PR1H)

A priority specification flag sets the priority of the corresponding maskable interrupt.

PR0L, PR0H, PR1L, and PR1H are set with a 1-bit or 8-bit memory manipulation instruction. When combining PR0L and PR0H to be used as 16-bit register PR0 or when combining PR1L and PR1H to be used as 16-bit register PR1, they are set with a 16-bit memory manipulation instruction.

$\overline{\text{RESET}}$ input sets these registers to FFH.

Figure 17-4. Format of Priority Specification Flag Registers

Address: FFE8H After reset: FFH R/W

Symbol	7	6	5	4	3	2	1	0
PR0L	PPR5	PPR4	PPR3	PPR2	PPR1	MROPR0	PPR0	WDTPR

Address: FFE9H After reset: FFH R/W

Symbol	7	6	5	4	3	2	1	0
PR0H	MRTPR0	CSIPR3	STPR2	SRPR2	SERPR2	TMPR01	TMPR00	PPR6

Address: FFEAH After reset: FFH R/W

Symbol	7	6	5	4	3	2	1	0
PR1L	RTOPR1	SBPR0	SAPR0	TMPR2	TMPR83	TMPR82	TMPR81	TMPR80

Address: FFEBH After reset: FFH R/W

Symbol	7	6	5	4	3	2	1	0
PR1H	1	1	1	SMPPR4	SMPPR3	SMPPR2	SMPPR1	SMPPR0

××PR×	Priority level selection
0	High priority level
1	Low priority level

(4) External interrupt rising edge enable register (EGP), external interrupt falling edge enable register (EGN)

These registers are used to specify the valid edge detected at the P00 to P06 pins.

EGP and EGN can be read/written with a 1-bit or 8-bit memory manipulation instruction.

$\overline{\text{RESET}}$ input sets these registers to 00H.

Figure 17-5. Format of External Interrupt Rising Edge Enable Register (EGP) and External Interrupt Falling Edge Enable Register (EGN)

Address: FF48H After reset: 00H R/W

Symbol	7	6	5	4	3	2	1	0
EGP	0	EGP6	EGP5	EGP4	EGP3	EGP2	EGP1	EGP0

Address: FF49H After reset: 00H R/W

Symbol	7	6	5	4	3	2	1	0
EGN	0	EGN6	EGN5	EGN4	EGN3	EGN2	EGN1	EGN0

EGPn	EGNn	Selection of valid edge of INTPn pin (n = 0 to 6)
0	0	Interrupts disabled
0	1	Falling edge
1	0	Rising edge
1	1	Both rising and falling edges

(5) Program status word (PSW)

The program status word is a register that holds the current status resulting from instruction execution or interrupt request. An IE flag that enables/disables maskable interrupts and an ISP flag that controls multiple interrupt processing are mapped to this register.

This register can be read or written in 8-bit units. It can also be manipulated by using a bit manipulation instruction or dedicated instruction (EI, DI). When a vectored interrupt request is acknowledged, or the BRK instruction is executed, the contents of the PSW are automatically saved to the stack and the IE flag is reset to 0. If a maskable interrupt request has been acknowledged, the contents of the priority flag of that interrupt are transferred to the ISP flag. The contents of the PSW can also be saved to the stack with the PUSH PSW instruction, and restored from the stack by the RETI, RETB, or POP PSW instruction.

$\overline{\text{RESET}}$ input sets PSW to 02H.

Figure 17-6. Configuration of Program Status Word (PSW)

Symbol	7	6	5	4	3	2	1	0	After reset
PSW	IE	Z	RBS1	AC	RBS0	0	ISP	CY	02H

Used when a normal instruction is executed

ISP	Priority of interrupt currently being serviced
0	Interrupt with higher priority is being serviced (interrupt with lower priority is disabled)
1	Interrupt is not acknowledged, or interrupt with lower priority is being serviced (all maskable interrupts are enabled)

IE	Interrupt request acknowledge enable/disable
0	Disable
1	Enable

17.4 Interrupt Servicing Operation

17.4.1 Non-maskable interrupt request acknowledgement operation

Non-maskable interrupt requests are unconditionally acknowledged even when interrupt requests are disabled. They are not subject to interrupt priority control and take precedence over all other interrupts.

When a non-maskable interrupt is acknowledged, the contents of the PSW and PC are saved into the stacks in the order of PSW then PC. The IE flag and ISP flag are reset to 0, the contents of the vector table are loaded to the PC, and then the program execution branches.

If a new non-maskable interrupt request is generated while the non-maskable interrupt service program is being executed, that interrupt request is acknowledged when the current execution of the non-maskable interrupt service program has been completed (after the RETI instruction has been executed), and one instruction in the main routine has been executed. If two or more non-maskable interrupt requests are generated while the non-maskable interrupt service program is being executed, only one non-maskable interrupt request is acknowledged after execution of the non-maskable interrupt service program has been completed.

Figure 17-7 shows the flowchart from non-maskable interrupt request generation to acknowledgement, Figure 17-8 shows the acknowledgement timing of a non-maskable interrupt request, and Figure 17-9 shows the acknowledgement operation when multiple non-maskable interrupt requests are generated.

Figure 17-7. Flowchart from Non-Maskable Interrupt Request Generation to Acknowledgement

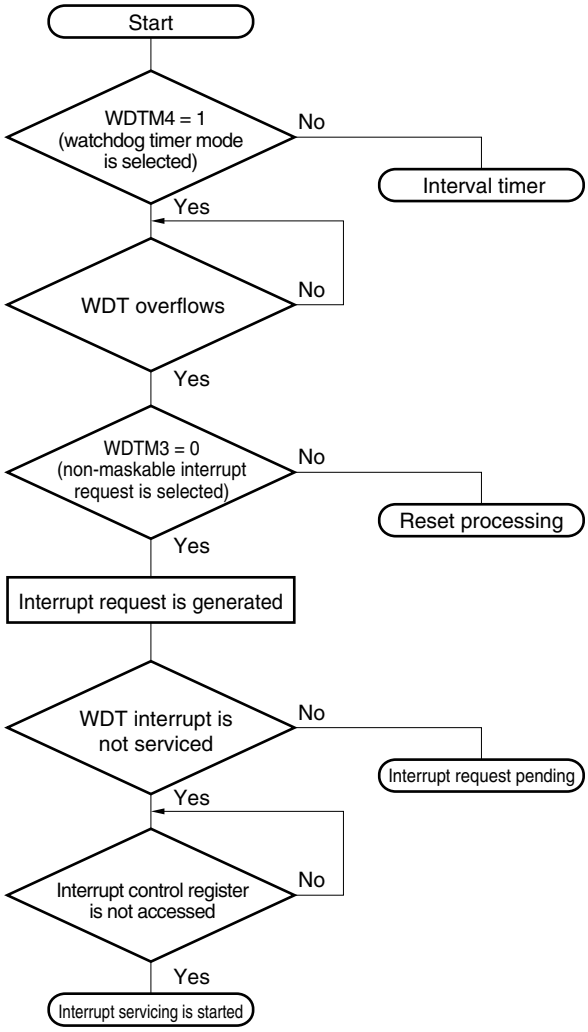

WDTM: Watchdog timer mode register

WDT: Watchdog timer

Figure 17-8. Timing of Non-Maskable Interrupt Request Acknowledgement

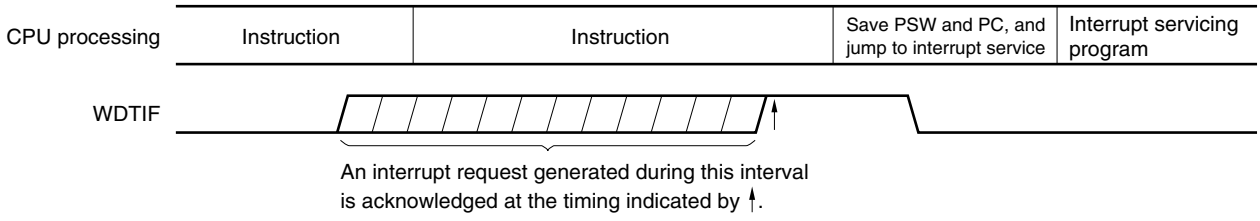

WDTIF: Watchdog timer interrupt request flag

Figure 17-9. Non-Maskable Interrupt Request Acknowledgement Operation

(a) When new non-maskable interrupt request is generated while non-maskable interrupt service program is being executed

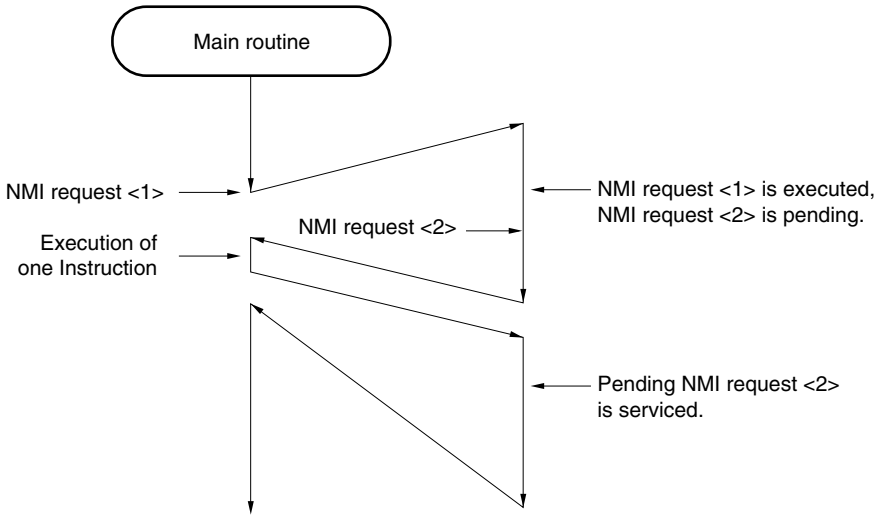

(b) If two new non-maskable interrupt requests are generated while non-maskable interrupt service program is being executed

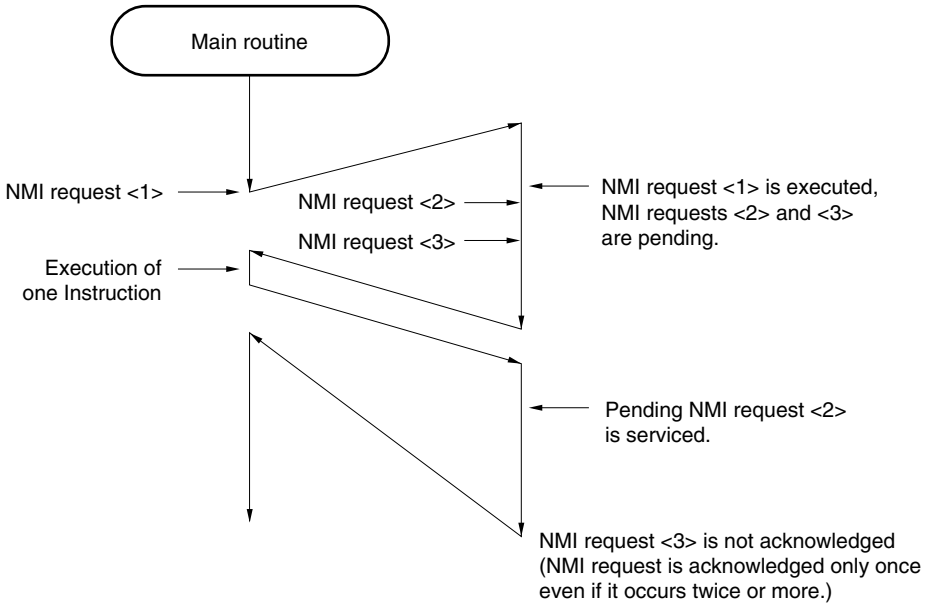

17.4.2 Maskable interrupt request acknowledgement operation

A maskable interrupt request can be acknowledged when the interrupt request flag is set to 1 and the corresponding interrupt request mask (MK) flag is cleared to 0. A vectored interrupt request is acknowledged in the interrupt enabled state (when the IE flag is set to 1). However, an interrupt request with a lower priority cannot be acknowledged while an interrupt with a higher priority is being serviced (when the ISP flag is reset to 0).

Table 17-3 shows the time required to start the interrupt service after a maskable interrupt request has been generated.

For the timing of the interrupt request acknowledgement, see Figures 17-11 and 17-12.

Table 17-3. Time from Generation of Maskable Interrupt Request to Interrupt Servicing

	Minimum Time	Maximum Time[Note]
When ××PR× = 0	7 clocks	32 clocks
When ××PR× = 1	8 clocks	33 clocks

Note The wait time reaches maximum when an interrupt request is generated immediately before a divide instruction.

Remark 1 clock: $1/f_{CPU}$ (f_{CPU}: CPU clock)

When two or more maskable interrupt requests are generated at the same time, they are acknowledged starting from the one assigned the highest priority by the priority specification flag. If the same priorities are specified by the priority specification flag, the interrupt with the highest default priority is acknowledged first.

A pending interrupt request is acknowledged when the status in which it can be acknowledged is set.

Figure 17-10 shows the interrupt request acknowledgement algorithm.

When a maskable interrupt request is acknowledged, the contents of the program status word (PSW) and program counter (PC) are saved into the stacks in the order of PSW then PC. Then the IE flag is reset to 0, and the contents of the interrupt priority specification flag of the acknowledged interrupt request are transferred to the ISP flag. In addition, the data in the vector table determined for each interrupt request is loaded on the PC, and program execution branches.

To return from interrupt servicing, use the RETI instruction.

Figure 17-10. Interrupt Request Acknowledgement Program Algorithm

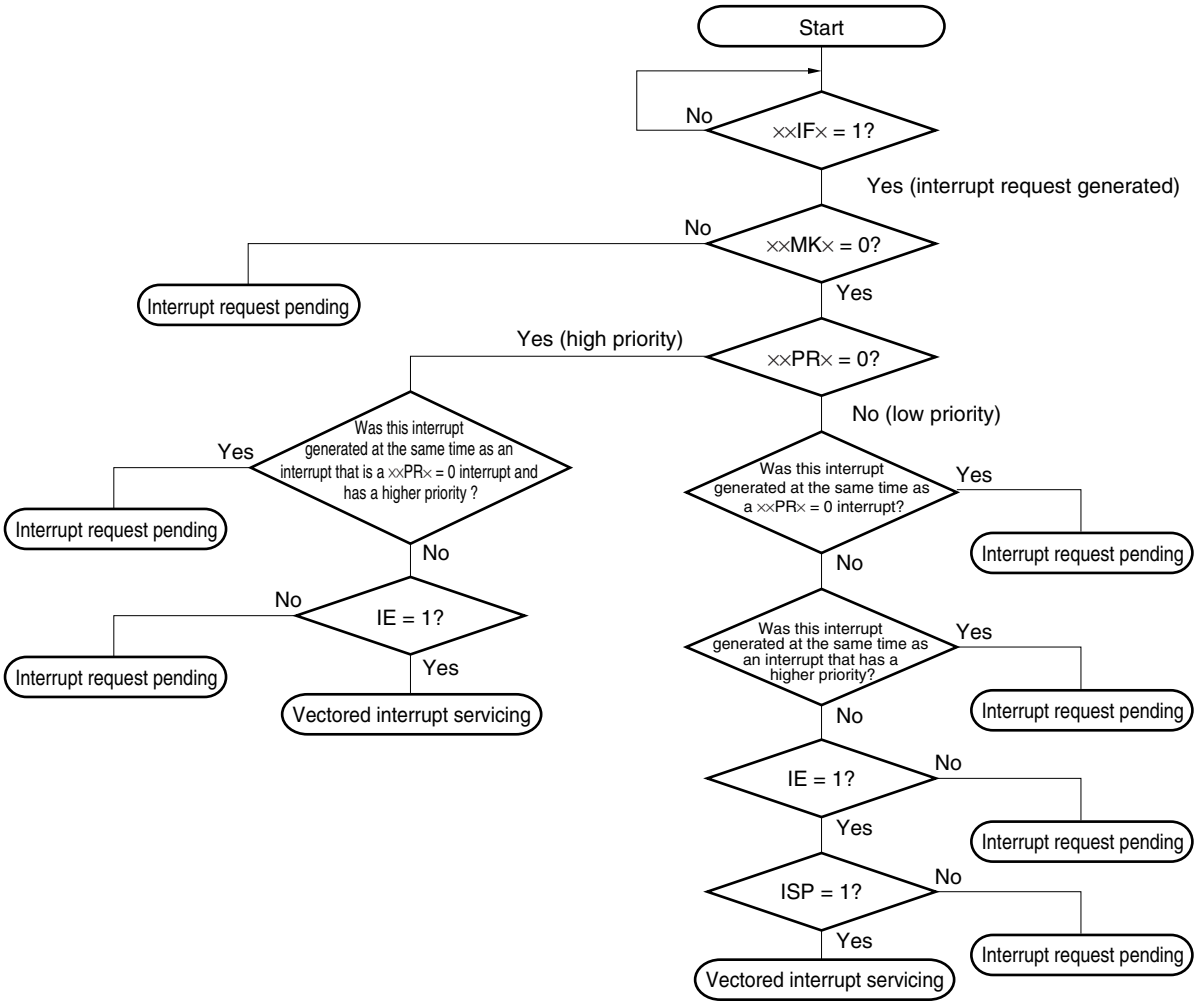

××IF×: Interrupt request flag

××MK×: Interrupt mask flag

××PR×: Priority specification flag

IE: Flag that controls acknowledgement of maskable interrupt request (1 = Enable, 0 = Disable).

ISP: Flag that indicates the priority level of the interrupt currently being serviced (0 = Higher-priority interrupt servicing, 1 = No interrupt request acknowledged, or lower-priority interrupt servicing)

Figure 17-11. Interrupt Request Acknowledgment Timing (Minimum Time)

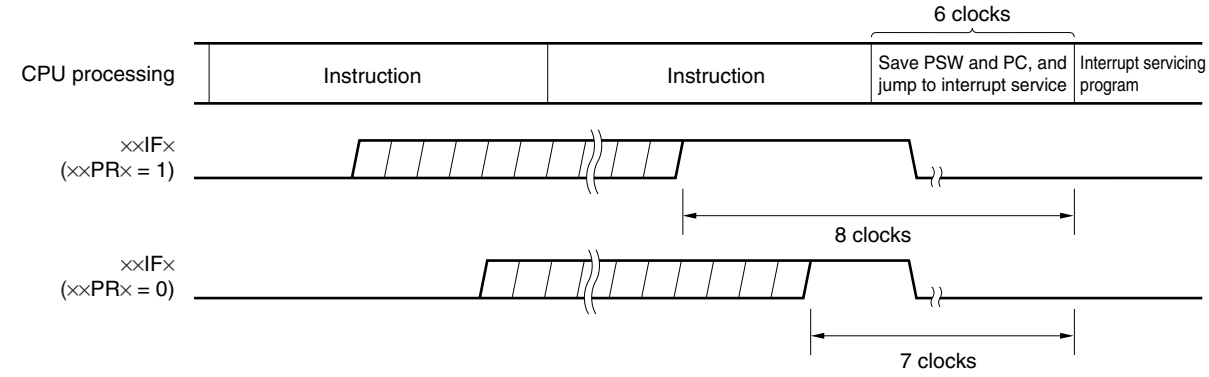

Remark 1 clock: 1/f_{CPU} (f_{CPU}: CPU clock)

Figure 17-12. Interrupt Request Acknowledgement Timing (Maximum Time)

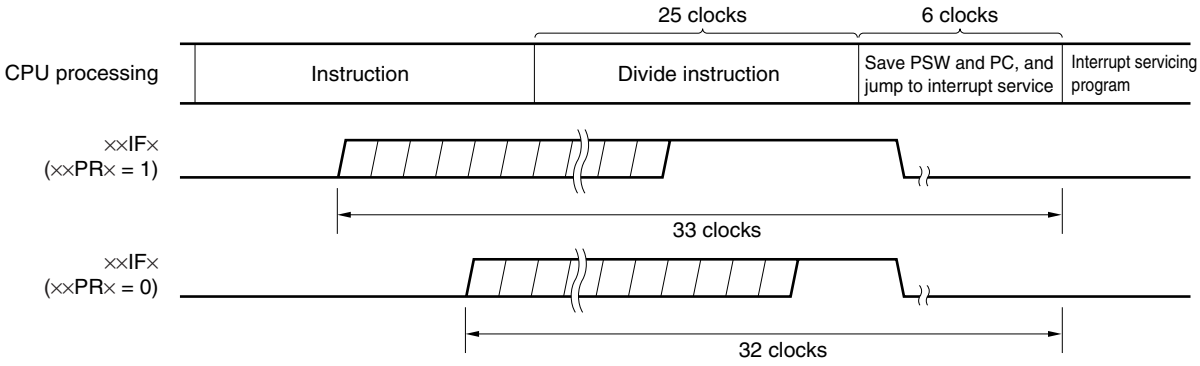

Remark 1 clock: 1/f_{CPU} (f_{CPU}: CPU clock)

17.4.3 Software interrupt request acknowledgment operation

Software interrupt requests can be acknowledged when the BRK instruction is executed. This type of interrupt cannot be disabled.

When a software interrupt is acknowledged, the contents of the program status word (PSW) and program counter (PC) are saved into the stacks in the order of PSW then PC. The IE flag is reset to 0, the contents of the vector tables (003EH, 003FH) are loaded to the PC, and the program execution branches.

To return from the software interrupt servicing, use the RETB instruction.

Caution Do not use the RETI instruction to return from a software interrupt.

17.4.4 Multiple interrupt processing

Acknowledging another interrupt request while an interrupt is being serviced is called multiple interrupt processing.

Multiple interrupt processing cannot be done unless the interrupt request acknowledgement enable state (IE = 1) is set (except for non-maskable interrupts). When an interrupt request is acknowledged, the interrupt request acknowledgement disable state (IE = 0) is automatically set. Therefore, to enable multiple interrupt processing, the IE flag must be set to 1 by executing the EI instruction during interrupt servicing in order to set the interrupt request acknowledgement enable state.

Even if the interrupt enable state is set, multiple interrupt processing may not be enabled, due to priority control factors. Interrupts have two types of priorities: default priority and programmable priority. Multiple interrupt processing control is done by programmable priority.

In the EI status, if a interrupt request having the same as or a higher priority than that of the interrupt currently being serviced is generated, the interrupt is acknowledged for multiple interrupt processing. If an interrupt request with a priority lower than that of the interrupt currently serviced is generated, the interrupt is not acknowledged for multiple interrupt processing.

In the interrupt disable state, or if an interrupt is not acknowledged for multiple interrupt processing because it has a low priority, the interrupt is held pending. After the servicing of the current interrupt has been completed and one instruction of the main processing has been executed, the pending interrupt request is acknowledged.

Interrupts are not acknowledged for multiple interrupt processing while a non-maskable interrupt is being serviced.

Table 17-4 shows interrupt requests enabled for multiple interrupt processing, and Figure 17-13 shows examples of multiple interrupt processing.

Table 17-4. Interrupt Requests Enabled for Multiple Interrupt Processing During Interrupt Servicing

Multiple Interrupt Request / Currently Serviced Interrupt		Non-Maskable Interrupt Request	Maskable Interrupt Request			
			××PR× = 0		××PR× = 1	
			IE = 1	IE = 0	IE = 1	IE = 0
Non-maskable interrupt		–	–	–	–	–
Maskable interrupt	ISP = 0	√	√	–	–	–
	ISP = 1	√	√	–	√	–
Software interrupt		√	√	–	√	–

Remarks 1. √: Multiple interrupt processing enable
–: Multiple interrupt processing disable

2. ISP and IE are flags included in the PSW.
ISP = 0: An interrupt with higher priority is currently being serviced.
ISP = 1: The interrupt request was not acknowledged or an interrupt with a lower priority is currently being serviced.
IE = 0: Interrupt request acknowledgement is disabled.
IE = 1: Interrupt request acknowledgement is enabled.

3. ××PR× is a flag included in PR0L, PR0H, PR1L, and PR1H.
××PR× = 0: Higher priority level
××PR× = 1: Lower priority level

Figure 17-13. Example of Multiple Interrupt Processing (1/2)

Example 1. Multiple interrupts are acknowledged twice

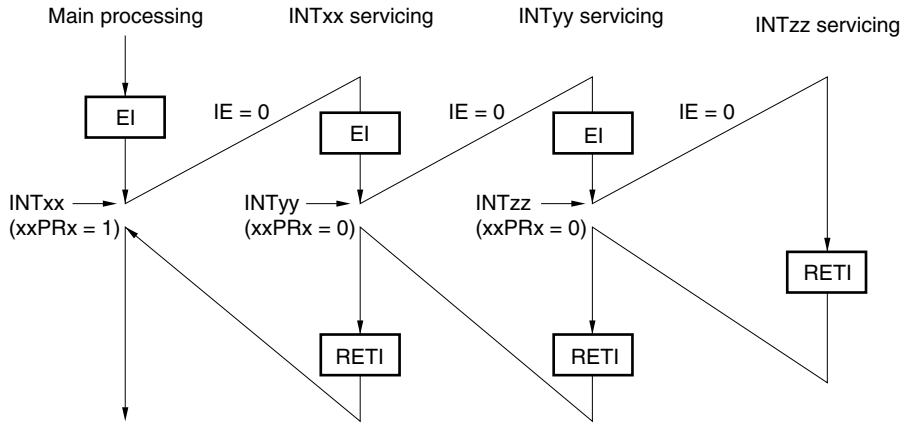

Two multiple interrupt requests INTyy and INTzz are acknowledged while interrupt INTxx is being serviced. Before each interrupt request is acknowledged, the EI instruction is always issued and the interrupt request is enabled.

Example 2. A multiple interrupt is not acknowledged because of its priority

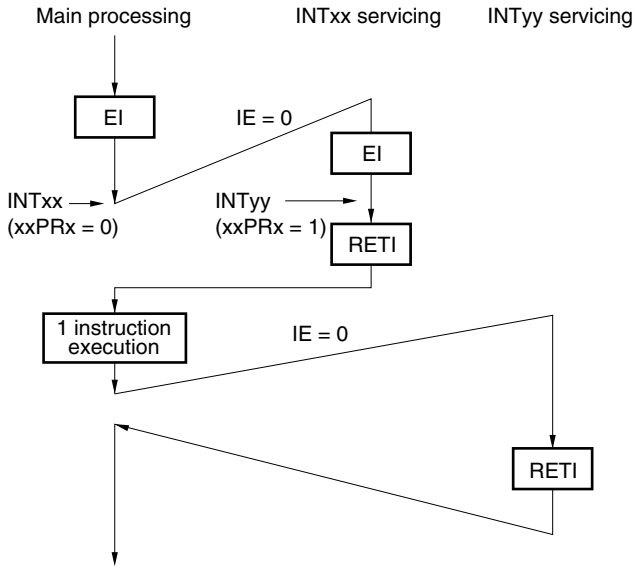

Interrupt request INTyy, which was generated while INTxx was being serviced, is not acknowledged for multiple interrupt processing because the priority of INTyy is lower than that of INTxx. INTyy is held pending and is acknowledged after one instruction of the main processing has been executed.

xxPRx = 0: Higher priority level
xxPRx = 1: Lower priority level
IE = 0: Interrupt request acknowledgement is disabled.

Figure 17-13. Example of Multiple Interrupt Processing (2/2)

Example 3. A multiple interrupt is not acknowledged because of interrupt disabled state

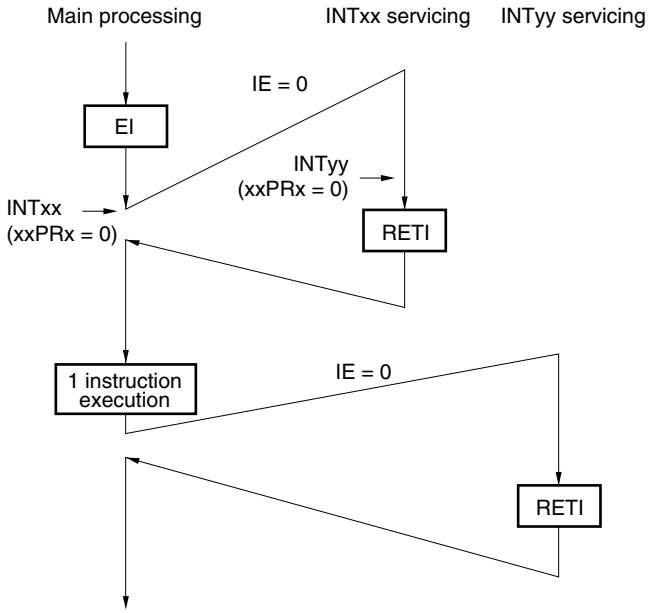

During the servicing of INTxx, other interrupts are not enabled (the EI instruction is not executed). Therefore, INTyy is not acknowledged for multiple interrupt processing. INTyy is held pending and is acknowledged after one instruction of the main processing has been executed.

xxPRx = 0: Higher priority level
IE = 0: Interrupt request acknowledgement is disabled.

17.4.5 Pending interrupt requests

There are some instructions that, even if an interrupt request is issued for them while another instruction is being executed, cause a request acknowledgement to be held pending until the end of execution of the next instruction. These instructions (instructions for which instruction requests are held pending) are listed below.

- MOV PSW, #byte
- MOV A, PSW
- MOV PSW, A
- MOV1 PSW.bit, CY
- MOV1 CY, PSW. bit
- AND1 CY, PSW. bit
- OR1 CY, PSW. bit
- XOR1 CY, PSW. bit
- SET1 PSW. bit
- CLR1 PSW. bit
- RETB
- RETI
- PUSH PSW
- POP PSW
- BT PSW. bit, $addr16
- BF PSW. bit, $addr16
- BTCLR PSW. bit, $addr16
- IE
- DI
- Manipulation instructions for IF0L, IF0H, IF1L, IF1H, MK0L, MK0H, MK1L, MK1H, PR0L, PR0H, PR1L, PR1H, EGP, and EGN registers.

Caution The BRK instruction is not one of the above-listed instructions. However, a software interrupt activated by executing the BRK instruction causes the IE flag to be cleared to 0. Therefore, even if a maskable interrupt request is generated during execution of the BRK instruction, the interrupt request is not acknowledged. However, non-maskable interrupts are acknowledged.

The timing at which interrupt requests are held pending is shown in Figure 17-14.

Figure 17-14. Pending Interrupt Requests

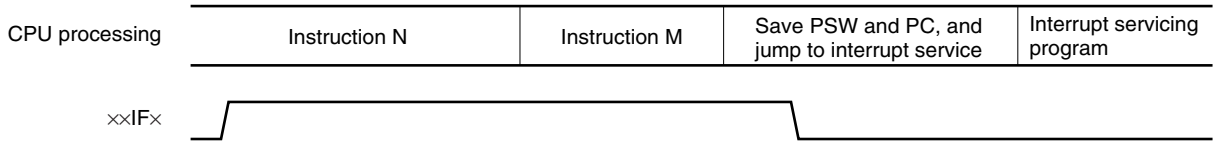

Remarks 1. Instruction N: Instruction for which interrupt request is held pending

2. Instruction M: Instruction other than instruction for which interrupt request is held pending

3. ××IF× (interrupt request) operation is not affected by the value of ××PR× (priority level).

CHAPTER 18 STANDBY FUNCTION

18.1 Standby Function and Configuration

The standby function is a function for reducing the power consumption of the system. The μPD780958 Subseries supports only the HALT mode.

The HALT mode is set when the HALT instruction is executed. In HALT mode, the CPU operating clock is stopped, while the system clock oscillator continues oscillating. Therefore, this mode is useful for resuming processing immediately when an interrupt request is generated or for an intermittent operation, such as a watch operation.

All the contents of registers, flags, and data memory immediately before entering the HALT mode are retained. The states of I/O port output latches and output buffers are also retained.

Caution Do not execute a STOP instruction since the μPD780958 Subseries does not support STOP mode.

★ **Figure 18-1. Standby Function**

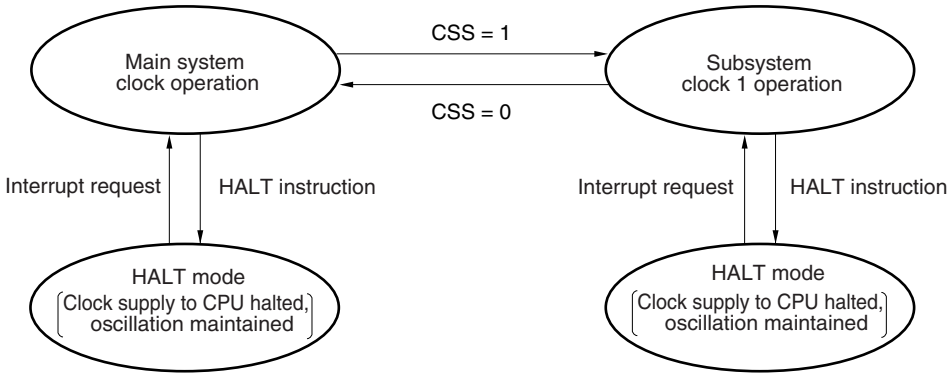

Remark CSS: Bit 4 of the processor clock control register (PCC)

18.2 Operation of Standby Function

18.2.1 Setting and operation status of HALT mode

The HALT mode is set by executing the HALT instruction.

The operation status in the HALT mode is shown in the table below.

Table 18-1. Operation Status in HALT Mode

Item	Operation Status in HALT Mode
Clock generator	Oscillation is enabled but clock supply to the CPU is stopped.
CPU	Operation stopped
Port (output latch)	Retains status prior to when HALT mode was set.
16-bit timer/event counter	Operable
8-bit timer	
Watchdog timer	
Sampling output timer/detector	
MR sampling function	
Serial interface	
LCD controller	
External interrupt request	

18.2.2 Releasing HALT mode

The HALT mode can be released by the following two sources.

(1) Release by unmasked interrupt request

The HALT mode is released upon generation of an unmasked interrupt request. If interrupt requests are enabled at this time, vectored interrupt servicing is performed. If interrupt requests are disabled, the instruction at the next address is executed.

Figure 18-2. Release of HALT Mode by Interrupt Request

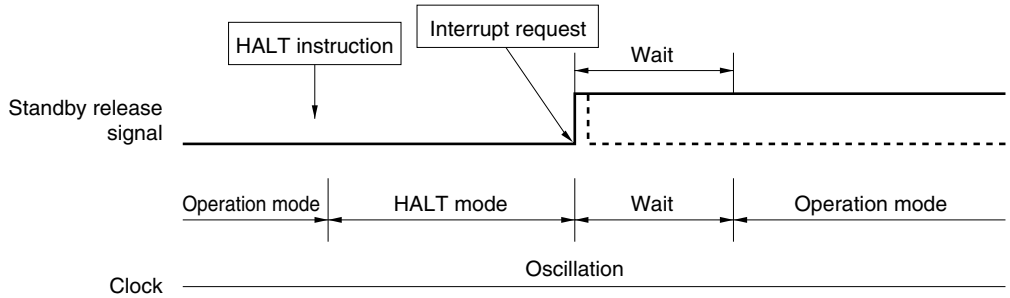

Remarks 1. The broken lines indicate the case where the interrupt request that has released the standby mode is acknowledged.

2. The wait time is as follows:

- When vectored interrupt servicing is performed: 8 to 9 clocks
- When vectored interrupt servicing is not performed: 2 to 3 clocks

★ **(2) Release by non-maskable interrupt request**

When a non-maskable interrupt request is generated, the HALT mode is released and vectored interrupt servicing is carried out, regardless of whether interrupt acknowledgement is enabled or disabled.

(3) Release by $\overline{\text{RESET}}$ input

$\overline{\text{RESET}}$ signal input releases the HALT mode. Execution branches to the reset vector address in the same manner as an ordinary reset operation, and program execution is started.

★ **Figure 18-3. Release of HALT Mode by $\overline{\text{RESET}}$ Input**

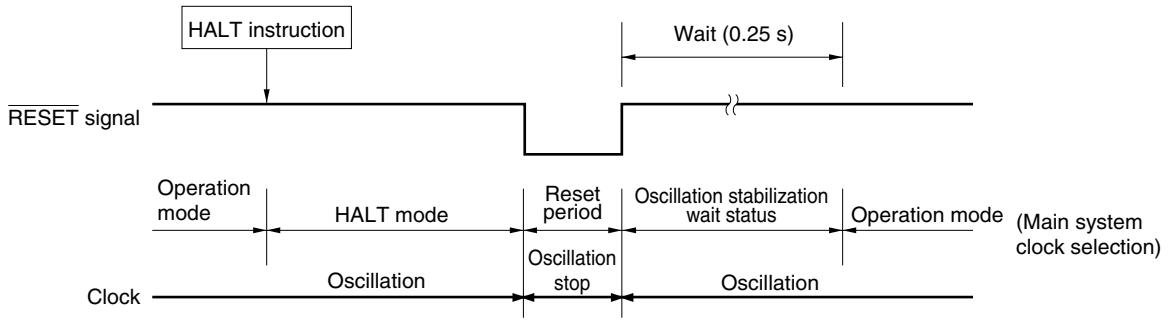

Caution Since the processor clock control register (PCC) is set to 04H after $\overline{\text{RESET}}$ signal generation, it is necessary to set PCC to 00H, 01H, or 02H at the beginning of the program. In this case, the time of one-instruction execution is required to switch the value of PCC.

Remark Figures in parentheses apply to operation with f_{CC} = 1.2 MHz, f_{XT1} = 32.768 kHz

Table 18-2. Operation After Release of HALT Mode

Releasing Source	××MK×	××PR×	IE	ISP	Operation
Maskable interrupt request	0	0	0	×	Executes next address instruction.
	0	0	1	×	Executes interrupt servicing.
	0	1	0	1	Executes next address instruction.
	0	1	×	0	
	0	1	1	1	Executes interrupt servicing.
	1	×	×	×	Maintains HALT mode.
$\overline{\text{RESET}}$ input	–	–	×	×	Reset processing

× : don't care

CHAPTER 19 RESET FUNCTION

The reset signal can be effected by the following two methods.

(1) External reset input from $\overline{\text{RESET}}$ pin
(2) Internal reset by inadvertent program loop detection by watchdog timer

Execution of the program is started from the addresses written to 0000H and 0001H when the $\overline{\text{RESET}}$ signal is input.

The reset function is effected when a low-level signal is input to the $\overline{\text{RESET}}$ pin or when an overflow occurs in the watchdog timer. As a result, each hardware enters the status shown in Table 19-1. Each pin goes into a high-impedance state while the $\overline{\text{RESET}}$ signal is input, and during the oscillation stabilization time immediately after the reset function has been released.

When a high-level signal is input to the $\overline{\text{RESET}}$ pin, the reset function is released and program execution is started after the oscillation stabilization time (0.25 s: with f_{XT1} = 32.768 kHz operation) has elapsed (see **Figures 19-2**, **19-3**, and **19-4**).

Regarding reset caused by watchdog timer overflow, after reset, reset is automatically released, and program execution starts following the lapse of the oscillation stabilization time (0.25 s: with f_{XT1} = 32.768 kHz operation). The watchdog timer overflow signal is output from the $\overline{\text{WDTOUT}}$ pin.

★ **Cautions 1. Input a low-level signal to the $\overline{\text{RESET}}$ pin for 10 μs or longer to execute an external reset. However, after reset following power application, input a low level to the $\overline{\text{RESET}}$ pin during the time required for the subsystem clock 1 oscillation to stabilize.**

2. Oscillation of the main system clock and subsystem clock 2 is stopped while the $\overline{\text{RESET}}$ signal is being input, but subsystem clock 1 oscillation is not.

★ **3. Since the processor clock control register (PCC) is set to 04H after $\overline{\text{RESET}}$ signal generation, it is necessary to set PCC to 00H, 01H, or 02H at the beginning of the program. In this case, the time of one-instruction execution is required to switch the value of PCC.**

Figure 19-1. Block Diagram of Reset Function

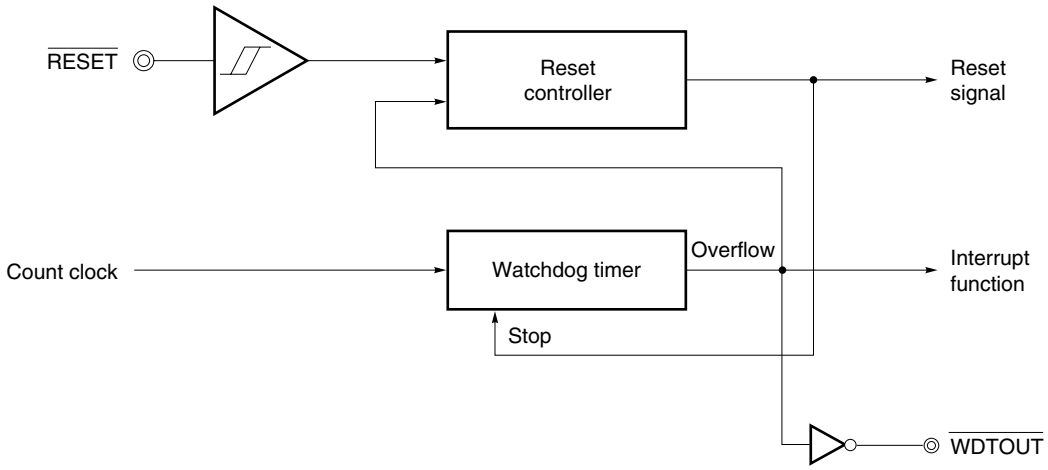

★ **Figure 19-2. Reset Timing by $\overline{\text{RESET}}$ Input**

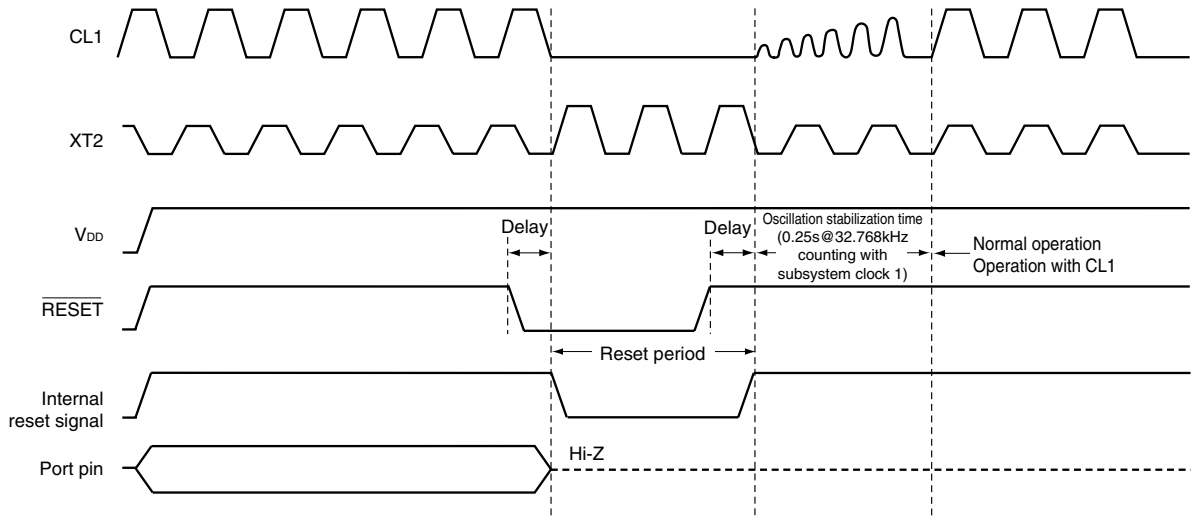

★ **Figure 19-3. Reset Timing by Watchdog Timer Overflow**

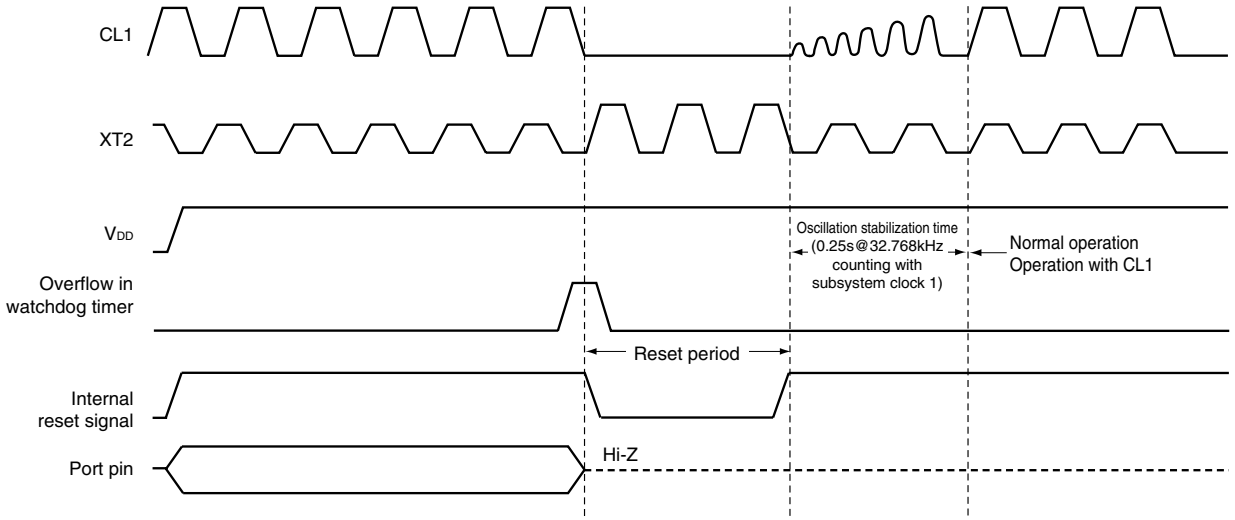

★ **Figure 19-4. Reset Timing After Power Application**

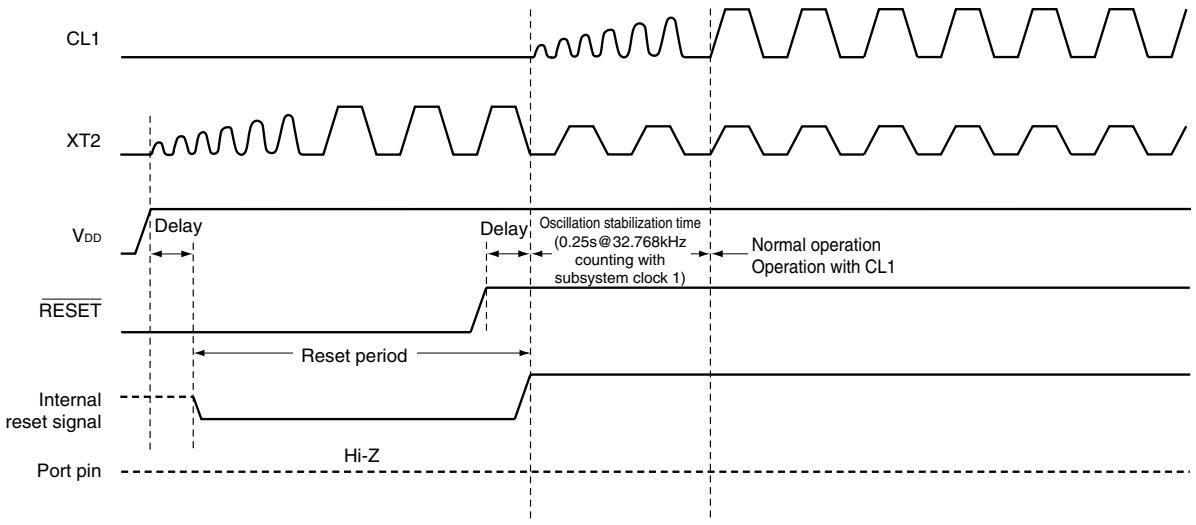

Table 19-1. Hardware Status After Reset (1/2)

Hardware		Status After Reset
Program counter (PC)[Note 1]		Contents of reset vector table (0000H, 0001H) are set.
Stack pointer (SP)		Undefined
Program status word (PSW)		02H
RAM	Data memory	Undefined[Note 2]
	General-purpose registers	Undefined[Note 2]
Ports (output latches)		00H
Port mode registers (PM0, PM2 to PM9)		FFH
Pull-up resistor option registers (PU0, PU2 to PU9)		00H
Processor clock control register (PCC)		04H[Note 3]
Clock output select register (CKS)		00H
SUB2 clock control register (CKC)		00H
Memory size switching register (IMS)		CFH[Note 4]
Internal expansion RAM size switching register (IXS)		0CH[Note 5]
16-bit timer/event counter 0	Timer counter 0 (TM0)	0000H
	Timer capture/compare registers 00, 01 (CR00, CR01)	Undefined
	Timer mode control register 0 (TMC0)	00H
	Prescaler mode register 0 (PRM0)	00H
	Capture/compare control register 0 (CRC0)	00H
	Timer output control register 0 (TOC0)	00H
16-bit timer/event counter 2	Timer counter 2 (TM2)	Undefined
	Timer compare register 2 (CR2)	0000H
	Timer mode control register 2 (TMC2)	00H
	Timer input control register 2 (TICT2)	00H
8-bit timers 80 to 83	Timer counters 80 to 83 (TM80 to TM83)	00H
	Compare registers 80 to 83 (CR80 to CR83)	00H
	Timer control registers 80 to 83 (TMC80 to TMC83)	00H

Notes 1. Only the contents of the PC among the hardware elements become undefined during reset input and oscillation stabilization wait. The other statuses do not differ from the status after reset above.

2. If the reset signal is input in the standby mode, the status before reset is retained.

3. Be sure to set PCC to 00H, 01H, or 02H at the beginning of the program.

4. Even though the initial value is CFH, it should be set to the following values for each microcontroller.
μPD780957(A): CCH
μPD780958(A): CFH (This is the initial value of IMS. IMS does not need to be set in the μPD780958(A).)

★ **5.** Even though the initial value is 0CH, use this register with a setting of 0AH.

Table 19-1. Hardware Status After Reset (2/2)

	Hardware		Status After Reset
	Watchdog timer	Mode register (WDTM)	00H
		Clock select register (WDCS)	00H
	Sampling output timer/detector	SMTD timer counters A0, B0 (TMSA0, TMSB0)	00H
		SMTD compare registers A0, B0 (CRSA0, CRSB0)	00H
		SMTD clock select registers A0, B0 (TCSA0, TCSB0)	00H
		SMTD control register 0 (TSM0)	00H
		SMTD sampling level setting register 0 (SMS0)	00H
		SMTD sampling pin status register 0 (SMD0)	00H
★	MR sampling	8-bit MR counter 0 (TMMR0)	00H
		MRTD compare register 0 (CRM0)	00H
		MRTD control register 0 (TCM0)	00H
		MRTD output control register 0 (TMM0)	00H
		MR sampling control register 0 (MRM0)	00H
	Serial interface UART2	Asynchronous serial interface mode register 2 (ASIM2)	00H
		Asynchronous serial interface function register 2 (ASIF2)	00H
		Asynchronous serial interface status register 2 (ASIS2)	00H
		Compare register 2 for baud rate generation (BRCR2)	00H
		UART pin switching register (UTCH0)	00H
		Transmit shift register 2 (TXS2)	FFH
		Receive buffer register 2 (RXB2)	
	Serial interface SIO3	Serial I/O shift register 3 (SIO3)	Undefined
★		Serial operation mode register 3 (CSIM3)	00H
	Real-time output function	RTO data registers 10, 11 (RTO10, RTO11)	00H
		RTO reload interrupt compare register 1 (RTC1)	00H
		RTO operation mode register 1 (RTM1)	00H
★	LCD controller/driver	LCD display mode register 0 (LCDM0)	00H
★		LCD clock control register 0 (LCDC0)	00H
		Port function control registers 7 to 9 (PF7 to PF9)	00H
	Interrupt	Request flag registers 0L, 0H, 1L, 1H (IF0L, IF0H, IF1L, IF1H)	00H
		Mask flag registers 0L, 0H, 1L, 1H (MK0L, MK0H, MK1L, MK1H)	FFH
		Priority specification flag registers 0L, 0H, 1L, 1H (PR0L, PR0H, PR1L, PR1H)	FFH
		External interrupt rising edge enable register (EGP)	00H
		External interrupt falling edge enable register (EGN)	00H

★ CHAPTER 20 μPD78F0958 (REFERENCE)

The μPD78F0958 is provided as the flash memory version of the μPD780958 Subseries.

The μPD78F0958 replaces the internal mask ROM of the μPD780958 with flash memory to which a program can be written, erased and overwritten while mounted on the substrate. Table 20-1 lists the differences between the μPD78F0958 and the mask ROM versions.

Table 20-1. Differences Between μPD78F0958 and Mask ROM Versions

Item	μPD78F0958	μPD780957(A)	μPD780958(A)
Internal ROM configuration	Flash memory	Mask ROM	
Internal ROM capacity	60 KB[Note]	48 KB	60 KB
Mask option to specify the on-chip pull-up resistors of P60 to P62 and $\overline{\text{RESET}}$ pins	Not possible	Possible	
Operation of overflow signal of watchdog timer	After reset by the watchdog timer, a high level is output for 20 μs (TYP.).	After reset by the watchdog timer, a low level is output for 20 μs (TYP.).	
IC pin	None	Available	
V_{PP} pin	Available	None	
Electrical specifications	For details, contact an NEC Electronics sales representative.		

Note The same capacity as the mask ROM versions can be specified by means of the memory size switching register (IMS).

Cautions 1. The μPD78F0958 is available only as an engineering sample. For details, contact an NEC Electronics sales representative.

2. Flash memory versions and mask ROM versions differ in their noise immunity and noise radiation. If replacing a flash memory version with a mask ROM version when changing from trial production to mass production, be sure to perform sufficient evaluation with the CS version (not ES version) of the mask ROM version.

20.1 Memory Size Switching Register

The μPD78F0958 allows users to select the internal memory capacity using the memory size switching register (IMS) so that the same memory map as that of the μPD780957(A) and 780958(A) with a different size internal memory capacity can be achieved.

IMS is set by an 8-bit memory manipulation instruction.

$\overline{\text{RESET}}$ input sets the value of IMS to CFH.

Caution Always set IMS to CCH or CFH as the program's initial value.

Figure 20-1. Format of Memory Size Switching Register (IMS)

Address: FFF0H After reset: CFH R/W

Symbol	7	6	5	4	3	2	1	0
IMS	RAM2	RAM1	RAM0	0	ROM3	ROM2	ROM1	ROM0

RAM2	RAM1	RAM0	Internal high-speed RAM capacity selection
1	1	0	1024 bytes
Other than above			Setting prohibited

ROM3	ROM2	ROM1	ROM0	Internal ROM capacity selection
1	1	0	0	48 KB
1	1	1	1	60 KB
Other than above				Setting prohibited

The IMS settings to obtain the same memory map as mask ROM versions are shown in Table 20-2.

Table 20-2. Memory Size Switching Register Settings

Target Mask ROM Versions	IMS Setting
μPD780957(A)	CCH
μPD780958(A)	CFH

Caution When using a mask ROM version, be sure to set IMS to the value indicated in Table 20-2.

20.2 Internal Expansion RAM Size Switching Register (IXS)

This register is used to set the internal expansion RAM capacity via software.

This register is set by using an 8-bit memory manipulation instruction.

$\overline{\text{RESET}}$ input sets the value of IXS to 0CH.

Caution Setting the default value of IXS (0CH) is prohibited. Be sure to initialize the value of this register to 0AH.

Figure 20-2. Format of Internal Expansion RAM Size Switching Register (IXS)

Address: FFF4H After reset: 0CH R/W

Symbol	7	6	5	4	3	2	1	0
IXS	0	0	0	IXRAM4	IXRAM3	IXRAM2	IXRAM1	IXRAM0

IXRAM4	IXRAM3	IXRAM2	IXRAM1	IXRAM0	Selects internal expansion RAM capacity
0	1	0	1	0	1024 bytes
Other than above					Setting prohibited

20.3 Flash Memory Programming

On-board writing of flash memory (with device mounted on target system) is supported.

On-board writing is performed after connecting a dedicated flash programmer (Flashpro III (part number: FL-PR3, PG-FP3), Flashpro IV (FL-PR4, PG-FP4)) to the host machine and target system.

Moreover, writing to flash memory can also be performed using a flash memory writing adapter connected to Flashpro III or Flashpro IV.

Remarks 1. FL-PR3 and FL-PR4 are products of Naito Densei Machida Mfg. Co., Ltd.

2. USB is supported only by Flashpro IV.

20.3.1 Selection of communication mode

Writing to flash memory is performed using Flashpro III or Flashpro IV and serial communication. Select the communication mode for writing from Table 20-3. For the selection of the communication mode, a format like the one shown in Figure 20-2 is used. The communication mode is selected with the V_{PP} pulse numbers shown in Table 20-3.

Table 20-3. Communication Mode List

Communication Mode	Number of Channels	Pins Used[Note]	Number of V_{PP} Pulses
3-wire serial I/O (SIO3)	1	P35/SI3 P36/SO3 P37/$\overline{\text{SCK3}}$	0
UART (UART2)	2	P05/INTP5/SMP0/RxD20 P20/TxD20	8
		P06/INTP6/RxD21 P21/TxD21	9

Note When the flash memory programming mode is entered, all pins that are not used for flash memory programming become the same status as the status immediately after reset. Therefore, when the external device connected to each port does not acknowledge the port status immediately after reset, pin handling such as connecting to V_{DD} via a resistor or connecting to V_{SS} via a resistor are required.

Cautions 1. Be sure to select the number of VPP pulses shown in Table 20-3 for the communication mode.

2. If performing write operations to flash memory with the UART communication mode, connect a 4.91 MHz resonator to the XT3 and XT4 pins, or input a 4.91 MHz external clock to the XT3 pin.

Figure 20-3. Communication Mode Selection Format

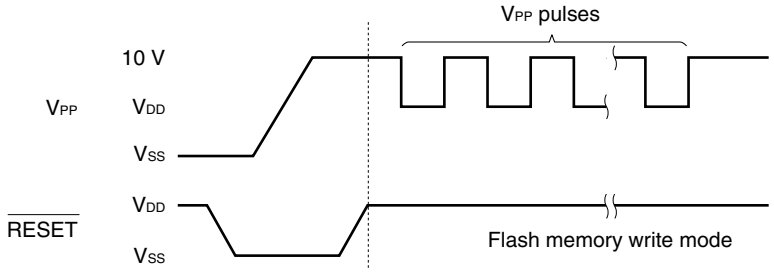

20.3.2 Flash memory programming function

Flash memory writing is performed via command and data transmit/receive operations using the selected communication mode. The main functions are listed in Table 20-4.

Table 20-4. Main Functions of Flash Memory Programming

Function	Description
Reset	Used to detect write stop and transmission synchronization.
Batch verify	Compares entire memory contents and input data.
Batch delete	Deletes the entire memory contents.
Batch blank check	Checks the deletion status of the entire memory.
High-speed write	Performs writing to flash memory according to write start address and number of write data (bytes).
Continuous write	Performs successive write operations using the data input by high-speed write operation.
Status	Checks the current operation mode and operation end.
Oscillation frequency setting	Inputs the resonator oscillation frequency information.
Erase time setting	Inputs the memory erase time.
Baud rate setting	Sets the transmission rate when the UART mode is used.
Silicon signature read	Outputs the device name, memory capacity, and device block information.

20.3.3 Connection of Flashpro III and Flashpro IV

Connection of the Flashpro III, Flashpro IV and the μPD78F0958 differs depending on the communication mode (3-wire serial I/O (SIO3) and UART (UART2). Each type of connection is shown in Figures 20-4 and 20-5.

Figure 20-4. Connection of Flashpro III and Flashpro IV Using 3-Wire Serial I/O (SIO3) Mode

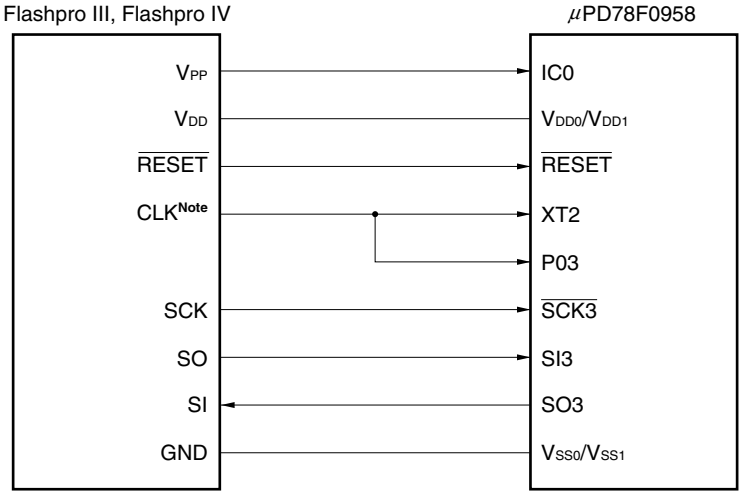

Note CLK = 1.0 to 5.0 MHz

Figure 20-5. Connection of Flashpro III and Flashpro IV Using UART (UART2) Mode

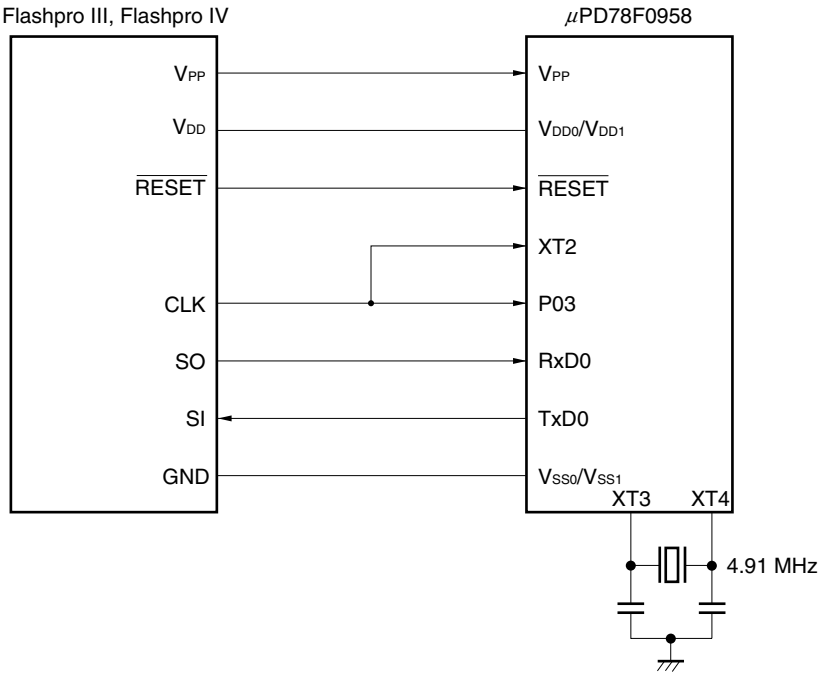

CHAPTER 21 INSTRUCTION SET

This chapter lists the instruction set for the μPD780958 Subseries. For details of the operation and machine language (instruction code) of each instruction, see the **78K/0 Series Instructions User's Manual (U12326E)**.

21.1 Conventions

21.1.1 Operand representation and description formats

In the operand field for each instruction, an operand is described according to the description format for operand representation of that instruction (for details, see the assembler specifications). Some operands may be described in two or more description formats. In this case, select one of them. Uppercase characters, #, !, $, and [ ] are keywords and must be described as is. The meanings of the symbols are as follows.

- #: Immediate data
- !: Absolute address
- $: Relative address
- [ ]: Indirect address

To describe immediate data, also describe an appropriate numeric value or label. To describe a label, be sure to use #, !, $, or [ ].

Register description formats r and rp for an operand can be described as a function name (such as X, A, or C) or absolute name (the name in parentheses in the table below, such as R0, R1, or R2).

Table 21-1. Operand Representation and Description Formats

Representation	Description Format
r	X (R0), A (R1), C (R2), B (R3), E (R4), D (R5), L (R6), H (R7)
rp	AX (RP0), BC (RP1), DE (RP2), HL (RP3)
sfr	Special-function register symbol[Note]
sfrp	Special-function register symbol (only even address of register that can be manipulated in 16-bit units)[Note]
saddr	FE20H to FF1FH Immediate data or label
saddrp	FE20H to FF1FH Immediate data or label (even address only)
addr16	0000H to FFFFH Immediate data or label (only even address for 16-bit transfer instruction)
addr11	0800H to 0FFFH Immediate data or label
addr5	0040H to 007FH Immediate data or label (even address only)
word	16-bit immediate data or label
byte	8-bit immediate data or label
bit	3-bit immediate data or label
RBn	RB0 to RB3

Note FFD0H to FFDFH cannot be addressed.

Remark For the symbols of the special-function registers, see **Table 3-3 List of Special-Function Registers**.

21.1.2 Description of operation column

A:	A register; 8-bit accumulator
X:	X register
B:	B register
C:	C register
D:	D register
E:	E register
H:	H register
L:	L register
AX:	AX register pair; 16-bit accumulator
BC:	BC register pair
DE:	DE register pair
HL:	HL register pair
PC:	Program counter
SP:	Stack pointer
PSW:	Program status word
CY:	Carry flag
AC:	Auxiliary carry flag
Z:	Zero flag
RBS:	Register bank select flag
IE:	Interrupt request enable flag
NMIS:	Non-maskable interrupt servicing flag
( ):	Memory contents indicated by contents of address or register in ( )
×H, ×L:	Higher 8 bits and lower 8 bits of 16-bit register
∧:	Logical product (AND)
∨:	Logical sum (OR)
∨:	Exclusive logical sum (exclusive OR)
—:	Inverted data
addr16:	16-bit immediate data or label
jdisp8:	Signed 8-bit data (displacement value)

21.1.3 Description of flag operation column

(Blank):	Not affected
0:	Cleared to 0
1:	Set to 1
×:	Set/cleared according to result
R:	Value saved before is restored

21.2 Operation List

Instruction Group	Mnemonic	Operand	Bytes	Clocks		Operation	Flag
				Note 1	Note 2		Z AC CY
8-bit data transfer	**MOV**	r, #byte	2	4	–	r←byte	
		saddr, #byte	3	6	7	(saddr)←byte	
		sfr, #byte	3	–	7	sfr←byte	
		A, r Note 3	1	2	–	A←r	
		r, A Note 3	1	2	–	r←A	
		A, saddr	2	4	5	A←(saddr)	
		saddr, A	2	4	5	(saddr)←A	
		A, sfr	2	–	5	A←sfr	
		sfr, A	2	–	5	sfr←A	
		A, !addr16	3	8	9	A←(addr16)	
		!addr16, A	3	8	9	(addr16)←A	
		PSW, #byte	3	–	7	PSW←byte	× × ×
		A, PSW	2	–	5	A←PSW	
		PSW, A	2	–	5	PSW←A	× × ×
		A, [DE]	1	4	5	A←(DE)	
		[DE], A	1	4	5	(DE)←A	
		A, [HL]	1	4	5	A←(HL)	
		[HL], A	1	4	5	(HL)←A	
		A, [HL+byte]	2	8	9	A←(HL+byte)	
		[HL+byte], A	2	8	9	(HL+byte)←A	
		A, [HL+B]	1	6	7	A←(HL+B)	
		[HL+B], A	1	6	7	(HL+B)←A	
		A, [HL+C]	1	6	7	A←(HL+C)	
		[HL+C], A	1	6	7	(HL+C)←A	

Notes 1. When the internal high-speed RAM area is accessed or when an instruction that does not access data is executed.

2. When an area other than the internal high-speed RAM area is accessed.

3. Except for r = A

Remark One clock of an instruction is equal to one CPU clock (f_{CPU}) selected by the processor clock control register (PCC).

Instruction Group	Mnemonic	Operand	Bytes	Clocks		Operation	Flag
				Note 1	Note 2		Z AC CY
8-bit data transfer	**XCH**	A, r Note 3	1	2	–	A↔r	
		A, saddr	2	4	6	A↔(saddr)	
		A, sfr	2	–	6	A↔sfr	
		A, !addr16	3	8	10	A↔(addr16)	
		A, [DE]	1	4	6	A↔(DE)	
		A, [HL]	1	4	6	A↔(HL)	
		A, [HL+byte]	2	8	10	A↔(HL+byte)	
		A, [HL+B]	2	8	10	A↔(HL+B)	
		A, [HL+C]	2	8	10	A↔(HL+C)	
16-bit data transfer	**MOVW**	rp, #word	3	6	–	rp←word	
		saddrp, #word	4	8	10	(saddrp)←word	
		sfrp, #word	4	–	10	sfrp←word	
		AX, saddrp	2	6	8	AX←(saddrp)	
		saddrp, AX	2	6	8	(saddrp)←AX	
		AX, sfrp	2	–	8	AX←sfrp	
		sfrp, AX	2	–	8	sfrp←AX	
		AX, rp Note 4	1	4	–	AX←rp	
		rp, AX Note 4	1	4	–	rp←AX	
		AX, !addr16	3	10	12	AX←(addr16)	
		!addr16, AX	3	10	12	(addr16)←AX	
	XCHW	AX, rp Note 4	1	4	–	AX↔rp	
8-bit operation	**ADD**	A, #byte	2	4	–	A, CY←A+byte	× × ×
		saddr, #byte	3	6	8	(saddr), CY←(saddr)+byte	× × ×
		A, r Note 3	2	4	–	A, CY←A+r	× × ×
		r, A	2	4	–	r, CY←r+A	× × ×
		A, saddr	2	4	5	A, CY←A+(saddr)	× × ×
		A, !addr16	3	8	9	A, CY←A+(addr16)	× × ×
		A, [HL]	1	4	5	A, CY←A+(HL)	× × ×
		A, [HL+byte]	2	8	9	A, CY←A+(HL+byte)	× × ×
		A, [HL+B]	2	8	9	A, CY←A+(HL+B)	× × ×
		A, [HL+C]	2	8	9	A, CY←A+(HL+C)	× × ×

Notes 1. When the internal high-speed RAM area is accessed or when an instruction that does not access data is executed.

2. When an area other than the internal high-speed RAM area is accessed.

3. Except for r = A

4. Only when rp = BC, DE, HL.

Remark One clock of an instruction is equal to one CPU clock (f_{CPU}) selected by the processor clock control register (PCC).

Instruction Group	Mnemonic	Operand	Bytes	Clocks		Operation	Flag		
				Note 1	Note 2		Z	AC	CY
8-bit data operation	**ADDC**	A, #byte	2	4	–	A, CY←A+byte+CY	×	×	×
		saddr, #byte	3	6	8	(saddr), CY←(saddr)+byte+CY	×	×	×
		A, r Note 3	2	4	–	A, CY←A+r+CY	×	×	×
		r, A	2	4	–	r, CY←r+A+CY	×	×	×
		A, saddr	2	4	5	A, CY←A+(saddr)+CY	×	×	×
		A, !addr16	3	8	9	A, CY←A+(addr16)+CY	×	×	×
		A, [HL]	1	4	5	A, CY←A+(HL)+CY	×	×	×
		A, [HL+byte]	2	8	9	A, CY←A+(HL+byte)+CY	×	×	×
		A, [HL+B]	2	8	9	A, CY←A+(HL+B)+CY	×	×	×
		A, [HL+C]	2	8	9	A, CY←A+(HL+C)+CY	×	×	×
	SUB	A, #byte	2	4	–	A, CY←A–byte	×	×	×
		saddr, #byte	3	6	8	(saddr), CY←(saddr)–byte	×	×	×
		A, r Note 3	2	4	–	A, CY←A–r	×	×	×
		r, A	2	4	–	r, CY←r–A	×	×	×
		A, saddr	2	4	5	A, CY←A–(saddr)	×	×	×
		A, !addr16	3	8	9	A, CY←A–(addr16)	×	×	×
		A, [HL]	1	4	5	A, CY←A–(HL)	×	×	×
		A, [HL+byte]	2	8	9	A, CY←A–(HL+byte)	×	×	×
		A, [HL+B]	2	8	9	A, CY←A–(HL+B)	×	×	×
		A, [HL+C]	2	8	9	A, CY←A–(HL+C)	×	×	×
	SUBC	A, #byte	2	4	–	A, CY←A–byte–CY	×	×	×
		saddr, #byte	3	6	8	(saddr), CY←(saddr)–byte–CY	×	×	×
		A, r Note 3	2	4	–	A, CY←A–r–CY	×	×	×
		r, A	2	4	–	r, CY←r–A–CY	×	×	×
		A, saddr	2	4	5	A, CY←A–(saddr)–CY	×	×	×
		A, !addr16	3	8	9	A, CY←A–(addr16)–CY	×	×	×
		A, [HL]	1	4	5	A, CY←A–(HL)–CY	×	×	×
		A, [HL+byte]	2	8	9	A, CY←A–(HL+byte)–CY	×	×	×
		A, [HL+B]	2	8	9	A, CY←A–(HL+B)–CY	×	×	×
		A, [HL+C]	2	8	9	A, CY←A–(HL+C)–CY	×	×	×

Notes 1. When the internal high-speed RAM area is accessed or when an instruction that does not access data is executed.

2. When an area other than the internal high-speed RAM area is accessed.

3. Except for r = A

Remark One clock of an instruction is equal to one CPU clock (f_{CPU}) selected by the processor clock control register (PCC).

Instruction Group	Mnemonic	Operand	Bytes	Clocks		Operation	Flag
				Note 1	Note 2		Z AC CY
8-bit operation	**AND**	A, #byte	2	4	–	A←A ∧ byte	×
		saddr, #byte	3	6	8	(saddr)←(saddr) ∧ byte	×
		A, r Note 3	2	4	–	A←A ∧ r	×
		r, A	2	4	–	r←r ∧ A	×
		A, saddr	2	4	5	A←A ∧ (saddr)	×
		A, !addr16	3	8	9	A←A ∧ (addr16)	×
		A, [HL]	1	4	5	A←A ∧ (HL)	×
		A, [HL+byte]	2	8	9	A←A ∧ (HL+byte)	×
		A, [HL+B]	2	8	9	A←A ∧ (HL+B)	×
		A, [HL+C]	2	8	9	A←A ∧ (HL+C)	×
	OR	A, #byte	2	4	–	A←A ∨ byte	×
		saddr, #byte	3	6	8	(saddr)←(saddr) ∨ byte	×
		A, r Note 3	2	4	–	A←A ∨ r	×
		r, A	2	4	–	r←r ∨ A	×
		A, saddr	2	4	5	A←A ∨ (saddr)	×
		A, !addr16	3	8	9	A←A ∨ (addr16)	×
		A, [HL]	1	4	5	A←A ∨ (HL)	×
		A, [HL+byte]	2	8	9	A←A ∨ (HL+byte)	×
		A, [HL+B]	2	8	9	A←A ∨ (HL+B)	×
		A, [HL+C]	2	8	9	A←A ∨ (HL+C)	×
	XOR	A, #byte	2	4	–	A←A ∨̄ byte	×
		saddr, #byte	3	6	8	(saddr)←(saddr) ∨̄ byte	×
		A, r Note 3	2	4	–	A←A ∨̄ r	×
		r, A	2	4	–	r←r ∨̄ A	×
		A, saddr	2	4	5	A←A ∨̄ (saddr)	×
		A, !addr16	3	8	9	A←A ∨̄ (addr16)	×
		A, [HL]	1	4	5	A←A ∨̄ (HL)	×
		A, [HL+byte]	2	8	9	A←A ∨̄ (HL+byte)	×
		A, [HL+B]	2	8	9	A←A ∨̄ (HL+B)	×
		A, [HL+C]	2	8	9	A←A ∨̄ (HL+C)	×

Notes 1. When the internal high-speed RAM area is accessed or when an instruction that does not access data is executed.

2. When an area other than the internal high-speed RAM area is accessed.

3. Except for r = A

Remark One clock of an instruction is equal to one CPU clock (f_{CPU}) selected by the processor clock control register (PCC).

Instruction Group	Mnemonic	Operand	Bytes	Clocks		Operation	Flag
				Note 1	Note 2		Z AC CY
8-bit operation	**CMP**	A, #byte	2	4	–	A–byte	× × ×
		saddr, #byte	3	6	8	(saddr)–byte	× × ×
		A, r Note 3	2	4	–	A–r	× × ×
		r, A	2	4	–	r–A	× × ×
		A, saddr	2	4	5	A–(saddr)	× × ×
		A, !addr16	3	8	9	A–(addr16)	× × ×
		A, [HL]	1	4	5	A–(HL)	× × ×
		A, [HL+byte]	2	8	9	A–(HL+byte)	× × ×
		A, [HL+B]	2	8	9	A–(HL+B)	× × ×
		A, [HL+C]	2	8	9	A–(HL+C)	× × ×
16-bit operation	**ADDW**	AX, #word	3	6	–	AX, CY←AX+word	× × ×
	SUBW	AX, #word	3	6	–	AX, CY←AX–word	× × ×
	CMPW	AX, #word	3	6	–	AX–word	× × ×
Multiply/ divide	**MULU**	X	2	16	–	AXA×X	
	DIVUW	C	2	25	–	AX (quotient), C (remainder)←AX÷C	
Increment/ decrement	**INC**	r	1	2	–	rr+1	× ×
		saddr	2	4	6	(saddr)←(saddr)+1	× ×
	DEC	r	1	2	–	r←r–1	× ×
		saddr	2	4	6	(saddr)←(saddr)–1	× ×
	INCW	rp	1	4	–	rp←rp+1	
	DECW	rp	1	4	–	rp←rp–1	
Rotate	**ROR**	A, 1	1	2	–	(CY, A_7←A_0, A_{m-1}←A_m) × 1	×
	ROL	A, 1	1	2	–	(CY, A_0←A_7, A_{m+1}←A_m) × 1	×
	RORC	A, 1	1	2	–	(CY, A_0, A_7←CY, A_{m-1}←A_m) × 1	×
	ROLC	A, 1	1	2	–	(CY, A_7, A_0←CY, A_{m+1}←A_m) × 1	×
	ROR4	[HL]	2	10	12	A_{3-0}←$(HL)_{3-0}$, $(HL)_{7-4}$←A_{3-0}, $(HL)_{3-0}$←$(HL)_{7-4}$	
	ROL4	[HL]	2	10	12	A_{3-0}←$(HL)_{7-4}$, $(HL)_{3-0}$←A_{3-0}, $(HL)_{7-4}$←$(HL)_{3-0}$	
BCD adjustment	**ADJBA**		2	4	–	Decimal Adjust Accumulator after Addition	× × ×
	ADJBS		2	4	–	Decimal Adjust Accumulator after Subtract	× × ×

Notes 1. When the internal high-speed RAM area is accessed or when an instruction that does not access data is executed.

2. When an area other than the internal high-speed RAM area is accessed.

3. Except for r = A

Remark One clock of an instruction is equal to one CPU clock (f_{CPU}) selected by the processor clock control register (PCC).

Instruction Group	Mnemonic	Operand	Bytes	Clocks		Operation	Flag
				Note 1	Note 2		Z AC CY
Bit manipulation	**MOV1**	CY, saddr.bit	3	6	7	CY←(saddr.bit)	×
		CY, sfr.bit	3	–	7	CY←sfr.bit	×
		CY, A.bit	2	4	–	CY←A.bit	×
		CY, PSW.bit	3	–	7	CY←PSW.bit	×
		CY, [HL].bit	2	6	7	CY←(HL).bit	×
		saddr.bit, CY	3	6	8	(saddr.bit)←CY	
		sfr.bit, CY	3	–	8	sfr.bit←CY	
		A.bit, CY	2	4	–	A.bit←CY	
		PSW.bit, CY	3	–	8	PSW.bit←CY	× ×
		[HL].bit, CY	2	6	8	(HL).bit←CY	
	AND1	CY, saddr.bit	3	6	7	CY←CY ∧ (saddr.bit)	×
		CY, sfr.bit	3	–	7	CY←CY ∧ sfr.bit	×
		CY, A.bit	2	4	–	CY←CY ∧ A.bit	×
		CY, PSW.bit	3	–	7	CY←CY ∧ PSW.bit	×
		CY, [HL].bit	2	6	7	CY←CY ∧ (HL).bit	×
	OR1	CY, saddr.bit	3	6	7	CY←CY ∨ (saddr.bit)	×
		CY, sfr.bit	3	–	7	CY←CY ∨ sfr.bit	×
		CY, A.bit	2	4	–	CY←CY ∨ A.bit	×
		CY, PSW.bit	3	–	7	CY←CY ∨ PSW.bit	×
		CY, [HL].bit	2	6	7	CY←CY ∨ (HL).bit	×
	XOR1	CY, saddr.bit	3	6	7	CY←CY ⊻ (saddr.bit)	×
		CY, sfr.bit	3	–	7	CY←CY ⊻ sfr.bit	×
		CY, A.bit	2	4	–	CY←CY ⊻ A.bit	×
		CY, PSW.bit	3	–	7	CY←CY ⊻ PSW.bit	×
		CY, [HL].bit	2	6	7	CY←CY ⊻ (HL).bit	×
	SET1	saddr.bit	2	4	6	(saddr.bit)←1	
		sfr.bit	3	–	8	sfr.bit←1	
		A.bit	2	4	–	A.bit←1	
		PSW.bit	2	–	6	PSW.bit←1	× × ×
		[HL].bit	2	6	8	(HL).bit←1	

Notes 1. When the internal high-speed RAM area is accessed or when an instruction that does not access data is executed.

2. When an area other than the internal high-speed RAM area is accessed.

Remark One clock of an instruction is equal to one CPU clock (f_{CPU}) selected by the processor clock control register (PCC).

Instruction Group	Mnemonic	Operand	Bytes	Clocks		Operation	Flag
				Note 1	Note 2		Z AC CY
Bit manipulation	**CLR1**	saddr.bit	2	4	6	(saddr.bit)←0	
		sfr.bit	3	–	8	sfr.bit←0	
		A.bit	2	4	–	A.bit←0	
		PSW.bit	2	–	6	PSW.bit←0	× × ×
		[HL].bit	2	6	8	(HL).bit←0	
	SET1	CY	1	2	–	CY←1	1
	CLR1	CY	1	2	–	CY←0	0
	NOT1	CY	1	2	–	CY←$\overline{CY}$	×
Call/ return	**CALL**	!addr16	3	7	–	(SP–1)←(PC+3)$_H$, (SP–2)←(PC+3)$_L$, PC←addr16, SP←SP–2	
	CALLF	!addr11	2	5	–	(SP–1)←(PC+2)$_H$, (SP–2)←(PC+2)$_L$, PC$_{15-11}$←00001, PC$_{10-0}$←addr11, SP←SP–2	
	CALLT	[addr5]	1	6	–	(SP–1)←(PC+1)$_H$, (SP–2)←(PC+1)$_L$, PC$_H$←(00000000, addr5+1), PC$_L$←(00000000, addr5+1), SP←SP–2	
	BRK		1	6	–	(SP–1)←PSW, (SP–2)←(PC+1)$_H$, (SP–3)←(PC+1)$_L$, PC$_H$←(003FH), PC$_L$←(003EH), SP←SP–3, IE←0	
	RET		1	6	–	PC$_H$←(SP+1), PC$_L$←(SP), SP←SP+2	
	RETI		1	6	–	PC$_H$←(SP+1), PC$_L$←(SP), PSW←(SP+2), SP←SP+3, NMIS←0	R R R
	RETB		1	6	–	PC$_H$←(SP+1), PC$_L$←(SP), PSW←(SP+2), SP←SP+3	R R R
Stack manipulation	**PUSH**	PSW	1	2	–	(SP–1)←PSW, SP←SP–1	
		rp	1	4	–	(SP–1)←rp$_H$, (SP–2)←rp$_L$, SP←SP–2	
	POP	PSW	1	2	–	PSW←(SP), SP←SP+1	R R R
		rp	1	4	–	rp$_H$←(SP+1), rp$_L$←(SP), SP←SP+2	
	MOVW	SP, #word	4	–	10	SP←word	
		SP, AX	2	–	8	SP←AX	
		AX, SP	2	–	8	AX←SP	

Notes 1. When the internal high-speed RAM area is accessed or when an instruction that does not access data is executed.

2. When an area other than the internal high-speed RAM area is accessed.

Remark One clock of an instruction is equal to one CPU clock (f_{CPU}) selected by the processor clock control register (PCC).

Instruction Group	Mnemonic	Operand	Bytes	Clocks		Operation	Flag
				Note 1	Note 2		Z AC CY
Unconditional branch	**BR**	!addr16	3	6	–	PC←addr16	
		$addr16	2	6	–	PC←PC+2+jdisp8	
		AX	2	8	–	PC_H←A, PC_L←X	
Conditional branch	**BC**	$addr16	2	6	–	PC←PC+2+jdisp8 if CY = 1	
	BNC	$addr16	2	6	–	PC←PC+2+jdisp8 if CY = 0	
	BZ	$addr16	2	6	–	PC←PC+2+jdisp8 if Z = 1	
	BNZ	$addr16	2	6	–	PC←PC+2+jdisp8 if Z = 0	
	BT	saddr.bit, $addr16	3	8	9	PC←PC+3+jdisp8 if (saddr.bit) = 1	
		sfr.bit, $addr16	4	–	11	PC←PC+4+jdisp8 if sfr.bit = 1	
		A.bit, $addr16	3	8	–	PC←PC+3+jdisp8 if A.bit = 1	
		PSW.bit, $addr16	3	–	9	PC←PC+3+jdisp8 if PSW.bit = 1	
		[HL].bit, $addr16	3	10	11	PC←PC+3+jdisp8 if (HL).bit = 1	
	BF	saddr.bit, $addr16	4	10	11	PC←PC+4+jdisp8 if (saddr.bit) = 0	
		sfr.bit, $addr16	4	–	11	PC←PC+4+jdisp8 if sfr.bit = 0	
		A.bit, $addr16	3	8	–	PC←PC+3+jdisp8 if A.bit = 0	
		PSW.bit, $addr16	4	–	11	PC←PC+4+jdisp8 if PSW.bit = 0	
		[HL].bit, $addr16	3	10	11	PC←PC+3+jdisp8 if (HL).bit = 0	
	BTCLR	saddr.bit, $addr16	4	10	12	PC←PC+4+jdisp8 if (saddr.bit) = 1 then reset (saddr.bit)	
		sfr.bit, $addr16	4	–	12	PC←PC+4+jdisp8 if sfr.bit = 1 then reset sfr.bit	
		A.bit, $addr16	3	8	–	PC←PC+3+jdisp8 if A.bit = 1 then reset A.bit	
		PSW.bit, $addr16	4	–	12	PC←PC+4+jdisp8 if PSW.bit = 1 then reset PSW.bit	× × ×
		[HL].bit, $addr16	3	10	12	PC←PC+3+jdisp8 if (HL).bit = 1 then reset (HL).bit	

Notes 1. When the internal high-speed RAM area is accessed or when an instruction that does not access data is executed.

2. When an area other than the internal high-speed RAM area is accessed.

Remark One clock of an instruction is equal to one CPU clock (f_{CPU}) selected by the processor clock control register (PCC).

Instruction Group	Mnemonic	Operand	Bytes	Clocks		Operation	Flag
				Note 1	**Note 2**		Z AC CY
Conditional branch	**DBNZ**	B, $addr16	2	6	–	B←B–1, then PC←PC+2+jdisp8 if B ≠ 0	
		C, $addr16	2	6	–	C←C–1, then PC←PC+2+jdisp8 if C ≠ 0	
		saddr, $addr16	3	8	10	(saddr)←(saddr)–1, then PC←PC+3+jdisp8 if (saddr) ≠ 0	
CPU control	**SEL**	RBn	2	4	–	RBS1, 0←n	
	NOP		1	2	–	No Operation	
	EI		2	–	6	IE←1 (Enable Interrupt)	
	DI		2	–	6	IE←1 (Disable Interrupt)	
	HALT		2	6	–	Set HALT Mode	

Notes 1. When the internal high-speed RAM area is accessed or when an instruction that does not access data is executed.

2. When an area other than the internal high-speed RAM area is accessed.

Remark One clock of an instruction is equal to one CPU clock (f_{CPU}) selected by the processor clock control register (PCC).

21.3 Instruction List by Addressing

(1) 8-bit instructions

MOV, XCH, ADD, ADDC, SUB, SUBC, AND, OR, XOR, CMP, MULU, DIVUW, INC, DEC, ROR, ROL, RORC, ROLC, ROR4, ROL4, PUSH, POP, DBNZ

2nd Operand / 1st Operand	#byte	A	r[Note]	sfr	saddr	!addr16	PSW	[DE]	[HL]	[HL+byte] [HL+B] [HL+C]	$addr16	1	None
A	ADD ADDC SUB SUBC AND OR XOR CMP		MOV XCH ADD ADDC SUB SUBC AND OR XOR CMP	MOV XCH	MOV XCH ADD ADDC SUB SUBC AND OR XOR CMP	MOV XCH ADD ADDC SUB SUBC AND OR XOR CMP	MOV	MOV XCH	MOV XCH ADD ADDC SUB SUBC AND OR XOR CMP	MOV XCH ADD ADDC SUB SUBC AND OR XOR CMP		ROR ROL RORC ROLC	
r	MOV	MOV ADD ADDC SUB SUBC AND OR XOR CMP											INC DEC
B, C											DBNZ		
sfr	MOV	MOV											
saddr	MOV ADD ADDC SUB SUBC AND OR XOR CMP	MOV									DBNZ		INC DEC
!addr16		MOV											
PSW	MOV	MOV											PUSH POP
[DE]		MOV											
[HL]		MOV											ROR4 ROL4
[HL+byte] [HL+B] [HL+C]		MOV											
X													MULU
C													DIVUW

Note Except for r = A

(2) 16-bit instructions

MOVW, XCHW, ADDW, SUBW, CMPW, PUSH, POP, INCW, DECW

1st Operand \ 2nd Operand	#word	AX	rp[Note]	sfrp	saddrp	!addr16	SP	None
AX	ADDW SUBW CMPW		MOVW XCHW	MOVW	MOVW	MOVW	MOVW	
rp	MOVW	MOVW[Note]						INCW DECW PUSH POP
sfrp	MOVW	MOVW						
saddrp	MOVW	MOVW						
!addr16		MOVW						
SP	MOVW	MOVW						

Note Only when rp = BC, DE, HL

(3) Bit manipulation instructions

MOV1, AND1, OR1, XOR1, SET1, CLR1, NOT1, BT, BF, BTCLR

1st Operand \ 2nd Operand	A.bit	sfr.bit	saddr.bit	PSW.bit	[HL].bit	CY	$addr16	None
A.bit						MOV1	BT BF BTCLR	SET1 CLR1
sfr.bit						MOV1	BT BF BTCLR	SET1 CLR1
saddr.bit						MOV1	BT BF BTCLR	SET1 CLR1
PSW.bit						MOV1	BT BF BTCLR	SET1 CLR1
[HL].bit						MOV1	BT BF BTCLR	SET1 CLR1
CY	MOV1 AND1 OR1 XOR1	MOV1 AND1 OR1 XOR1	MOV1 AND1 OR1 XOR1	MOV1 AND1 OR1 XOR1	MOV1 AND1 OR1 XOR1			SET1 CLR1 NOT1

(4) Call/branch instructions

CALL, CALLF, CALLT, BR, BC, BNC, BZ, BNZ, BT, BF, BTCLR, DBNZ

1st Operand \ 2nd Operand	AX	!addr16	!addr11	[addr5]	$addr16
Basic instructions	BR	CALL BR	CALLF	CALLT	BR BC BNC BZ BNZ
Compound instruction					BT BF BTCLR DBNZ

(5) Other instructions

ADJBA, ADJBS, BRK, RET, RETI, RETB, SEL, NOP, EI, DI, HALT

★

CHAPTER 22 SUB-HALT TEST PROGRAM

22.1 Sub-HALT Test Program Overview

The μPD780957(A) and 780958(A) feature a considerably lower current consumption compared with existing products. In the HALT mode during subsystem clock 1 operation, the current consumption is 4.0 μA (MAX.) (T_A = -40 to +60°C), which is approximately one fourth the level of existing products, so that there is the risk that defective samples may get mixed in when conventional shipment screening methods are used. Shipment screening in the same environment as the actual operation environment is made possible through the incorporation of the sub-HALT current test program (program that reflects the check items listed in the Verification Form in section 22.3) in the user program, thereby enabling a stable supply of acceptable samples.

During user program tape out, be sure to verify the check items (check off each item in the Judgment column) on the Verification Form shown in section 22.3, and after inputting any other required items, submit the Verification Form to an NEC Electronics sales representative or authorized NEC Electronics distributor (copies of the Verification Form can be made).

22.2 Sub-HALT Test Program Flowchart

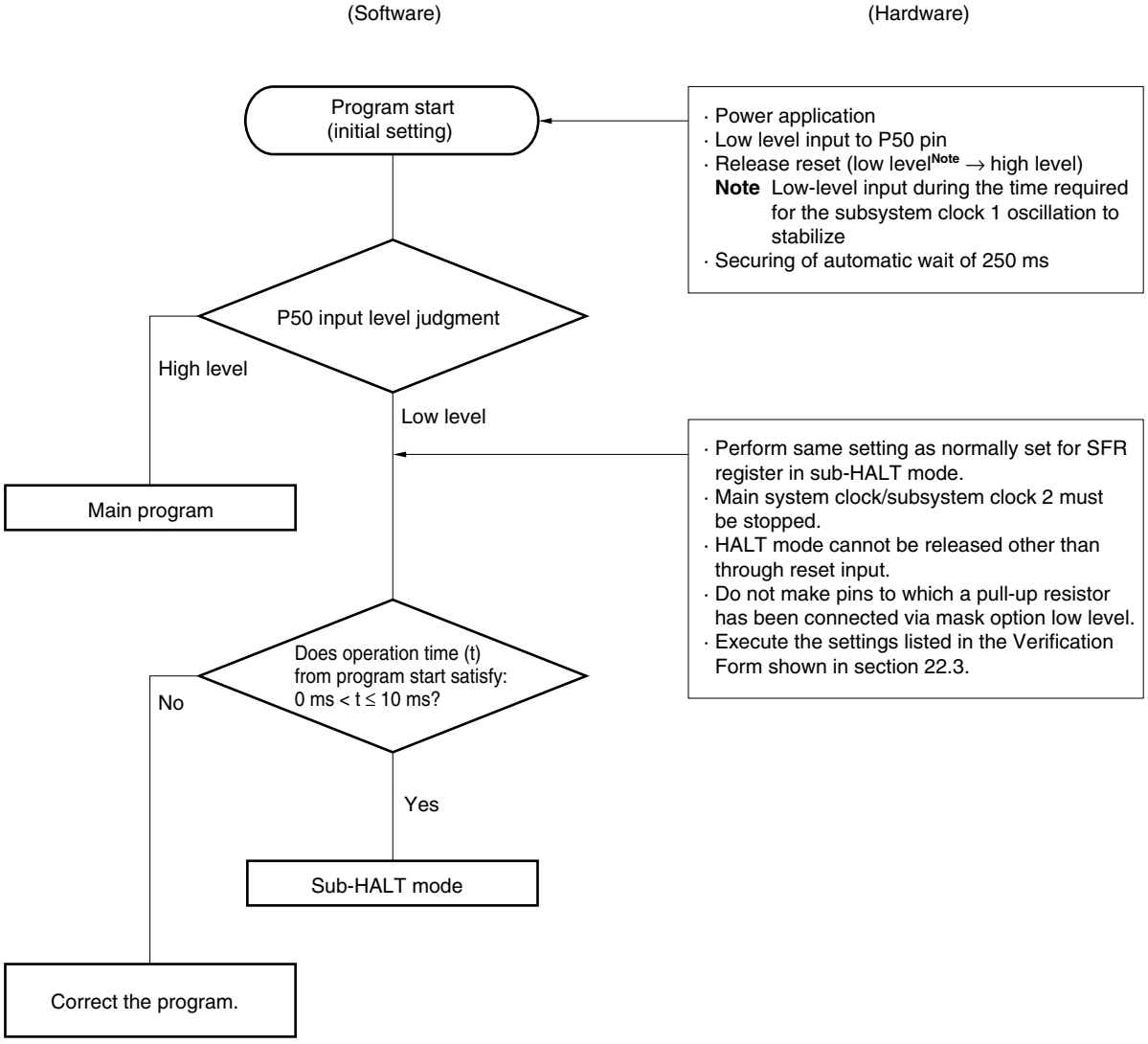

22.3 Verification Form

The following check items were reflected in the Verification and ROM Tape Out Program on _____ (MMDDYY).

Your Company Name: _____

Section Name: _____

Your Name: _____

Code No.: _____

<Sub-HALT Current Test Program Check Items>

Check the following items when preparing a program.

Check Items		Judgment
1	Sub-HALT current test program is inserted.	
2	After P50 pin reset has been released by a low level, sub-HALT mode is entered following the lapse of time <T> such that 250 ms (oscillation stabilization time) < T ≤ 260 ms. At this time, the main system clock and subsystem clock 2 (XT3/XT4) must be stopped.	
3	The setting values of the SFR registers during sub-HALT execution of the sub-HALT current test program and the normal setting values of the SFR registers during sub-HALT must be the same. (Except status flags)	
4	Once the sub-HALT mode has been entered, it is not possible to release the sub-HALT mode other than through reset input (possible only for the $\overline{\text{RESET}}$ pin). When using a watchdog timer during normal operation, start the sub-HALT current test program prior to setting the watchdog timer.	
5	The status of pins to which a pull-up resistor has been connected via mask option or software pull-up instruction must not be low-level output.	
6	Do not use read instructions for high-impedance (refer to description below) pins. Reason: Because the sub-HALT current cannot be stably measured.	
7	The status of the pins (P00 to P06, P22 to P27, P30 to P32, P35, P37, P50) for high-/low-level input in the sub-HALT current test program must be the input status.	
8	Verify the operation of the sub-HALT current test program using an in-circuit emulator.	

<Status of pins during sub-HALT current testing during shipment inspection>

Pin Name	Pin Level During Testing	Pin Status	Pin Name	Pin Level During Testing	Pin Status
P00 to P06	High-level input	Input mode	P50	Low-level input	Input mode
P20, P21	Hi-Z	Don't care	P51 to P57	Hi-Z	Don't care
P22 to P27	Low-level input	Input mode	P60 to P67	Hi-Z	Don't care
P30 to P32 P35, P37	Low-level input	Input mode	P70 to P77	Hi-Z	Don't care
P33, P34, P36	Hi-Z	Don't care	P80 to P87	Hi-Z	Don't care
P40 to P47	Hi-Z	Don't care	P90 to P95	Hi-Z	Don't care

Cautions 1. Do not set P00 to P06, P22 to P27, P30 to P32, P35, P37, and P50 to the output mode. All other pins can be set to either the input mode or the output mode.

2. Do not set pins to which a pull-up resistor has been connected via a mask option or software pull-up to the output mode.

Remark Verification form flow

Customer	→	NEC Electronics sales representative or authorized NEC Electronics distributor	→	NEC Electronics applied engineering department (internal verification)	→	NEC Electronics design department

Absolute Maximum Ratings (T_A = 25°C)

Parameter	Symbol	Conditions		Ratings	Unit
Power supply voltage	V_{DD}			−0.3 to +3.6	V
Input voltage	V_{I1}	P00 to P06, P20 to P27, P30 to P37, P40 to P47, P50 to P57, P63 to P67, P70 to P77, P80 to P87, P90 to P95, X1, X2, XT1, XT2, $\overline{\text{RESET}}$		−0.3 to V_{DD} + 0.3[Note]	V
	V_{I2}	P60 to P62	N-ch open drain	−0.3 to +3.6	V
			With pull-up resistor	−0.3 to V_{DD} + 0.3[Note]	V
Output voltage	V_O			−0.3 to V_{DD} + 0.3	V
Output current, high	I_{OH}	Per pin		−10	mA
		Total for all pins		−30	mA
Output current, low	I_{OL}	Per pin		30	mA
		Total for all pins		160	mA
Operating ambient temperature	T_A			−40 to +80	°C
Storage temperature	T_{stg}			−60 to +150	°C

Note 3.6 V or below

Caution Product quality may suffer if the absolute maximum rating is exceeded even momentarily for any parameter. That is, the absolute maximum ratings are rated values at which the product is on the verge of suffering physical damage, and therefore the product must be used under conditions that ensure that the absolute maximum ratings are not exceeded.

Remark Unless specified otherwise, the characteristics of alternate-function pins are the same as those of port pins.

Main System Clock Oscillator Characteristics (T_A = –40 to +80°C, V_{DD} = 2.2 to 3.5 V)

Resonator	Parameter	Conditions	MIN.	TYP.	MAX.	Unit
RC resonator	Oscillation frequency (f_{CC})[Note 1]	Reference: C = 22 pF, R = 18 kΩ[Note 2]	1.0	1.2	1.5	MHz

Notes 1. Indicates only oscillator characteristics. For instruction execution time, refer to **AC Characteristics**.

2. The oscillation frequency is influenced by the electrical characteristics (wiring capacitance, wiring resistance, etc.) and temperature of the set. Moreover, as there are also variations in characteristics among devices, determine the optimum CR value based on evaluations performed on the set.

Subsystem Clock 1 Oscillator Characteristics (T_A = –40 to +80°C, V_{DD} = 2.2 to 3.5 V)

Resonator	Parameter	Conditions	MIN.	TYP.	MAX.	Unit
Crystal resonator	Oscillation frequency (f_{XT1})[Note 1]		32	32.768	35	kHz
	Oscillation stabilization time[Note 2]			3	10	s

Notes 1. Indicates only oscillator characteristics. For instruction execution time, refer to **AC Characteristics**.

2. Time required to stabilize oscillation after reset. Make sure the $\overline{\text{RESET}}$ pin holds a low level during this period.

Subsystem Clock 2 Oscillator Characteristics (T_A = –40 to +80°C, V_{DD} = 2.2 to 3.5 V)

Resonator	Parameter	MIN.	TYP.	MAX.	Unit
Crystal resonator	Oscillation frequency (f_{XT2})[Note 1]	4	4.2	5	MHz
	Oscillation stabilization time[Note 2]			20	ms
External clock	XT3 input frequency (f_{XT2})	4		5	MHz
	XT3 input high-/low-level width (t_{XT2H}, t_{XT2L})	85		100	ns

Notes 1. Indicates only oscillator characteristics. For instruction execution time, refer to **AC Characteristics**.

2. Time required to stabilize oscillation after reset.

Recommended Oscillator Constant

Subsystem Clock 1: Ceramic resonator (T_A = –40 to +85°C)

Manufacturer	Part Number	Frequency (kHz)	Recommended Circuit Constant		Oscillation Voltage Range		Remark
			C1	C2	MIN.(V)	MAX.(V)	
Seiko Epson Inc.	C-002RX	32.768	22	22	2.0	3.6	Rd = 330 kΩ
	MC-206						
	MC-306						

Caution The oscillator constant is a reference value based on evaluation in specific environments by the resonator manufacturer.

If the oscillator characteristics need to be optimized in the actual application, request the resonator manufacturer for evaluation on the implementation circuit.

Note that the oscillation voltage and oscillation frequency merely indicate the characteristics of the oscillator. Use the internal operation conditions of the μPD780958 Subseries within the specifications of the DC and AC characteristics.

DC Characteristics (T_A = –40 to +80°C, V_{DD} = 2.2 to 3.5 V)

Parameter	Symbol	Conditions		MIN.	TYP.	MAX.	Unit
Output current, high	I_{OH}	Per pin				–1	mA
		All pins				–15	
Output current, low	I_{OL}	Per pin				15	mA
		All pins				80	
Input voltage, high	V_{IH1}	P20, P21, P33, P34, P36, P40 to P47, P50 to P57, P60 to P67, P70 to P77, P80 to P87, P90 to P95		0.7V_{DD}		V_{DD}	V
	V_{IH2}	P00 to P06, P22 to P27, P30 to P32, P35, P37, $\overline{\text{RESET}}$		0.8V_{DD}		V_{DD}	V
	V_{IH3}	XT3, XT4		V_{DD} – 0.1		V_{DD}	V
Input voltage, low	V_{IL1}	P20, P21, P33, P34, P36, P40 to P47, P50 to P57, P60 to P67, P70 to P77, P80 to P87, P90 to P95		0		0.3V_{DD}	V
	V_{IL2}	P00 to P06, P22 to P27, P30 to P32, P35, P37, $\overline{\text{RESET}}$		0		0.2V_{DD}	V
	V_{IL3}	XT3, XT4		0		0.1	V
Output voltage, high	V_{OH1}	I_{OH} = –10 mA	P56/MRO0, P57/MRO1	V_{DD} – 0.5		V_{DD}	V
		I_{OH} = –2 mA		V_{DD} – 0.1		V_{DD}	V
		I_{OH} = –5 mA	P55	V_{DD} – 0.5		V_{DD}	V
		I_{OH} = –400 μA	P00 to P06, P20 to P27, P30 to P37, P40 to P47, P50 to P54, P63 to P67, P70 to P77, P80 to P87, P90 to P95	V_{DD} – 0.5		V_{DD}	V
Output voltage, low	V_{OL1}	I_{OL} = 5 mA	P60 to P62 (N-ch open drain)	0		0.5	V
		I_{OL} = 400 μA	P00 to P06, P20 to P27, P30 to P37, P40 to P47, P50 to P57, P63 to P67, P70 to P77, P80 to P87, P90 to P95, $\overline{\text{WDTOUT}}$	0		0.5	V
Power supply current[Note 1]	I_{DD1}	1.0 MHz RC oscillation operation mode[Note 2]	T_A = –40 to +60°C[Note 4]		230	400	μA
			T_A = +60 to +80°C[Note 5]			400	μA
	I_{DD2}	32.768 kHz crystal oscillation operation mode[Note 3]	T_A = –40 to +60°C[Note 4]		6.0	12.0	μA
			T_A = +60 to +80°C[Note 5]			18.0	μA
	I_{DD3}	32.768 kHz crystal oscillation HALT mode[Note 3]	T_A = –40 to +60°C[Note 6]		2.0	4.0	μA
			T_A = +60 to +80°C[Note 7]			8.0	μA
Subsystem clock 2 oscillation current	I_{SUB2}	CKC = 01H (When subsystem clock 2 oscillation enabled)			200	600	μA

Notes 1. Refers to the current flowing through the V_{DD0} and V_{DD1} pins. The current flowing through the LCD controller and ports is not included.

2. When PCC = 00H.

3. When the main system clock is stopped.

4. Only RAM during access (when subsystem clock 2 oscillation and all peripheral functions are stopped).

5. During RAM access and when all peripheral functions are operating (but when LCD operation and subsystem clock 2 oscillation are stopped).

6. When only the sampling output timer/detector and 8-bit timers 80 and 81 are operating (but when subsystem clock 2 oscillation is stopped).

7. When all peripheral functions are operating (but when LCD operation and subsystem clock 2 oscillation are stopped).

Remark Unless specified otherwise, the characteristics of alternate-function pins are the same as those of port pins.

DC Characteristics (T_A = –40 to +80°C, V_{DD} = 2.2 to 3.5 V)

Parameter	Symbol	Conditions		MIN.	TYP.	MAX.	Unit
Input leakage current, high	I_{LIH1}	$V_{IN} = V_{DD}$	XT1, XT2, XT3, XT4		0.7	10	μA
	I_{LIH2}		P00 to P06, P20 to P27, P30 to P37, P40 to P47, P50 to P57, P60 to P67, P70 to P77, P80 to P87, P90 to P95, $\overline{\text{RESET}}$		0.03	3	μA
Input leakage current, low	I_{LIL1}	V_{IN} = 0 V	XT1, XT2, XT3, XT4, P60 to P62 (Other than when reading)		–0.7	–10	μA
	I_{LIL2}		P00 to P06, P20 to P27, P30 to P37, P40 to P47, P50 to P57, P63 to P67, P70 to P77, P80 to P87, P90 to P95, $\overline{\text{RESET}}$		–0.03	–3	μA
Output leakage current, high	I_{LOH}	$V_{OUT} = V_{DD}$			0.03	3	μA
Output leakage current, low	I_{LOL}	V_{OUT} = 0 V			–0.03	–3	μA
Mask option pull-up resistor	R_1	V_{IN} = 0 V	$\overline{\text{RESET}}$	10	20	40	kΩ
	R_2		P60 to P62	100	200	400	kΩ
Software pull-up resistor	R_3	V_{IN} = 0 V	P00 to P06, P20 to P27, P30 to P37, P40 to P47, P50 to P57, P63 to P67, P70 to P77, P80 to P87, P90 to P95	100	200	400	kΩ

Remark Unless specified otherwise, the characteristics of alternate-function pins are the same as those of port pins.

LCD Controller/Driver Characteristics (T_A = –40 to +80°C, V_{DD} = 2.2 to 3.5 V)

Parameter	Symbol	Conditions		MIN.	TYP.	MAX.	Unit
LCD drive voltage	V_{LCD}	$V_{DD} = V_{LCD}$		2.2		3.5	V
Power boosting time for capacitor drive[Note 1]	t_{VCLD}	C = 0.47 μF[Note 2]		500			ms
LCD output voltage deviation (common)[Note 3, 4]	V_{ODC}	I_O = ±5 μA	Static 1/3 bias method	0		±0.2	V
LCD output voltage deviation (segment)[Note 3, 4]	V_{ODS}	I_O = ±1 μA	Static 1/3 bias method	0		±0.2	V

Notes 1. Means the time required for the capacitor to boost after bit 4 (LIP0) of LCD display mode register 0 (LCDM0) is set to 1 (power supply for LCD drive).

2. "C" is the capacitor connected to V_{LC1} and V_{LC2} between CAPH and CAPL.

3. The power deviation is the difference between the ideal segment and common output values (V_{LCD1}, V_{LCD2}) and the output voltage.

4. Voltage when there is no load.

AC Characteristics

(1) Basic operation (T_A = –40 to +80°C, V_{DD} = 2.2 to 3.5 V)

Parameter	Symbol	Conditions		MIN.	TYP.	MAX.	Unit
Cycle time (Minimum instruction execution time)	T_{CY}	Main system clock operation		1.33		8	μs
		Subsystem clock 1 operation		57.1	61	62.5	μs
TI00, TI01, input high-/low-level width	t_{TIH0}, t_{TIL0}			$2/f_{sam}$ + 0.5[Note]			μs
TI2 input frequency	f_{TI2}					500	kHz
TI2 input high-/low-level width	t_{TIH2}, t_{TIL2}			0.8			μs
Interrupt input high-/low-level width	t_{INTH}, t_{INTL}	INTP0 to INTP6	2.7 V ≤ V_{DD} ≤ 3.5 V	10			μs
			2.2 V ≤ V_{DD} < 2.7 V	20			μs
$\overline{\text{RESET}}$ input low-level width	t_{RSL}	2.7 V ≤ V_{DD} ≤ 3.5 V		10			μs
		2.2 V ≤ V_{DD} < 2.7 V		20			μs
$\overline{\text{WDTOUT}}$ output low-level width	t_{WDTL}			20			μs

Note At each capture trigger, sampling is performed using the count clock selected by bits 0 and 1 (PRM00, PRM01) of prescaler mode register 0 (PRM0) (f_{sam} = f_{XT1}, $f_{XT1}/2$, $f_{XT2}/2^4$). However, if the TI00 valid edge is selected as the count clock, the value becomes f_{sam} = $f_{XT1}/4$.

AC timing test points (excluding X1, XT1 inputs)

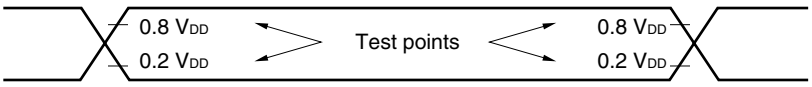

Clock timing

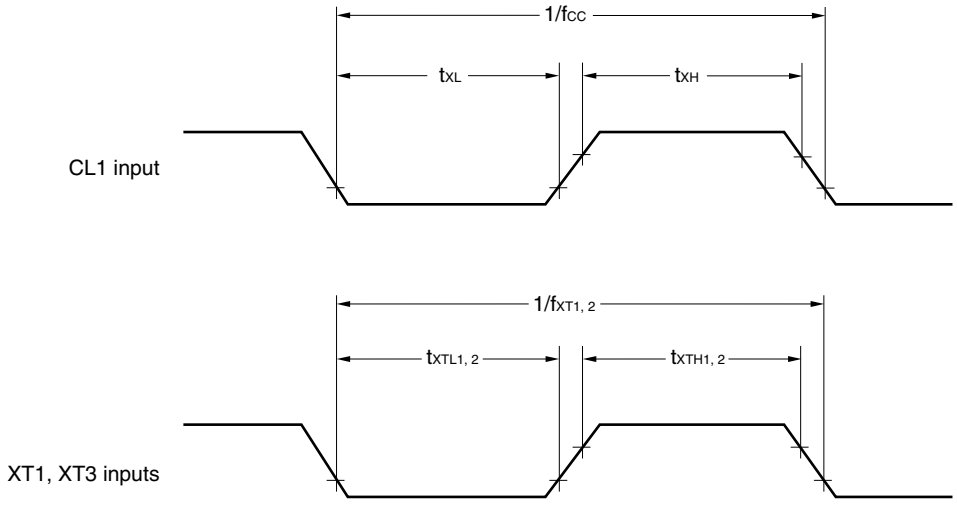

TI timing

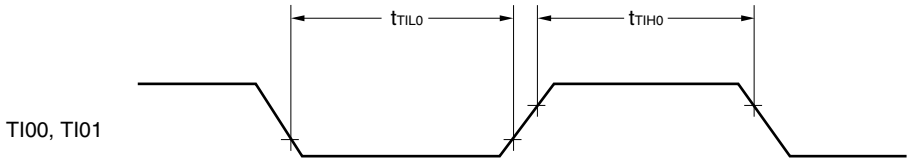

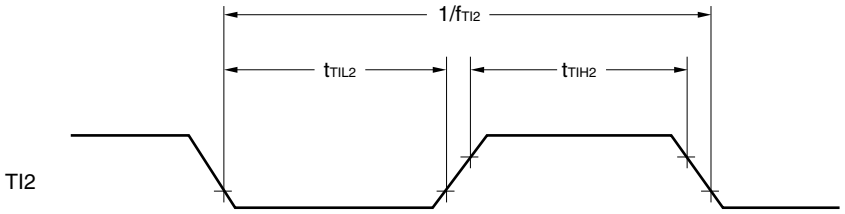

Interrupt request input timing

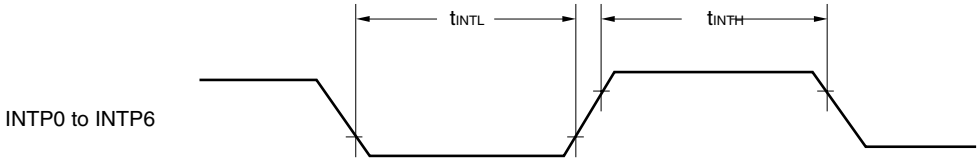

$\overline{\text{RESET}}$ input timing

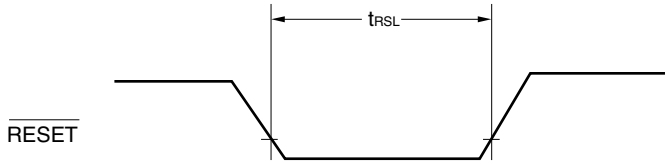

$\overline{\text{WDTOUT}}$ output timing

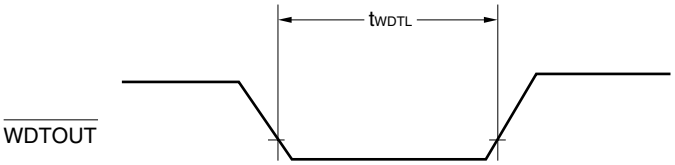

(2) Sampling output timer/detector

Parameter	Symbol	Conditions	MIN.	TYP.	MAX.	Unit
Sampling input setup time	t_{SMPS}		500			ns
Sampling input hold time	t_{SMPH}		500			ns

Sampling output timer/detector input timing

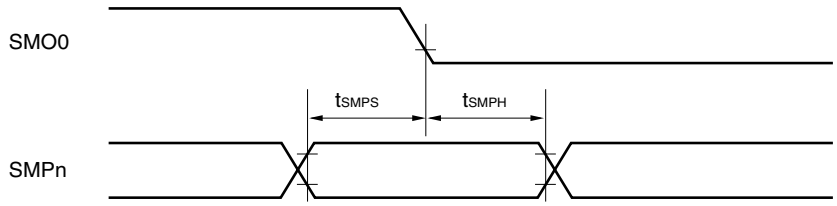

n = 1 to 4

(3) MR sampling function

Parameter	Symbol	Conditions	MIN.	TYP.	MAX.	Unit
Phase detection input setup time	t_{MRIS}		500			ns
Phase detection input hold time	t_{MRIH}		500			ns

MR sampling function input timing

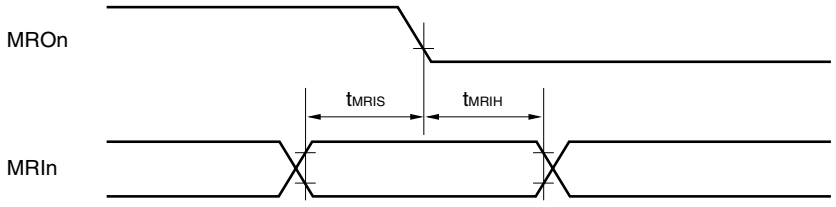

n = 0, 1

(4) Serial interface

(a) UART mode (dedicated baud rate generator output)

Parameter	Symbol	Conditions	MIN.	TYP.	MAX.	Unit
Transfer rate		Select subsystem clock 1 for the input clock of the baud rate generator (ASIF2 TPS21 = 0, TPS20 = 0)			1200	bps
		Select subsystem clock 2 for the input clock of the baud rate generator (ASIF2 TPS21 = 1, TPS20 = 0)			4800	

Remark ASIF2: Asynchronous serial interface function register 2

(b) 3-wire serial I/O mode (internal clock output)

Parameter	Symbol	Conditions	MIN.	TYP.	MAX.	Unit
$\overline{SCK3}$ cycle time	t_{KCY1}		30.5			μs
$\overline{SCK3}$ high-/low-level width	t_{KH1}, t_{KL1}		$t_{KCY1}/2 - 50$			ns
SI3 setup time (to $\overline{SCK3}\uparrow$)	t_{SIK1}		300			ns
SI3 hold time (from $\overline{SCK3}\uparrow$)	t_{KSI1}		400			ns
Delay time from $\overline{SCK3}\downarrow$ to SO3 output	t_{KSO1}	C = 100 pF[Note]			300	ns

Note C is the load capacitance of the $\overline{SCK3}$ and SO3 output lines.

(c) 3-wire serial I/O mode (external clock input)

Parameter	Symbol	Conditions	MIN.	TYP.	MAX.	Unit
$\overline{SCK3}$ cycle time	t_{KCY2}		3.2			μs
$\overline{SCK3}$ high-/low-level width	t_{KH2}, t_{KL2}		1600			ns
SI3 setup time (to $\overline{SCK3}\uparrow$)	t_{SIK2}		100			ns
SI3 hold time (from $\overline{SCK3}\uparrow$)	t_{KSI2}		400			ns
Delay time from $\overline{SCK3}\downarrow$ to SO3 output	t_{KSO2}	C = 100 pF[Note]			300	ns

Note C is the load capacitance of the SO3 output line.

Serial Transfer Timing

3-wire serial I/O mode:

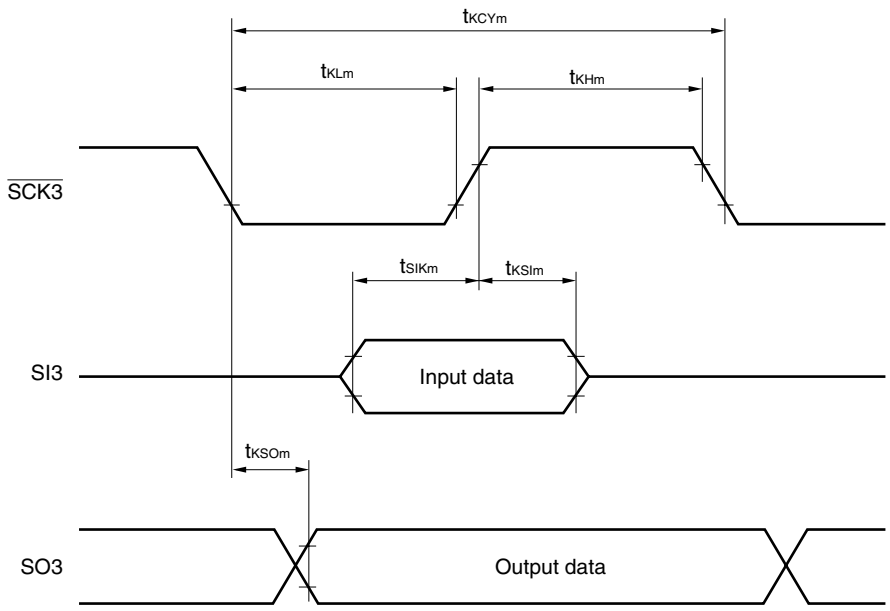

Remark m = 1, 2

100-PIN PLASTIC LQFP (FINE PITCH) (14x14)

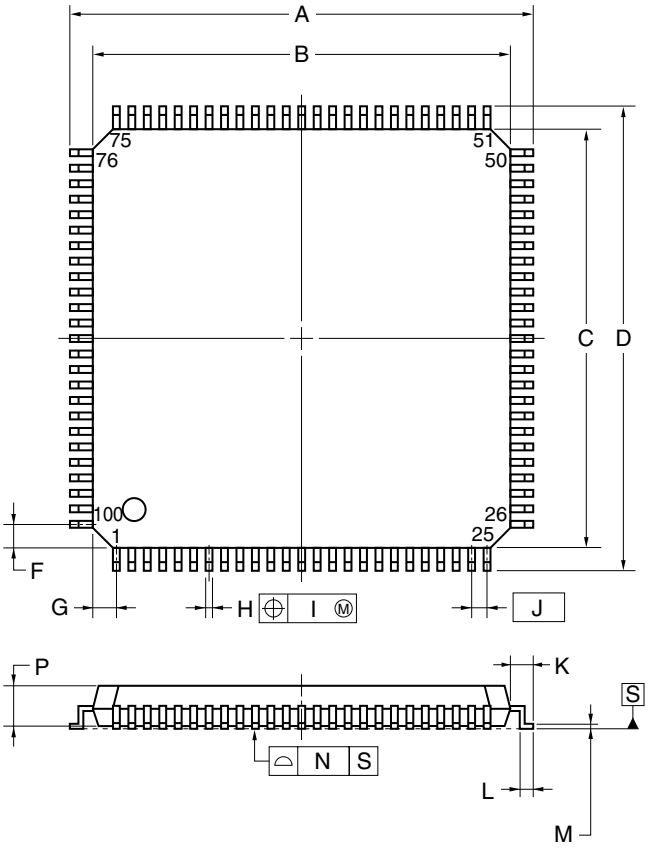

detail of lead end

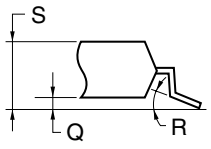

NOTE

Each lead centerline is located within 0.08 mm of its true position (T.P.) at maximum material condition.

ITEM	MILLIMETERS
A	16.00±0.20
B	14.00±0.20
C	14.00±0.20
D	16.00±0.20
F	1.00
G	1.00
H	$0.22^{+0.05}_{-0.04}$
I	0.08
J	0.50 (T.P.)
K	1.00±0.20
L	0.50±0.20
M	$0.17^{+0.03}_{-0.07}$
N	0.08
P	1.40±0.05
Q	0.10±0.05
R	$3^{\circ}{}^{+7^{\circ}}_{-3^{\circ}}$
S	1.60 MAX.

S100GC-50-8EU, 8EA-2

Remark The dimensions and materials of the ES version are the same as those of the mass-produced version.

★ CHAPTER 25 RECOMMENDED SOLDERING CONDITIONS

The μPD780957(A) and 780958(A) should be soldered and mounted under the following recommended conditions.

For soldering methods and conditions other than those recommended below, contact an NEC Electronics sales representative.

For technical information, see the following website.

Semiconductor Device Mount Manual (http://www.necel.com/pkg/en/mount/index.html)

Table 25-1. Surface Mounting Type Soldering Conditions

μPD780957GC(A)-×××-8EU: 100-pin plastic LQFP (fine pitch) (14 × 14)
μPD780958GC(A)-×××-8EU: 100-pin plastic LQFP (fine pitch) (14 × 14)

Soldering Method	Soldering Conditions	Recommended Condition Symbol
Infrared reflow	Package peak temperature: 235°C, Time: 30 sec. max. (at 210°C or higher), Count: two times or less	IR35-00-2
VPS	Package peak temperature: 215°C, Time: 40 sec. max. (at 200°C or higher), Count: two times or less	VP15-00-2
Partial heating	Pin temperature: 300°C max., Time: 3 sec. max. (per pin row)	—

Caution Do not use different soldering methods together (except for partial heating).

APPENDIX A DEVELOPMENT TOOLS

The following development tools are available for the development of systems that employ the μPD780958 Subseries.

- Support of the PC98-NX Series
  Unless otherwise specified, the μPD780958 Subseries products supported by IBM PC/AT™ and compatibles can be used for the PC98-NX Series. When using the PC98-NX Series, see the descriptions of the IBM PC/AT and compatibles.

- Windows
  Unless otherwise specified, "Windows" indicates the following OSs.
  - Windows 3.1
  - Windows 95
  - Windows 98 ★
  - Windows 2000 ★
  - Windows NT™ Ver. 4.0

★ **Figure A-1. Development Tool Configuration**

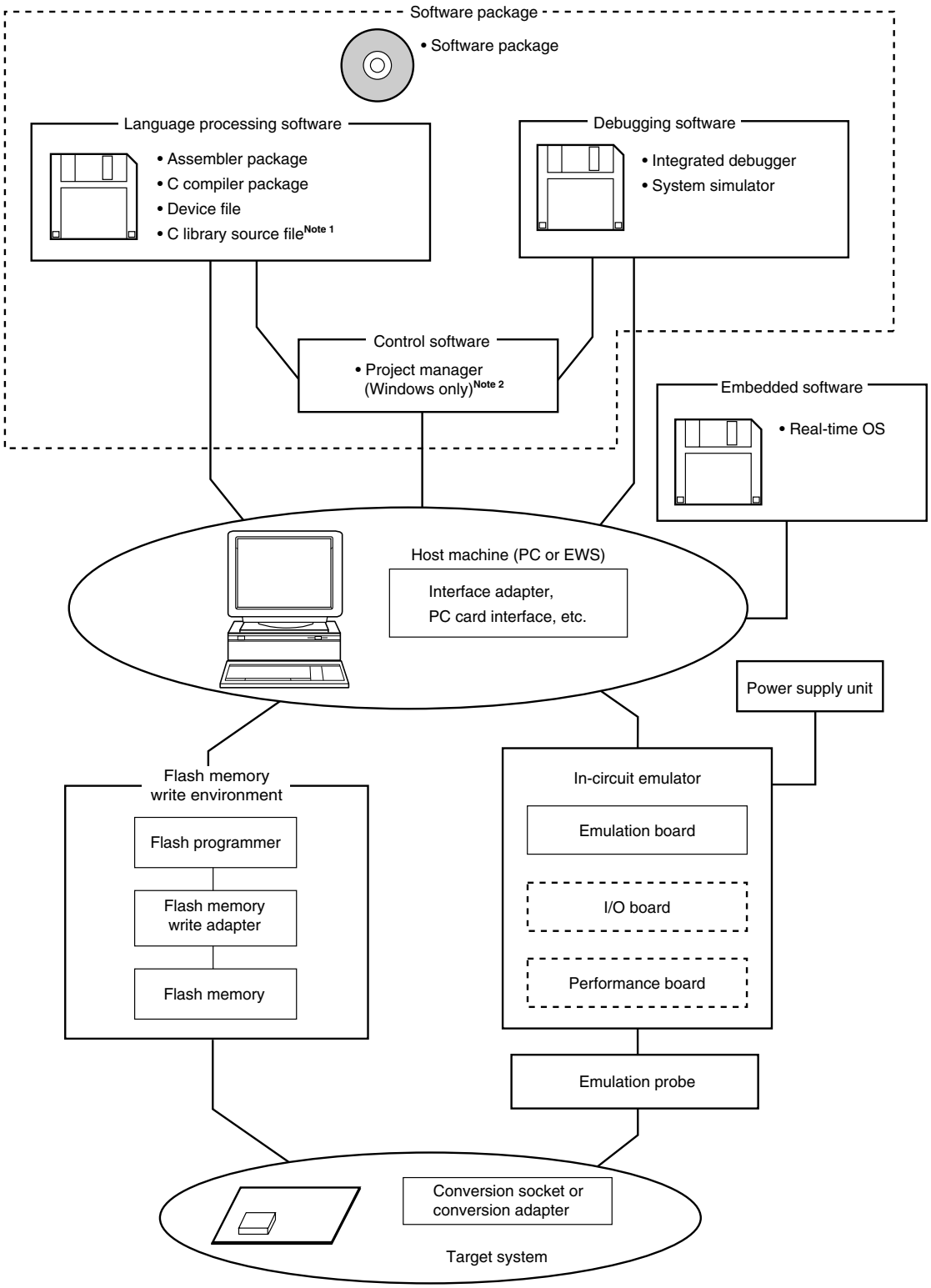

Notes 1. The C library source file is not included in the software package.

2. The project manager is included in the assembler package.
The project manager is only used for Windows.

★ A.1 Software Package

SP78K0 Software Package	This package contains various software tools for 78K/0 Series development. The following tools are included. RA78K0, CC78K0, ID78K0-NS, SM78K0, and various device files
	Part Number: μS××××SP78K0

Remark ××××in the part number differs depending on the OS used.

μS××××SP78K0

××××	Host Machine	OS	Supply Medium
AB17	PC-9800 series, IBM PC/AT compatibles	Windows (Japanese version)	CD-ROM
BB17		Windows (English version)	

A.2 Language Processing Software

RA78K0 Assembler Package	This assembler converts programs written in mnemonics into object code executable with a microcontroller. Further, this assembler is provided with functions capable of automatically creating symbol tables and branch instruction optimization. This assembler should be used in combination with the DF780958 device file (sold separately). **<Caution when using RA78K0 in PC environment>** This assembler package is a DOS-based application. However, it can also be used in Windows by using the project manager (included in the assembler package) in Windows.
	Part number: μS××××RA78K0
CC78K0 C Compiler Package	This compiler converts programs written in C language into object codes executable with a microcontroller. This compiler should be used with an assembler package and device file (sold separately). **<Caution when using CC78K0 in PC environment>** This C compiler is a DOS-based application. However, it can also be used in Windows by using the project manager (included in the assembler package) in Windows.
	Part number: μS××××CC78K0
DF780958[Note 1] Device File	This file contains information peculiar to the device. The device file should be used in combination with one of the separately-sold tools (RA78K0, CC78K0, SM78K0, ID78K0-NS, ID78K0, or RX78K0). The corresponding OS and host machine differ depending on the tool used.
	Part number: μS××××DF780958
CC78K0-L[Note 2] C Library Source File	This is a source file of functions configuring the object library included in the C compiler package. This file is required to match the object library included in the C compiler package to the customer's specifications. The operating environment does not depend on the OS because this is a source file.
	Part number: μS××××CC78K0-L

Notes 1. The DF780958 can be used in common with the RA78K0, CC78K0, SM78K0, ID78K0-NS, ID78K0, and RX78K0.

★ **2.** CC78K0-L is not included in the software package (SP78K0).

★ **Remark** ××××in the part number differs depending on the host machine and OS used.

μS××××RA78K0
μS××××CC78K0

××××	Host Machine	OS	Supply Medium
AB13	PC-9800 series, IBM PC/AT compatibles	Windows (Japanese version)	3.5-inch 2HD FD
BB13		Windows (English version)	
AB17		Windows (Japanese version)	CD-ROM
BB17		Windows (English version)	
3P17	HP9000 series 700™	HP-UX™ (Rel. 10.10)	
3K17	SPARCstation™	SunOS™ (Rel. 4.1.4), Solaris™ (Rel. 2.5.1)	

μS××××DF780958
μS××××CC78K0-L

××××	Host Machine	OS	Supply Medium
AB13	PC-9800 series, IBM PC/AT compatibles	Windows (Japanese version)	3.5-inch 2HD FD
BB13		Windows (English version)	
3P16	HP9000 series 700	HP-UX (Rel. 10.10)	DAT
3K13	SPARCstation	SunOS (Rel. 4.1.4), Solaris (Rel. 2.5.1)	3.5-inch 2HD FD
3K15			1/4-inch CGMT

★ A.3 Control Software

Project manager	This is control software designed to enable efficient user program development in the Windows environment. All operations used in development of a user program, such as starting the editor, building, and starting the debugger, can be performed from the project manager. **<Caution>** The project manager is included in the assembler package (RA78K0). It can only be used in Windows.

★ A.4 Flash Memory Writing Tools

Flashpro III (Part number: FL-PR3, PG-FP3) Flashpro IV (Part number: FL-PR4, PG-FP4) Flash programmer	Flash programmer dedicated to microcontrollers with on-chip flash memory.
FA-100GC-8EU Flash memory writing adapter	Flash memory writing adapter used connected to the Flashpro III/Flashpro IV. • FA-100GC-8EU: 100-pin plastic LQFP (GC-8EU type)

Remark FL-PR3, FL-PR4, and FA-100GC-8EU are products of Naito Densei Machida Mfg. Co., Ltd.
Contact: +81-45-475-4191 Naito Densei Machida Mfg. Co., Ltd.

A.5 Debugging Tools (Hardware)

★ A.5.1 When using in-circuit emulator IE-78K0-NS or IE-78K0-NS-A

IE-78K0-NS In-Circuit Emulator		This in-circuit emulator serves to debug hardware and software when developing application systems using a 78K/0 Series product. It corresponds to the ID78K0-NS integrated debugger. This emulator should be used in combination with a power supply unit, emulation probe, and interface adapter connecting this emulator to the host machine.
IE-78K0-NS-PA Performance Board		This board is used for extending the IE-78K0-NS functions, and is used connected to the IE-78K0-NS. With the addition of this board, the addition of a coverage function, enhancement of tracer and timer functions, and other such debugging function enhancement are possible.
IE-78K0-NS-A In-Circuit Emulator		In-circuit emulator that combines IE-78K0-NS and IE-78KS-PA
IE-70000-MC-PS-B Power Supply Unit		This adapter is used to supply power from a power outlet of 100 VAC to 240 VAC.
IE-70000-98-IF-C Interface Adapter		This adapter is required when using a PC-9800 Series computer (except notebook type) as the host machine (C bus supported).
IE-70000-CD-IF-A PC Card Interface		This PC card and interface cable are required when using a notebook PC as the host machine (PCMCIA socket supported).
IE-70000-PC-IF-C Interface Adapter		This adapter is required when using an IBM PC/AT or compatible computer as the host machine (ISA bus supported).
IE-70000-PCI-IF-A Interface Adapter		This adapter is required when using a computer that includes a PCI bus as the host machine.
IE-780958-NS-EM4 Emulation Board		This board emulates the operations of the peripheral hardware peculiar to a device. It should be used in combination with an in-circuit emulator.
	IE-78K0-NS-P02 I/O Board	This I/O board is needed to use the IE-780958-NS-EM4.
NP-100GC NP-H100GC-TQ Emulation Probe		This probe is used to connect the in-circuit emulator to the target system, and is designed for a 100-pin plastic LQFP (GC-8EU type).
	TGK-100SDW Conversion Adapter (see Figure A-2)	This conversion adapter connects the NP-100GC or NP-H100GC-TQ to the target system board designed to mount a 100-pin plastic LQFP (GC-8EU type).

Remarks 1. The NP-100GC and NP-H100GC-TQ are products made by Naito Densei Machida Mfg. Co., Ltd.
Contact: +81-45-475-4191 Naito Densei Machida Mfg. Co., Ltd.

2. The TGC-100SDW is a product made by TOKYO ELETECH CORPORATION.
For further information, contact: Daimaru Kougyou, Ltd.
Tokyo Electronics Department (Tel +81-3-3820-7112)
Osaka Electronics Department (Tel +81-6-6244-6672)

3. The TGC-100SDW is sold in one units.

★ A.5.2 When using in-circuit emulator IE-78001-R-A

IE-78001-R-A In-Circuit Emulator		The in-circuit emulator serves to debug hardware and software when developing application systems using a 78K/0 Series product. It corresponds to the integrated debugger (ID78K0). This emulator should be used in combination with an emulation probe and interface adapter, which is required to connect this emulator to the host machine.
IE-70000-98-IF-C Interface Adapter		This adapter is required when using a PC-9800 series computer (except notebook type) as the IE-78001-R-A host machine (C bus supported).
IE-70000-PC-IF-C Interface Adapter		This adapter is required when using an IBM PC/AT or compatible computer as the IE-78001-R-A host machine (ISA bus supported).
IE-70000-PCI-IF-A Interface Adapter		This adapter is required when using a computer with a PCI bus as the IE-78001-R-A host machine.
IE-780958-NS-EM4 Emulation Board		This board emulates the operations of the peripheral hardware peculiar to a device. It should be used in combination with an in-circuit emulator and emulation probe conversion board.
	IE-78K0-NS-P02 I/O Board	This I/O board is needed to use the IE-780958-NS-EM4.
	IE-78K0-R-EX1 Emulation Probe Conversion Board	This board is required when using the IE-780958-NS-EM4+IE-78K0-NS-P02 on the IE-78001-R-A.
EP-78064GC-R Emulation Probe		This probe is used to connect the in-circuit emulator to a target system and is designed for use with a 100-pin plastic LQFP (GC-8EU type).
	TGC-100SDW Conversion Adapter (See **Figure A-2**)	This conversion adapter connects the EP-78064GC-R to a target system board designed for a 100-pin plastic LQFP (GC-8EU type).

Remarks 1. TGC-100SDW is a product of TOKYO ELETECH CORPORATION.
Inquiry: Daimaru Kogyo, Ltd. Phone: Tokyo +81-3-3820-7112 Electronics Dept.
Osaka +81-6-6244-6672 Electronics 2nd Dept.

2. TGC-100SDW is sold in one units.

A.6 Debugging Tools (Software)

SM78K0 System Simulator	This is a system simulator for the 78K/0 Series. The SM78K0 is Windows-based software. It is used to perform debugging at the C source level or assembler level while simulating the operation of the target system on a host machine. Use of the SM78K0 allows the execution of application logical testing and performance testing on an independent basis from hardware development, thereby providing higher development efficiency and software quality. The SM78K0 should be used in combination with a device file (DF780958) (sold separately).
	Part Number: μS××××SM78K0
ID78K0-NS Integrated Debugger (Supporting In-Circuit Emulators ★ IE-78K0-NS and IE-78K0-NS-A)	This debugger supports the in-circuit emulators for the 78K/0 Series. The ID78K0-NS and ID78K0 are Windows-based software. It has improved C-compatible debugging functions and can display the results of tracing with the source program using an integrating window function that the source program, disassemble display, and memory display with the trace result. It should be used in combination with a device file (sold separately).
★ ID78K0 Integrated Debugger (Supporting In-Circuit Emulator IE-78001-R-A)	
	Part Number: μS××××ID78K0-NS, μS××××ID78K0

★ **Remark** ×××× in the part number differs depending on the host machine and OS used.

μS××××SM78K0
μS××××ID78K0-NS
μS××××ID78K0

××××	Host Machine	OS	Supply Medium
AB13	PC-9800 series, IBM PC/AT compatibles	Windows (Japanese version)	3.5-inch 2HD FD
BB13		Windows (English version)	
AB17		Windows (Japanese version)	CD-ROM
BB17		Windows (English version)	

★ A.7 Embedded Software

RX78K0 Real-Time OS	RX78K0 is a real-time OS conforming to the μITRON specification. A tool (configurator) for generating the nucleus of the RX78K0 and multiple information tables is supplied. Use in combination with an assembler package (RA78K0) and device file (DF780958) (both sold separately). **<Caution when using RX78K/0 in PC environment>** The real-time OS is a DOS-based application. It should be used with the DOS prompt in Windows.
	Part number: μS××××RX78013-ΔΔΔΔ

Caution When purchasing the RX78K0, fill in the purchase application form in advance and sign the User Agreement.

Remark ×××× and ΔΔΔΔ in the part number differ depending on the host machine and OS used.

μS××××RX78013-ΔΔΔΔ

ΔΔΔΔ	Product Outline	Maximum Number for Use in Mass Production
001	Evaluation object	Do not use for mass-produced product.
100K	Mass-production object	0.1 million units
001M		1 million units
010M		10 million units
S01	Source program	Source program for mass-produced program

××××	Host Machine	OS	Supply Medium
AA13	PC-9800 Series	Windows (Japanese version)	3.5-inch 2HD FD
AB13	IBM PC/AT and compatibles	Windows (Japanese version)	
BB13		Windows (English version)	

★ A.8 System Upgrade from Former In-Circuit Emulator for 78K/0 Series to IE-78001-R-A

If you already have a former in-circuit emulator for 78K/0 Series microcontrollers (IE-78000-R or IE-78000-R-A), that in-circuit emulator can operate as an equivalent to the IE-78001-R-A by replacing its internal break board with the IE-78001-R-BK.

Table A-1. System Upgrade Method from Former In-Circuit Emulator for 78K/0 Series to IE-78001-R-A

In-Circuit Emulator Owned	In-Circuit Emulator Casing Upgrade[Note]	Board To Be Purchased
IE-78000-R	Required	IE-78001-R-BK
IE-78000-R-A	Not required	

Note For upgrading of the casing, send your in-circuit emulator to NEC Electronics.

A.9 Conversion Adapter (TGC-100SDW) Package Drawing

Figure A-2. TGC-100SDW Package Drawing (For Reference Only) (Unit: mm)

TGC-100SDW (TQPACK100SD + TQSOCKET100SDW) Package dimension (unit: mm)

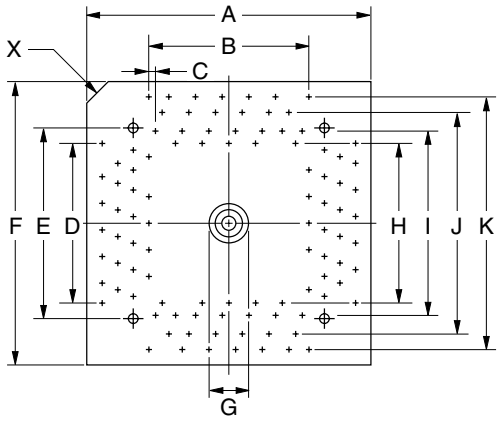

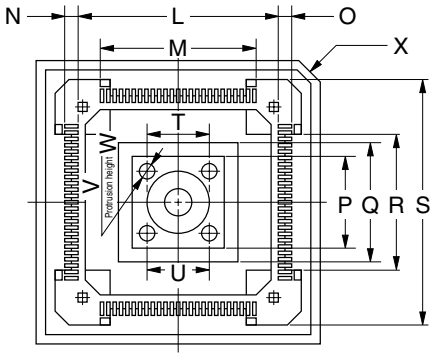

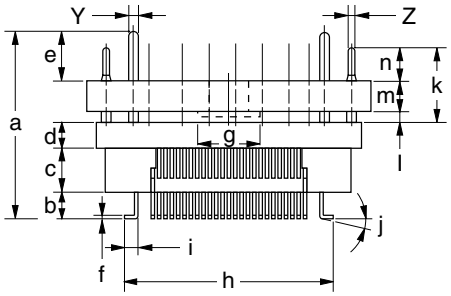

ITEM	MILLIMETERS	INCHES
A	21.55	0.848
B	0.5x24=12	0.020x0.945=0.472
C	0.5	0.020
D	0.5x24=12	0.020x0.945=0.472
E	15.0	0.591
F	21.55	0.848
G	ϕ3.55	ϕ0.140
H	10.9	0.429
I	13.3	0.524
J	15.7	0.618
K	18.1	0.713
L	13.75	0.541
M	0.5x24=12.0	0.020x0.945=0.472
N	1.125±0.3	0.044±0.012
O	1.125±0.2	0.044±0.008
P	7.5	0.295
Q	10.0	0.394
R	11.3	0.445
S	18.1	0.713
T	ϕ5.0	ϕ0.197
U	5.0	0.197
V	4-ϕ1.3	4-ϕ0.051
W	1.8	0.071
X	C 2.0	C 0.079
Y	ϕ0.9	ϕ0.035
Z	ϕ0.3	ϕ0.012

ITEM	MILLIMETERS	INCHES
a	14.45	0.569
b	1.85±0.25	0.073±0.010
c	3.5	0.138
d	2.0	0.079
e	3.9	0.154
f	0.25	0.010
g	ϕ4.5	ϕ0.177
h	16.0	0.630
i	1.125±0.3	0.044±0.012
j	0~5°	0.000~0.197°
k	5.9	0.232
l	0.8	0.031
m	2.4	0.094
n	2.7	0.106

TGC-100SDW-G1E

note: Product by TOKYO ELETECH CORPORATION.

★ APPENDIX B NOTES ON TARGET SYSTEM DESIGN

A diagram outlining the connection conditions for the emulation probe and adapter is shown below. Perform system design based on this configuration, taking into consideration the shape of the parts to be mounted on the target system as well as other relevant factors.

Table B-1. Distance Between In-Circuit Emulator and Conversion Adapter

Emulation Probe	Conversion Adapter	Distance Between In-Circuit Emulator and Conversion Adapter
NP-100GC	TGC-100SDW	170 mm
NP-H100GC-TQ		370 mm

Remarks 1. Use NP-100GC and NP-H100GC-TQ when using in-circuit emulators IE-78K0-NS and IE-78K0-NS-A.

2. The NP-100GC and NP-H100GC-TQ are products made by Naito Densei Machida Mfg. Co., Ltd. The TGC-100SDW is a product made by TOKYO ELETECH CORPORATION.

Figure B-1. Distance Between In-Circuit Emulator and Conversion Adapter (1)

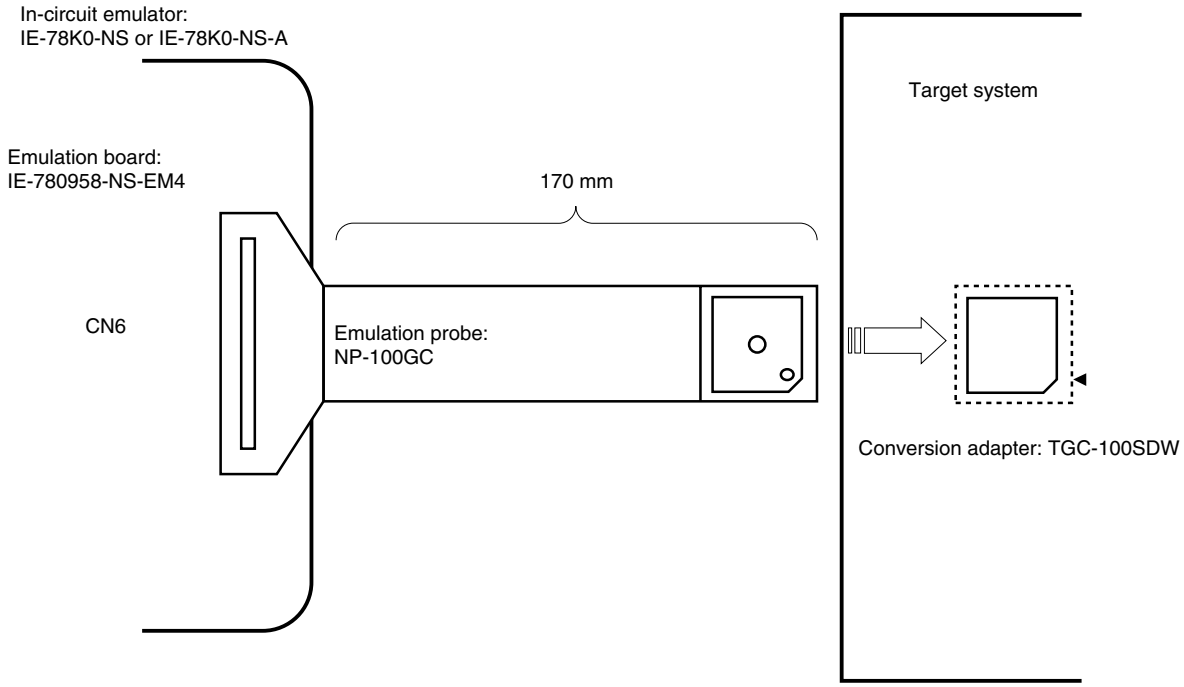

Figure B-2. Distance Between In-Circuit Emulator and Conversion Adapter (2)

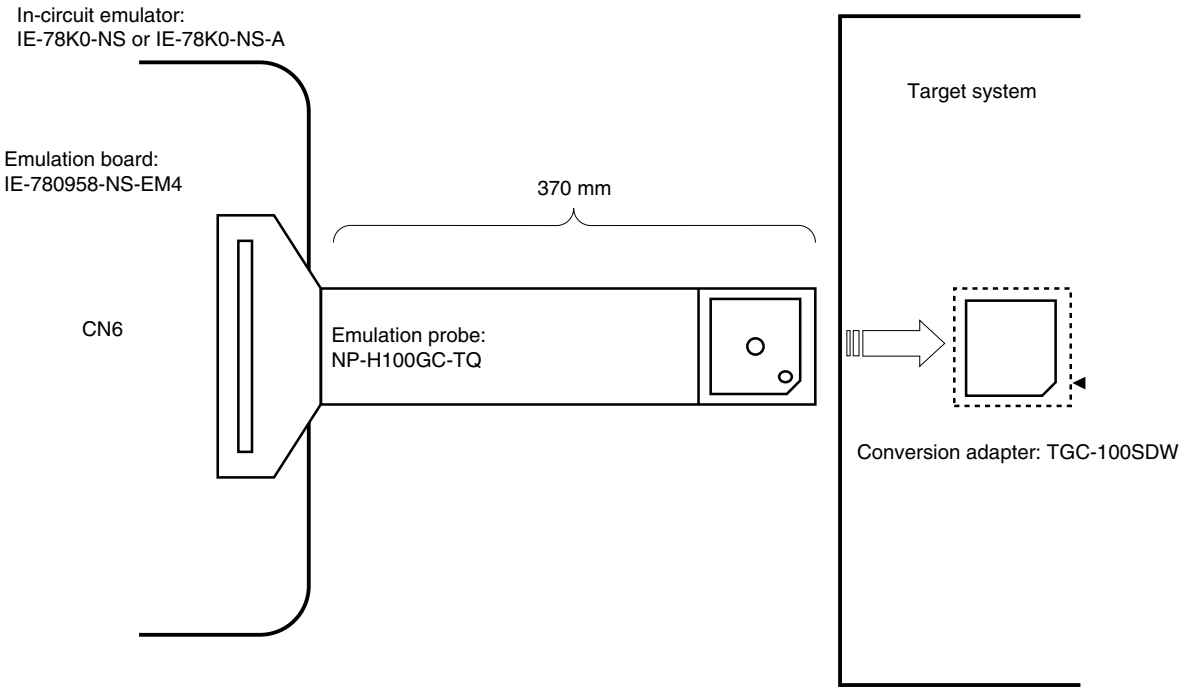

Figure B-3. Connection Condition of Target System

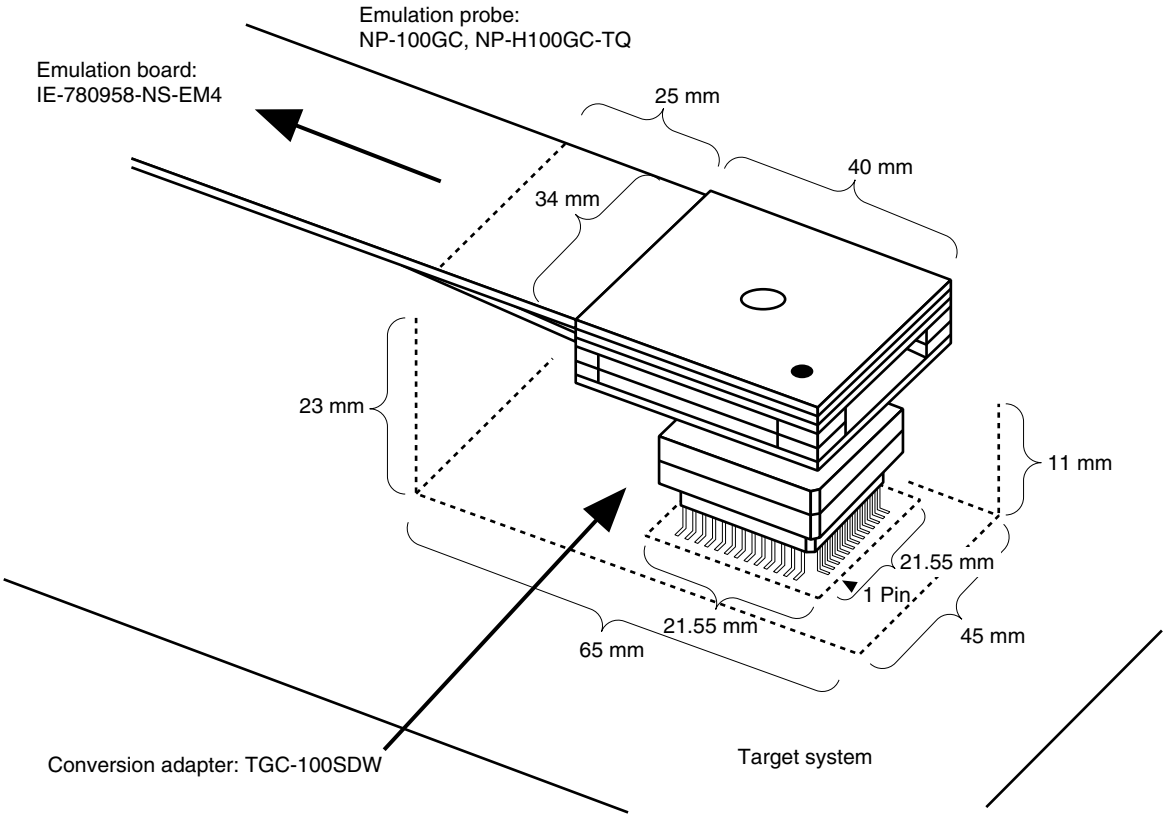

APPENDIX C REGISTER INDEX

C.1 Register Index (Register Name)

[Numeric]

16-bit timer capture/compare register 00 (CR00) 126
16-bit timer capture/compare register 01 (CR01) 128
16-bit timer compare register 2 (CR2) 154
16-bit timer mode control register 0 (TMC0) 129
16-bit timer output control register 0 (TOC0) 132
16-bit timer counter 0 (TM0) 126
16-bit timer counter 2 (TM2) 154
8-bit compare register 80 (CR80) 165
8-bit compare register 81 (CR81) 165
8-bit compare register 82 (CR82) 165
8-bit compare register 83 (CR83) 165
8-bit MR counter 0 (TMMR0) 191
8-bit timer control register 80 (TMC80) 166
8-bit timer control register 81 (TMC81) 166
8-bit timer control register 82 (TMC82) 166
8-bit timer control register 83 (TMC83) 166
8-bit timer counter 80 (TM80) 165
8-bit timer counter 81 (TM81) 165
8-bit timer counter 82 (TM82) 165
8-bit timer counter 83 (TM83) 165

[A]

Asynchronous serial interface function register 2 (ASIF2) 209
Asynchronous serial interface mode register 2 (ASIM2) 206
Asynchronous serial interface status register 2 (ASIS2) 208

[C]

Capture/compare control register 0 (CRC0) 131
Clock output select register (CKS) 200
Compare register 2 for baud rate generation (BRCR2) 210

[E]

External interrupt falling edge enable register (EGN) 250
External interrupt rising edge enable register (EGP) 250

[I]

Internal expansion RAM size switching register (IXS) 49, 271
Interrupt mask flag register 0H (MK0H) 248
Interrupt mask flag register 0L (MK0L) 248
Interrupt mask flag register 1H (MK1H) 248
Interrupt mask flag register 1L (MK1L) 248
Interrupt request flag register 0H (IF0H) 247
Interrupt request flag register 0L (IF0L) 247

Interrupt request flag register 1H (IF1H) 247
Interrupt request flag register 1L (IF1L) 247

[L]

LCD clock control register 0 (LCDC0) 229
LCD display mode register 0 (LCDM0) 228

[M]

Memory size switching register (IMS) 49, 270
MR sampling control register 0 (MRM0) 194
MRTD compare register 0 (CRM0) 191
MRTD control register 0 (TCM0) 192
MRTD output control register 0 (TMM0) 193

[P]

Port 0 (P0) 79
Port 2 (P2) 82
Port 3 (P3) 83
Port 4 (P4) 86
Port 5 (P5) 87
Port 6 (P6) 89
Port 7 (P7) 91
Port 8 (P8) 92
Port 9 (P9) 93
Port function control register 7 (PF7) 98, 229
Port function control register 8 (PF8) 98, 229
Port function control register 9 (PF9) 98, 229
Port mode register 0 (PM0) 94
Port mode register 2 (PM2) 94
Port mode register 3 (PM3) 94, 134, 201
Port mode register 4 (PM4) 94
Port mode register 5 (PM5) 94
Port mode register 6 (PM6) 94
Port mode register 7 (PM7) 94
Port mode register 8 (PM8) 94
Port mode register 9 (PM9) 94
Prescaler mode register 0 (PRM0) 133
Priority specification flag register 0H (PR0H) 249
Priority specification flag register 0L (PR0L) 249
Priority specification flag register 1H (PR1H) 249
Priority specification flag register 1L (PR1L) 249
Processor clock control register (PCC) 104
Program status word (PSW) 55, 251
Pull-up resistor option register 0 (PU0) 96
Pull-up resistor option register 2 (PU2) 96
Pull-up resistor option register 3 (PU3) 96
Pull-up resistor option register 4 (PU4) 96
Pull-up resistor option register 5 (PU5) 96

Pull-up resistor option register 6 (PU6) 96
Pull-up resistor option register 7 (PU7) 96
Pull-up resistor option register 8 (PU8) 96
Pull-up resistor option register 9 (PU9) 96

[R]

Receive buffer register 2 (RXB2) 204
RTO data register 10 (RTO10) 119
RTO data register 11 (RTO11) 119
RTO operation mode register 1 (RTM1) 120
RTO reload interrupt compare register 1 (RTC1) 120

[S]

Serial I/O shift register 3 (SIO3) 219
Serial operation mode register 3 (CSIM3) 220
SMTD clock select register A0 (TCSA0) 184
SMTD clock select register B0 (TCSB0) 184
SMTD compare register A0 (CRSA0) 183
SMTD compare register B0 (CRSB0) 183
SMTD control register 0 (TSM0) 185
SMTD sampling level setting register 0 (SMS0) 187
SMTD sampling pin status register 0 (SMD0) 187
SUB2 clock control register (CKC) 105

[T]

Timer input control register 2 (TICT2) 156
Timer mode control register 2 (TMC2) 155
Transmit shift register 2 (TXS2) 204

[U]

UART pin switching register (UTCH0) 210

[W]

Watchdog timer clock select register (WDCS) 176
Watchdog timer mode register (WDTM) 177

C.2 Register Index (Register Symbol)

[A]

ASIF2: Asynchronous serial interface function register 2 209
ASIM2: Asynchronous serial interface mode register 2 206
ASIS2: Asynchronous serial interface status register 2 208

[B]

BRCR2: Compare register 2 for baud rate generation 210

[C]

CKC: SUB2 clock control register 105
CKS: Clock output select register 200
CR00: 16-bit timer capture/compare register 00 126
CR01: 16-bit timer capture/compare register 01 128
CR2: 16-bit timer compare register 2 154
CR80: 8-bit compare register 80 165
CR81: 8-bit compare register 81 165
CR82: 8-bit compare register 82 165
CR83: 8-bit compare register 83 165
CRC0: Capture/compare control register 0 131
CRM0: MRTD compare register 0 191
CRSA0: SMTD compare register A0 183
CRSB0: SMTD compare register B0 183
CSIM3: Serial operation mode register 3 220

[E]

EGN: External interrupt falling edge enable register 250
EGP: External interrupt rising edge enable register 250

[I]

IF0H: Interrupt request flag register 0H 247
IF0L: Interrupt request flag register 0L 247
IF1H: Interrupt request flag register 1H 247
IF1L: Interrupt request flag register 1L 247
IMS: Memory size switching register 49, 270
IXS: Internal expansion RAM size switching register 49, 271

[L]

LCDC0: LCD clock control register 0 229
LCDM0: LCD display mode register 0 228

[M]

MK0H: Interrupt mask flag register 0H 248
MK0L: Interrupt mask flag register 0L 248
MK1H: Interrupt mask flag register 1H 248
MK1L: Interrupt mask flag register 1L 248
MRM0: MR sampling control register 0 194

[P]

P0: Port 0 79
P2: Port 2 82
P3: Port 3 83
P4: Port 4 86
P5: Port 5 87
P6: Port 6 89
P7: Port 7 91
P8: Port 8 92
P9: Port 9 93
PCC: Processor clock control register 104
PF7: Port function control register 7 ..... 98, 229
PF8: Port function control register 8 ..... 98, 229
PF9: Port function control register 9 ..... 98, 229
PM0: Port mode register 0 94
PM2: Port mode register 2 94
PM3: Port mode register 3 ..... 94, 134, 201
PM4: Port mode register 4 94
PM5: Port mode register 5 94
PM6: Port mode register 6 94
PM7: Port mode register 7 94
PM8: Port mode register 8 94
PM9: Port mode register 9 94
PR0H: Priority specification flag register 0H 249
PR0L: Priority specification flag register 0L 249
PR1H: Priority specification flag register 1H 249
PR1L: Priority specification flag register 1L 249
PRM0: Prescaler mode register 0 133
PSW: Program status word 55, 251
PU0: Pull-up resistor option register 0 96
PU2: Pull-up resistor option register 2 96
PU3: Pull-up resistor option register 3 96
PU4: Pull-up resistor option register 4 96
PU5: Pull-up resistor option register 5 96
PU6: Pull-up resistor option register 6 96
PU7: Pull-up resistor option register 7 96
PU8: Pull-up resistor option register 8 96
PU9: Pull-up resistor option register 9 96

[R]

RTC1: RTO reload interrupt compare register 1 120
RTM1: RTO operation mode register 1 120
RTO10: RTO data register 10 119
RTO11: RTO data register 11 119
RXB2: Receive buffer register 2 204

[S]

SIO3: Serial I/O shift register 3 219
SMD0: SMTD sampling pin status register 0 187
SMS0: SMTD sampling level setting register 0 187

[T]

TCM0: MRTD control register 0 192
TCSA0: SMTD clock select register A0 184
TCSB0: SMTD clock select register B0 184
TICT2: Timer input control register 2 156
TM0: 16-bit timer counter 0 126
TM2: 16-bit timer counter 2 154
TM80: 8-bit timer counter 80 165
TM81: 8-bit timer counter 81 165
TM82: 8-bit timer counter 82 165
TM83: 8-bit timer counter 83 165
TMC0: 16-bit timer mode control register 0 129
TMC2: Timer mode control register 2 155
TMC80: 8-bit timer control register 80 166
TMC81: 8-bit timer control register 81 166
TMC82: 8-bit timer control register 82 166
TMC83: 8-bit timer control register 83 166
TMM0: MRTD output control register 0 193
TMMR0: 8-bit MR counter 0 191
TOC0: 16-bit timer output control register 0 132
TSM0: SMTD control register 0 185
TXS2: Transmit shift register 2 204

[U]

UTCH0: UART pin switching register 210

[W]

WDCS: Watchdog timer clock select register 176
WDTM: Watchdog timer mode register 177

★ APPENDIX D REVISION HISTORY

A history of the revisions up to this edition is shown below. “Applied to:” indicates the chapter to which the revision was applied.

(1/4)

Edition	Description	Applied to:

2nd	• Change of following register name
	  • 8-bit counter → 8-bit MR counter 0
	  • Serial mode register 3 → Serial operation mode register 3
	  • LCD0 mode register → LCD display mode register 0
	  • LCD0 clock select register → LCD clock control register 0
	• Change of main system clock symbol as shown below.
	  $f_X \rightarrow f_{CC}$
	• Change of example of main system clock oscillation frequency as shown below.
	  1.0 MHz → 1.2 MHz
	• Modification of description of minimum instruction execution time
		Throughout

	Timer overview table moved from **CHAPTER 7 16-BIT TIMER/EVENT COUNTER 0** to **1.8 Overview of Functions**.	CHAPTER 1 GENERAL
	Modification of **Figure 2-3. Connection Example of VR_{OUT0}, VR_{OUT1}**	CHAPTER 2 PIN FUNCTIONS
	Modification of **Table 2-1. Types of Pin I/O Circuits**	
	3.1.2 Internal data memory space Addition of descriptions to **(1) Internal high-speed RAM** and **(2) Internal expansion RAM**	CHAPTER 3 CPU ARCHITECTURE
	Modification of **Figure 4-2. Block Diagram of P00 to P06**	CHAPTER 4 PORT FUNCTION
	Addition of **Figure 4-4. Block Diagram of P22 to P27**	
	Addition of **Figure 4-5. Block Diagram of P30, P32, and P35**	
	Addition of **Figure 4-6. Block Diagram of P31 and P37**	
	Addition of **Figure 4-9. Block Diagram of P50 to P55**	
	Addition of RESET pin to **Table 4-4. Mask Option of Mask-ROM Version**	
	Modification of **Figure 5-1. Block Diagram of Clock Generator**	CHAPTER 5 CLOCK GENERATOR
	Addition of **Table 5-2. System Clock Supplied to Each Peripheral Hardware**	
	Modification of **Table 5-3. Relationship Between CPU Clock and Minimum Instruction Execution Time**	
	Modification of **Figure 5-4. External Circuit of Main System Clock Oscillator**	
	Modification of **5.5.1 Main system clock operations**	
	Total revision of **5.6.2 System clock and CPU clock switching procedure** • Modification of **Figure 5-11. System Clock and CPU Clock Switching** • Modification of descriptions in <1> to <4> • Modification of description in **Note** • Addition of **Caution 1**, modification of descriptions in **Cautions 2** and **3**	

(2/4)

Edition	Description	Applied to:
2nd	Deletion of one-shot pulse output function from **CHAPTER 7 16-BIT TIMER/EVENT COUNTER 0**	CHAPTER 7 16-BIT TIMER/EVENT COUNTER 0
	Modification of **Figure 7-1. Block Diagram of 16-Bit Timer/Event Counter 0**	
	Modification of **Table 7-2. TI00/TO0/P31 Pin Valid Edge and Capture/Compare Register Capture Trigger**	
	Modification of **Figure. 7-2. Format of 16-Bit Timer Mode Control Register 0 (TMC0)**	
	Addition of **Caution 4** to **Figure 7-3. Format of Capture/Compare Control Register 0 (CRC0)**	
	Modification of **Figure 7-4. Format of 16-Bit Timer Output Control Register 0 (TOC0)**	
	Addition of **Note** to **Figure 7-5. Format of Prescaler Mode Register 0 (PRM0)**	
	Addition of **Figure 7-11. Configuration Diagram for PPG Output**	
	Addition of **Figure 7-12. PPG Output Operation Timing**	
	Modification of **Figure 7-15. Timing of Pulse-Width Measurement Operation with Free-Running Counter and One Capture Register (with Both Edges Specified)**	
	Modification of **Figure 7-17. CR01 Capture Operation with Rising Edge Specified**	
	Modification of **Figure 7-18. Timing of Two-Pulse-Width Measurement Operation with Free-Running Counter (with Both Edges Specified)**	
	Modification of **Figure 7-20. Timing of Pulse-Width Measurement Operation with Free-Running Counter and Two Capture Registers (with Rising Edge Specified)**	
	Modification of **Figure 7-22. Timing of Pulse-Width Measurement Operation by Means of Restart (with Rising Edge Specified)**	
	7.6 Operating Cautions for 16-Bit Timer/Event Counter 0 • Modification of **Figure 7-30. Capture Register Data Retention Timing** • Modification of **Figure 7-31. Operation Timing of OVF0 Flag** • Addition of <2> to <4> to **(9) Capture operation** • Modification of <1> in **(10) Compare operation** • Addition of <2> to **(11) Edge detection**	
	Addition of **Caution 2** to **8.5.1 Interval timer operation**	CHAPTER 8 16-BIT TIMER/EVENT COUNTER 2
	Modification of **Figure 8-4. Timing of Interval Timer Operation (When Using Internal Clock)**	
	Addition of **Caution 2** to **8.5.2 External event counter operation**	
	Modification of **Figure 8-7. Timing of External Event Counter Operation**	
	Modification of **Figure 8-8. Start Timing of 16-Bit Timer Counter 2 (TM2)**	
	Modification of **Figure 9-6. Timing of Interval Timer Operation**	CHAPTER 9 8-BIT TIMERS 80 TO 83
	Modification of **Figure 9-7. Start Timing of 8-Bit Timer Counter 8n (TM8n)**	
	Modification of **Figure 10-1. Block Diagram of Watchdog Timer**	CHAPTER 10 WATCHDOG TIMER

(3/4)

Edition	Description	Applied to:
2nd	Modification of the following contents in **11.3 Sampling Output Timer/Detector Configuration** • Modification of **Note** • Addition of **Caution**	CHAPTER 11 SAMPLING OUTPUT TIMER/DETECTOR
	11.4 Sampling Output Timer/Detector Control Registers • Addition of **Cautions 15 and 16** to **Figure 11-4. Format of SMTD Control Register 0 (TSM0)** • Addition of **Caution** to **(8) SMDT sampling level setting register 0 (SMS0)**	
	Modification of **Figure 12-1. Block Diagram of MR Sampling**	CHAPTER 12 MR SAMPLING FUNCTION
	Addition of **Caution** to **(2) MRTD compare register 0 (CRM0)** in **12.3 MR Sampling Configuration**	
	Addition of **Note** to **Figure 12-2. Format of MRTD Control Register 0 (TCM0)**	
	Modification of **Figure 12-4. Format of MR Sampling Control Register 0 (MRM0)**	
	Modification of **12.6 Phase Detector Operation**	
	Modification of **Figure 13-1. Block Diagram of Clock Output Controller**	CHAPTER 13 CLOCK OUTPUT CONTROLLER
	(2) Communication operation in **14.3 Control Registers of Serial Interface UART2** • Modification of **Figure 14-7. Generation Timing of Asynchronous Serial Interface Transmission Completion Interrupt Request** • Addition of **Caution 3** to **Figure 14-7. Generation Timing of Asynchronous Serial Interface Transmission Completion Interrupt Request** • Addition of **Note** to **(d) Reception** • Modification of **Figure 14-8. Generation Timing of Asynchronous Serial Interface Reception Completion Interrupt Request** • Modification of **Figure 14-9. Receive Error Timing** • Addition of **(f) Clearing of RXE2 during UART2 reception**	CHAPTER 14 SERIAL INTERFACE UART2
	Addition of **Note 1** and **Caution 3** to **Figure 16-3. Format of LCD Display Mode Register 0 (LCDM0)**	CHAPTER 16 LCD CONTROLLER/DRIVER
	Addition of **Caution** to **Figure 16-4. Format of LCD Clock Control Register 0 (LCDC0)**	
	Total revision of **16.8 Display Mode**	
	Addition of **Caution 3** to **Figure 17-2. Format of Interrupt Request Flag Registers**	CHAPTER 17 INTERRUPT FUNCTIONS
	Addition of **Figure 18-1. Standby Function**	CHAPTER 18 STANDBY FUNCTION
	Addition of **(2) Release by non-maskable interrupt request** in **18.2.2 Releasing HALT mode**	

(4/4)

Edition	Description	Applied to:
2nd	Modification of **Caution 1** in **CHAPTER 19 RESET FUNCTION**	CHAPTER 19 RESET FUNCTION
	Modification of **Figure 19-2. Reset Timing by $\overline{\text{RESET}}$ Input**	
	Modification of **Figure 19-3. Reset Timing by Watchdog Timer Overflow**	
	Addition of **Figure 19-4. Reset Timing After Power Application**	
	Modification of **Caution 5** in **Table 19-1. Hardware Status After Reset**	
	Addition of **CHAPTER 20 μPD78F0958 (REFERENCE)**	CHAPTER 20 μPD78F0958 (REFERENCE)
	Addition of **CHAPTER 22 SUB-HALT TEST PROGRAM**	CHAPTER 22 SUB-HALT TEST PROGRAM
	Addition of **CHAPTER 23 ELECTRICAL SPECIFICATIONS**	CHAPTER 23 ELECTRICAL SPECIFICATIONS
	Addition of **CHAPTER 24 PACKAGE DRAWING**	CHAPTER 24 PACKAGE DRAWING
	Addition of **CHAPTER 25 RECOMMENDED SOLDERING CONDITIONS**	CHAPTER 25 RECOMMENDED SOLDERING CONDITIONS
	Modification of **APPENDIX A DEVELOPMENT TOOLS**	APPENDIX A DEVELOPMENT TOOLS
	Addition of **APPENDIX B NOTES ON TARGET SYSTEM DESIGN**	APPENDIX B NOTES ON TARGET SYSTEM DESIGN
	Addition of **APPENDIX D REVISION HISTORY**	APPENDIX D REVISION HISTORY