NEC

MOS INTEGRATED CIRCUIT

μPD720101

USB2.0 HOST CONTROLLER

The μPD720101 complies with the Universal Serial Bus Specification Revision 2.0 and Open Host Controller Interface Specification for full-/low-speed signaling and Intel's Enhanced Host Controller Interface Specification for high-speed signaling and works up to 480 Mbps. The μPD720101 is integrated 3 host controller cores with PCI interface and USB2.0 transceivers into a single chip.

Detailed function descriptions are provided in the following user's manual. Be sure to read the manual before designing.

μPD720101 User's Manual: S16336E

FEATURES

- Compliant with Universal Serial Bus Specification Revision 2.0 (Data rate 1.5/12/480 Mbps)
- Compliant with Open Host Controller Interface Specification for USB Rev 1.0a
- Compliant with Enhanced Host Controller Interface Specification for USB Rev 1.0
- PCI multi-function device consists of two OHCI host controller cores for full-/low-speed signaling and one EHCI host controller core for high-speed signaling.
- Root hub with 5 (max.) downstream facing ports which are shared by OHCI and EHCI host controller cores.
- All downstream facing ports can handle high-speed (480 Mbps), full-speed (12 Mbps), and low-speed (1.5 Mbps) transaction.
- Configurable number of downstream facing ports (2 to 5)
- 32-bit 33 MHz host interface compliant to PCI Specification release 2.2
- Supports PCI Mobile Design Guide Revision 1.1
- Supports PCI-Bus Power Management Interface Specification release 1.1
- PCI bus bus-master access
- System clock is generated by 30 MHz X'tal or 48 MHz clock input.
  - System clock frequency should be set from system software (BIOS) or EEPROM. More detail, see μPD720101 User's Manual.
- Operational registers direct-mapped to PCI memory space
- Legacy support for all downstream facing ports. Legacy support features allow easy migration for motherboard implementation.
- 3.3 V power supply, PCI signal pins have 5 V tolerant circuit.

ORDERING INFORMATION

Part Number	Package
μPD720101GJ-UEN	144-pin plastic LQFP (Fine pitch) (20 × 20)
μPD720101F1-EA8	144-pin plastic FBGA (12 × 12)

The information in this document is subject to change without notice. Before using this document, please confirm that this is the latest version.
Not all products and/or types are available in every country. Please check with an NEC Electronics sales representative for availability and additional information.

Document No. S16265EJ4V0DS00 (4th edition)
Date Published June 2004 NS CP (N)
Printed in Japan

The mark ★ shows major revised points.

© NEC Electronics Corporation 2002

BLOCK DIAGRAM

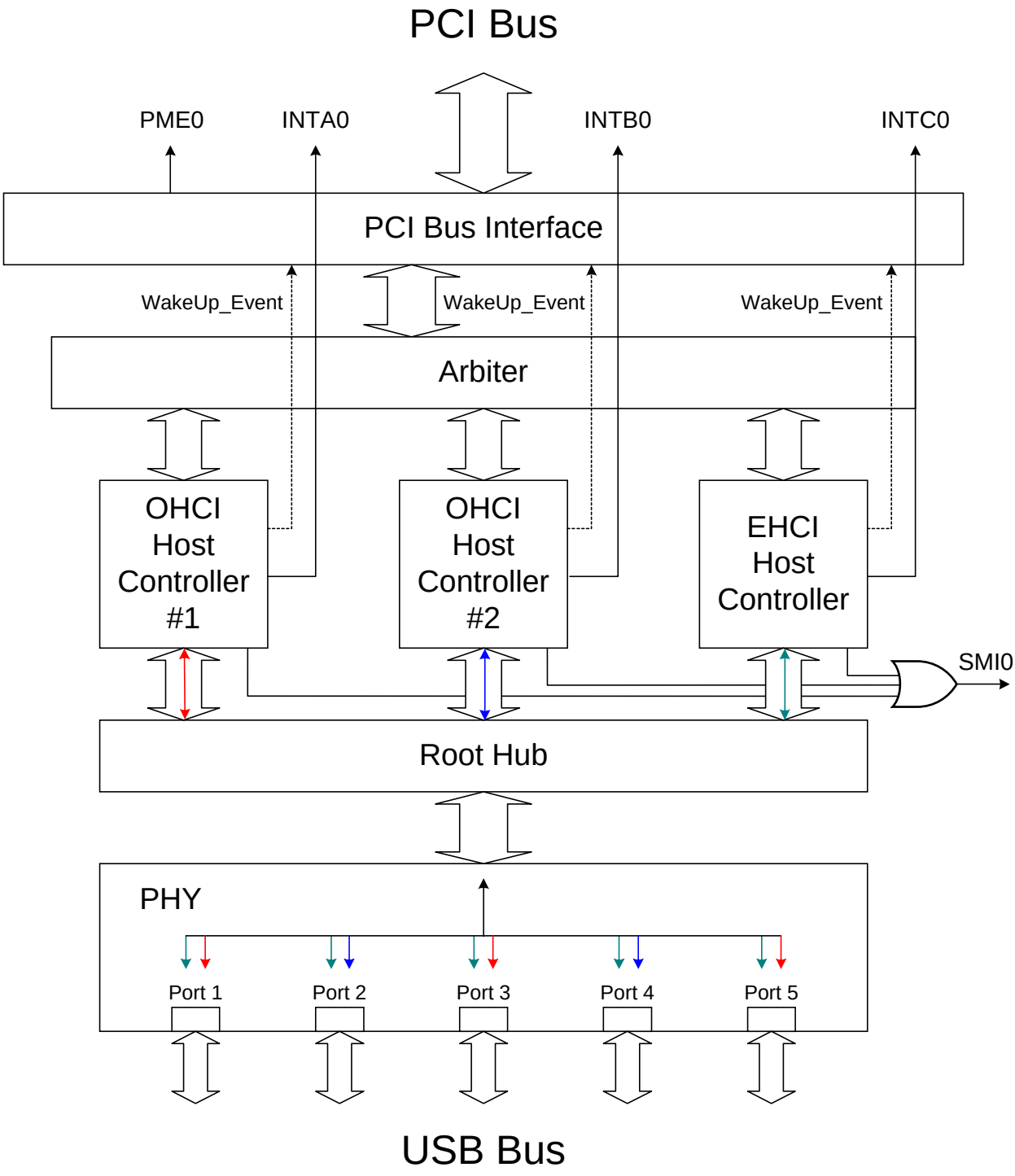

Remark INTB0/INTC0 can be shared with INTA0 through BIOS setting. (Planning)

PCI Bus Interface : handles 32-bit 33 MHz PCI bus master and target function which comply with PCI specification release 2.2. The number of enabled ports is set by bit in configuration space.

Arbiter : arbitrates among two OHCI host controller cores and one EHCI host controller core.

OHCI Host Controller #1 : handles full- (12 Mbps)/low-speed (1.5 Mbps) signaling at port 1, 3, and 5.

OHCI Host Controller #2 : handles full- (12 Mbps)/low-speed (1.5 Mbps) signaling at port 2 and 4.

EHCI Host Controller : handles high- (480 Mbps) signaling at port 1, 2, 3, 4, and 5.

Root Hub : handles USB hub function in host controller and controls connection (routing) between host controller core and port.

PHY : consists of high-speed transceiver, full-/low-speed transceiver, serializer, deserializer, etc.

INTA0 : is the PCI interrupt signal for OHCI Host Controller #1.

INTB0 : is the PCI interrupt signal for OHCI Host Controller #2.

INTC0 : is the PCI interrupt signal for EHCI Host Controller.

SMI0 : is the interrupt signal which is specified by Open Host Controller Interface Specification for USB Rev 1.0a and Enhanced Host Controller Interface Specification Rev 1.0. The SMI signal of each OHCI Host Controller and EHCI Host Controller appears at this signal.

PME0 : is the interrupt signal which is specified by PCI-Bus Power Management Interface Specification release 1.1. Wakeup signal of each host controller core appears at this signal.

COMPARISON WITH THE μPD720100A

	μPD720100A	μPD720101 (2nd generation)
EHCI revision	0.95	1.0
EHCI	1	1
OHCI	2	2
Legacy support	Parallel IRQ out support	No parallel IRQ support
Clock	48 MHz OSC or 30 MHz OSC/X'tal	48 MHz OSC or 30 MHz X'tal
Package	176-pin BGA (FP) or 160-pin LQFP	144-pin BGA (FP) or 144-pin LQFP

PIN CONFIGURATION

- **144-pin plastic LQFP (Fine pitch) (20 × 20)**

μPD720101GJ-UEN

Top View

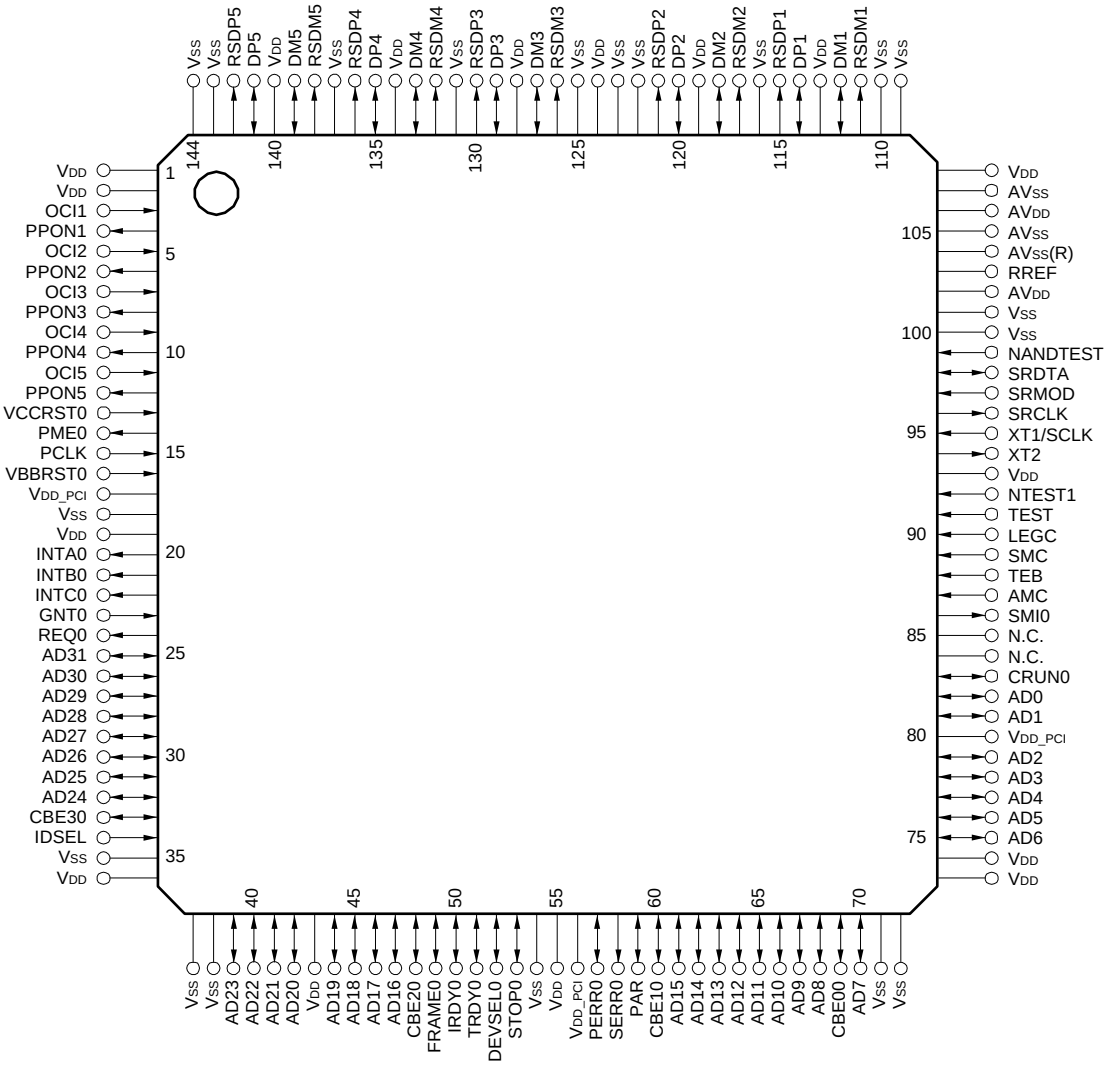

Pin No.	Pin Name	Pin No.	Pin Name	Pin No.	Pin Name	Pin No.	Pin Name
1	V_{DD}	37	V_{SS}	73	V_{DD}	109	V_{SS}
2	V_{DD}	38	V_{SS}	74	V_{DD}	110	V_{SS}
3	OCI1	39	AD23	75	AD6	111	RSDM1
4	PPON1	40	AD22	76	AD5	112	DM1
5	OCI2	41	AD21	77	AD4	113	V_{DD}
6	PPON2	42	AD20	78	AD3	114	DP1
7	OCI3	43	V_{DD}	79	AD2	115	RSDP1
8	PPON3	44	AD19	80	V_{DD_PCI}	116	V_{SS}
9	OCI4	45	AD18	81	AD1	117	RSDM2
10	PPON4	46	AD17	82	AD0	118	DM2
11	OCI5	47	AD16	83	CRUN0	119	V_{DD}
12	PPON5	48	CBE20	84	N.C.	120	DP2
13	VCCRST0	49	FRAME0	85	N.C.	121	RSDP2
14	PME0	50	IRDY0	86	SMI0	122	V_{SS}
15	PCLK	51	TRDY0	87	AMC	123	V_{SS}
16	VBBRST0	52	DEVSEL0	88	TEB	124	V_{DD}
17	V_{DD_PCI}	53	STOP0	89	SMC	125	V_{SS}
18	V_{SS}	54	V_{SS}	90	LEGC	126	RSDM3
19	V_{DD}	55	V_{DD}	91	TEST	127	DM3
20	INTA0	56	V_{DD_PCI}	92	NTEST1	128	V_{DD}
21	INTB0	57	PERR0	93	V_{DD}	129	DP3
22	INTC0	58	SERR0	94	XT2	130	RSDP3
23	GNT0	59	PAR	95	XT1/SCLK	131	V_{SS}
24	REQ0	60	CBE10	96	SRCLK	132	RSDM4
25	AD31	61	AD15	97	SRMOD	133	DM4
26	AD30	62	AD14	98	SRDTA	134	V_{DD}
27	AD29	63	AD13	99	NANDTEST	135	DP4
28	AD28	64	AD12	100	V_{SS}	136	RSDP4
29	AD27	65	AD11	101	V_{SS}	137	V_{SS}
30	AD26	66	AD10	102	AV_{DD}	138	RSDM5
31	AD25	67	AD9	103	RREF	139	DM5
32	AD24	68	AD8	104	AV_{SS}(R)	140	V_{DD}
33	CBE30	69	CBE00	105	AV_{SS}	141	DP5
34	IDSEL	70	AD7	106	AV_{DD}	142	RSDP5
35	V_{SS}	71	V_{SS}	107	AV_{SS}	143	V_{SS}
36	V_{DD}	72	V_{SS}	108	V_{DD}	144	V_{SS}

Remark AV_{SS}(R) should be used to connect RREF through 1 % precision reference resistor of 9.1 kΩ.
Pins 84 and 85 must be clamped high on the board.

- **144-pin plastic FBGA (12 × 12)**

μPD720101F1-EA8

Bottom View

	25	26	27	28	29	30	31	32	33	34	35	36		14
24	71	72	73	74	75	76	77	78	79	80	81	82	37	13
23	70	111	112	113	114	115	116	117	118	119	120	83	38	12
22	69	110			137	138	139	140			121	84	39	11
21	68	109									122	85	40	10
20	67	108	136							141	123	86	41	9
19	66	107	135							142	124	87	42	8
18	65	106	134							143	125	88	43	7
17	64	105	133							144	126	89	44	6
16	63	104									127	90	45	5
15	62	103			132	131	130	129			128	91	46	4
14	61	102	101	100	99	98	97	96	95	94	93	92	47	3
13	60	59	58	57	56	55	54	53	52	51	50	49	48	2
	12	11	10	9	8	7	6	5	4	3	2	1		1
P	N	M	L	K	J	H	G	F	E	D	C	B	A	

Pin No.	Pin Name	Pin No.	Pin Name	Pin No.	Pin Name	Pin No.	Pin Name
1	V_{SS}	37	V_{DD}	73	V_{DD}	109	NANDTEST
2	AD23	38	V_{DD}	74	RSDP1	110	V_{SS}
3	AD20	39	PPON2	75	V_{DD}	111	AV_{SS}
4	AD18	40	OCI4	76	V_{DD}	112	V_{SS}
5	CBE20	41	PPON5	77	DP3	113	DM2
6	TRDY0	42	PCLK	78	V_{DD}	114	RSDP2
7	SERR0	43	INTC0	79	RSDM5	115	V_{SS}
8	AD15	44	AD31	80	V_{DD}	116	V_{DD}
9	AD12	45	AD28	81	DP5	117	RSDM4
10	AD9	46	AD25	82	V_{SS}	118	DP4
11	AD7	47	V_{DD}	83	OCI1	119	V_{SS}
12	V_{SS}	48	V_{SS}	84	OCI2	120	PPON1
13	V_{DD}	49	V_{SS}	85	OCI3	121	PPON3
14	V_{DD}	50	AD22	86	OCI5	122	PPON4
15	AD3	51	AD21	87	VBBRST0	123	VCCRST0
16	AD1	52	V_{DD}	88	INTB0	124	V_{DD_PCI}
17	N.C.	53	AD16	89	AD30	125	INTA0
18	AMC	54	DEVSEL0	90	AD26	126	REQ0
19	XT2	55	PERR0	91	AD24	127	AD29
20	SRMOD	56	AD14	92	IDSEL	128	AD27
21	V_{SS}	57	AD10	93	CBE30	129	IRDY0
22	RREF	58	AD8	94	AD19	130	V_{SS}
23	V_{DD}	59	CBE00	95	AD17	131	V_{DD}
24	AV_{SS}	60	V_{SS}	96	FRAME0	132	PAR
25	V_{SS}	61	AD6	97	STOP0	133	SMI0
26	RSDM1	62	AD4	98	V_{DD_PCI}	134	LEGC
27	DP1	63	AD2	99	CBE10	135	TEST
28	RSDM2	64	CRUN0	100	AD13	136	XT1/SCLK
29	DP2	65	TEB	101	AD11	137	V_{SS}
30	V_{SS}	66	V_{DD}	102	AD5	138	RSDM3
31	RSDP3	67	SRDTA	103	V_{DD_PCI}	139	DM3
32	DM4	68	AV_{DD}	104	AD0	140	V_{SS}
33	RSDP4	69	AV_{SS}(R)	105	N.C.	141	PME0
34	DM5	70	AV_{DD}	106	SMC	142	V_{SS}
35	RSDP5	71	V_{SS}	107	NTEST1	143	V_{DD}
36	V_{SS}	72	DM1	108	SRCLK	144	GNT0

Remark AV_{SS}(R) should be used to connect RREF through 1 % precision reference resistor of 9.1 kΩ.
Pins 17 and 105 must be clamped high on the board.

1. PIN INFORMATION

(1/2)

Pin Name	I/O	Buffer Type	Active Level	Function
AD (31 : 0)	I/O	5 V PCI I/O		PCI “AD [31 : 0]” signal
CBE (3 : 0)0	I/O	5 V PCI I/O		PCI “C/BE [3 : 0]” signal
PAR	I/O	5 V PCI I/O		PCI “PAR” signal
FRAME0	I/O	5 V PCI I/O		PCI “FRAME#” signal
IRDY0	I/O	5 V PCI I/O		PCI “IRDY#” signal
TRDY0	I/O	5 V PCI I/O		PCI “TRDY#” signal
STOP0	I/O	5 V PCI I/O		PCI “STOP#” signal
IDSEL	I	5 V PCI input		PCI “IDSEL” signal
DEVSEL0	I/O	5 V PCI I/O		PCI “DEVSEL#” signal
REQ0	O	5 V PCI output		PCI “REQ#” signal
GNT0	I	5 V PCI input		PCI “GNT#” signal
PERR0	I/O	5 V PCI I/O		PCI “PERR#” signal
SERR0	O	5 V PCI N-ch open drain		PCI “SERR#” signal
INTA0	O	5 V PCI N-ch open drain	Low	PCI “INTA#” signal
INTB0	O	5 V PCI N-ch open drain	Low	PCI “INTB#” signal
INTC0	O	5 V PCI N-ch open drain	Low	PCI “INTC#” signal
PCLK	I	5 V PCI input		PCI “CLK” signal
VBBRST0	I	5 V tolerant input	Low	Hardware reset for chip
CRUN0	I/O	5 V PCI I/O		PCI “CLKRUN#” signal
PME0	O	5 V PCI N-ch open drain	Low	PCI “PME#” signal
VCCRST0	I	5 V tolerant input	Low	Reset for power management
SMI0	O	5 V tolerant N-ch open drain	Low	System management interrupt output
XT1/SCLK	I	Input		System clock input or oscillator in
XT2	O	Output		oscillator out
DP (5 : 1)	I/O	USB high speed D+ I/O		USB high speed D+ signal
DM (5 : 1)	I/O	USB high speed D− I/O		USB high speed D− signal
RSDP (5 : 1)	O	USB full speed D+ Output		USB full speed D+ signal
RSDM (5 : 1)	O	USB full speed D− Output		USB full speed D− signal
OCI (5 : 1)	I (I/O)	Input	Low	USB root hub port’s overcurrent status input
PPON (5 : 1)	O (I/O)	Output	High	USB root hub port’s power supply control output
LEGC	I (I/O)	Input	High	Legacy support switch
SRCLK	O	Output		Serial ROM clock out
SRDTA	I/O	I/O		Serial ROM data
SRMOD	I	Input with 50 kΩ pull down R	High	Serial ROM input enable
RREF	A	Analog		Reference resistor
NTEST1	I	Input with 12 kΩ pull down R	High	Test pin

(2/2)

Pin Name	I/O	Buffer Type	Active Level	Function
SMC	I	Input with 50 kΩ pull down R	High	Scan mode control
TEB	I	Input with 50 kΩ pull down R	High	BIST enable
AMC	I	Input with 50 kΩ pull down R	High	ATG mode control
TEST	I	Input with 50 kΩ pull down R	High	Test control
NANDTEST	I	Input with 50 kΩ pull down R	High	NAND tree test enable
AV_{DD}				V_{DD} for analog circuit
V_{DD}				V_{DD}
V_{DD_PCI}				5 V (5 V PCI) or 3.3 V (3.3 V PCI)
AV_{SS}				V_{SS} for analog circuit
V_{SS}				V_{SS}
N.C.				No connection

Remarks 1. “5 V tolerant“ means that the buffer is 3 V buffer with 5 V tolerant circuit.

2. “5 V PCI” indicates a PCI buffer, which complies with the 3 V PCI standard, has a 5 V tolerant circuit. It does not indicate that this buffer fully complies with 5 V PCI standard. However, this function can be used for evaluating the operation of a device on a 5 V add-in card.

3. The signal marked as “(I/O)” in the above table operates as I/O signals during testing. However, they do not need to be considered in normal use.

2. HOW TO CONNECT TO EXTERNAL ELEMENTS

2.1 Handling Unused Pins

To realize less than 5 ports host controller implementation, appropriate value shall be set to Port No field in EXT1 register. And unused pins shall be connected as shown below.

Pin	Direction	Connection Method
DPx	I/O	Tied to "low".
DMx	I/O	Tied to "low".
RSDPx	O	No connection (Open)
RSDMx	O	No connection (Open)
OCIx	I	“H” clamp
PPONx	O	No connection (Open)

2.2 USB Port Connection

Figure 2-1. USB Downstream Port Connection

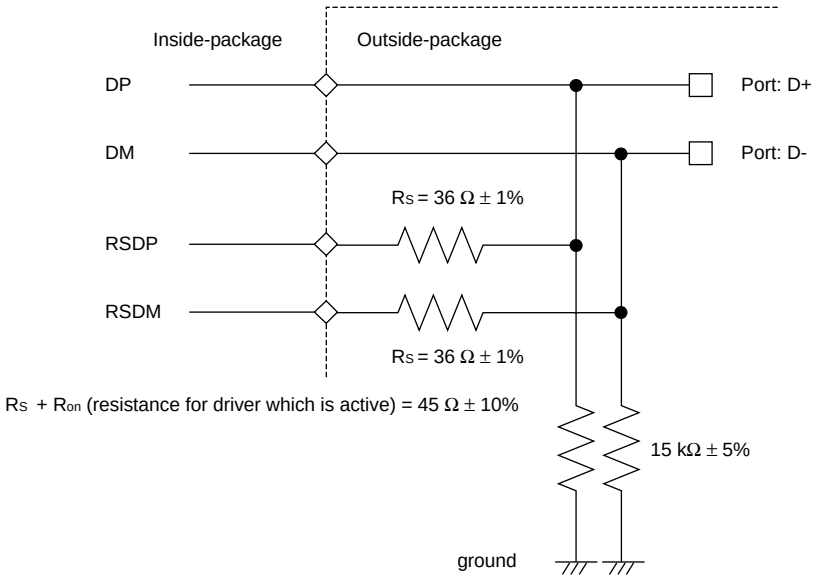

2.3 PLL Capacitor Connection

Figure 2-2. RREF Connection

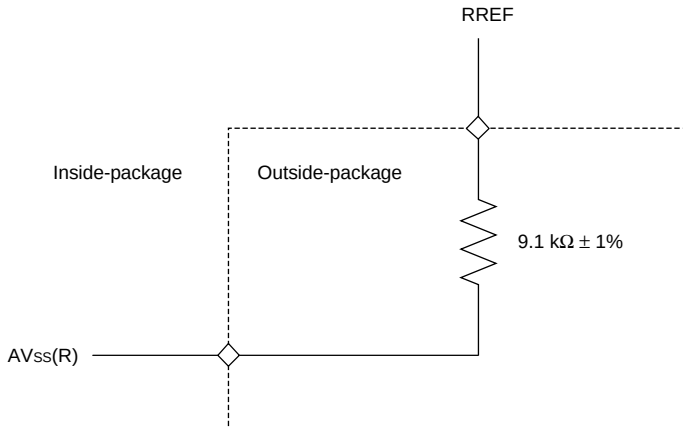

2.4 X'tal Connection

Figure 2-3. X'tal Connection

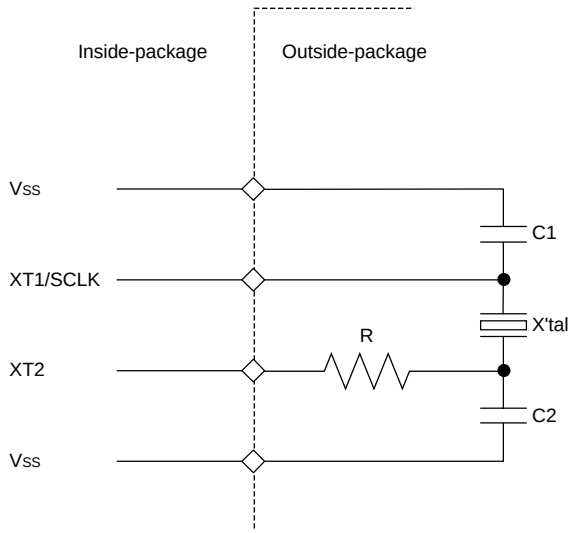

The following crystals are evaluated on our reference design board. Table 2-1 shows the external parameters.

Table 2-1. External Parameters

Vender	X'tal	R	C1	C2
KDS Note 1	AT-49 30.000 MHz	100 Ω	12 pF	10 pF
NDK Note 2	AT-41 30.000 MHz	100 Ω	10 pF	10 pF
	AT-41CD2 30.000 MHz	100 Ω	10 pF	10 pF
	NX3225DA 30.000 MHz	100 Ω	10 pF	10 pF
	NX5032GA 30.000 MHz	100 Ω	10 pF	10 pF
	NX8045GB 30.000 MHz	100 Ω	10 pF	10 pF

Notes 1. DAISHINKU CORP.
2. NIHON DEMPA KOGYO CO., LTD.

In using these crystals, contact KDS or NDK to get the specification on external components to be used in conjunction with the crystal.

KDS's home page: http://www.kdsj.co.jp
NDK's home page: http://www.ndk-j.co.jp

★ 2.5 External Serial ROM Connection

Figure 2-4. External Serial ROM Connection

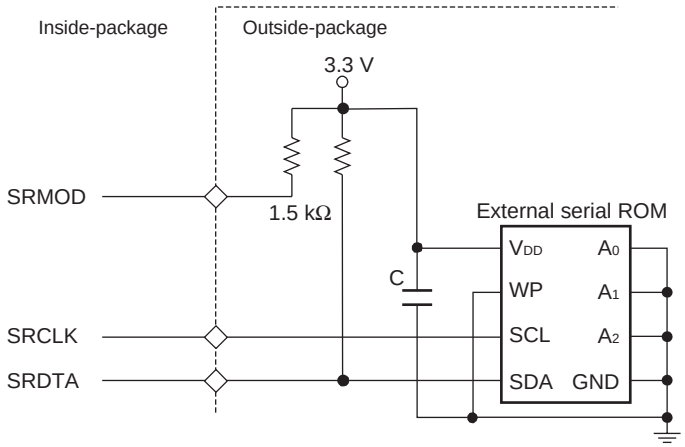

These pins for external serial ROM can be opened, when serial ROM is not necessary on board.

3. ELECTRICAL SPECIFICATIONS

3.1 Buffer List

- 3 V input buffer with pull down resistor
  NTEST1, TEST, SRMOD, NANDTEST, SMC, AMC, TEB
- 3 V PCI I_{OL} = 9 mA 3-state output buffer
  PPON(5:1), SRCLK
- 3 V I_{OL} = 9 mA bi-directional buffer
  LEGC, SRDTA
- 3 V I_{OL} = 9 mA bi-directional buffer with enable (OR type)
  OCI(5:1)
- 3 V oscillator interface
  XT1/SCLK, XT2
- 5 V input buffer
  VBBRST0, VCCRST0
- 5 V I_{OL} = 12 mA N-ch open drain buffer
  SMI0, PME0, INTA0, INTB0, INTC0, SERR0
- 5 V PCI input buffer with enable (OR type)
  PCLK, GNT0, IDSEL
- 5 V PCI I_{OL} = 12 mA 3-state output buffer
  REQ0
- 5 V PCI I_{OL} = 9 mA bi-directional buffer with input enable (OR-type)
  AD(31:0), CBE(3:0)0, PAR, FRAME0, IRDY0, TRDY0, STOP0, DEVSEL0, PERR0, CRUN0
- USB interface, analog signal
  DP(5:1), DM(5:1), RSDP(5:1), RSDM(5:1), RREF

Above, “5 V” refers to a 3 V buffer with 5 V tolerant circuit. Therefore, it is possible to have a 5 V connection for an external bus, but the output level will be only up to 3 V, which is the V_{DD} voltage. Similarly, “5 V PCI” above refers to a PCI buffer that has a 5 V tolerant circuit, which meets the 3 V PCI standard; it does not refer to a PCI buffer that meets the 5 V PCI standard.

3.2 Terminology

Terms Used in Absolute Maximum Ratings

Parameter	Symbol	Meaning
Power supply voltage	V_{DD}, AV_{DD}, V_{DD_PCI}	Indicates voltage range within which damage or reduced reliability will not result when power is applied to a V_{DD} pin.
Input voltage	V_I	Indicates voltage range within which damage or reduced reliability will not result when power is applied to an input pin.
Output voltage	V_O	Indicates voltage range within which damage or reduced reliability will not result when power is applied to an output pin.
Operating ambient temperature	T_A	Indicates the ambient temperature range for normal logic operations.
Storage temperature	T_{stg}	Indicates the element temperature range within which damage or reduced reliability will not result while no voltage or current are applied to the device.

Terms Used in Recommended Operating Range

Parameter	Symbol	Meaning
Power supply voltage	V_{DD}, AV_{DD}, V_{DD_PCI}	Indicates the voltage range for normal logic operations occur when V_{SS} = 0 V.
High-level input voltage	V_{IH}	Indicates the voltage, which is applied to the input pins of the device, is the voltage indicates that the high level states for normal operation of the input buffer. * If a voltage that is equal to or greater than the “Min.” value is applied, the input voltage is guaranteed as high level voltage.
Low-level input voltage	V_{IL}	Indicates the voltage, which is applied to the input pins of the device, is the voltage indicates that the low level states for normal operation of the input buffer. * If a voltage that is equal to or lesser than the “Max.” value is applied, the input voltage is guaranteed as low level voltage.

Terms Used in DC Characteristics

Parameter	Symbol	Meaning
Off-state output leakage current	I_{OZ}	Indicates the current that flows from the power supply pins when the rated power supply voltage is applied when a 3-state output has high impedance.
Output short circuit current	I_{OS}	Indicates the current that flows when the output pin is shorted (to GND pins) when output is at high-level.
Input leakage current	I_I	Indicates the current that flows when the input voltage is supplied to the input pin.
Low-level output current	I_{OL}	Indicates the current that flows to the output pins when the rated low-level output voltage is being applied.
High-level output current	I_{OH}	Indicates the current that flows from the output pins when the rated high-level output voltage is being applied.

3.3 Electrical Specifications

Absolute Maximum Ratings

Parameter	Symbol	Condition	Rating	Unit
Power supply voltage	V_{DD}		–0.5 to +4.6	V
	AV_{DD}		–0.5 to +4.6	V
	V_{DD_PCI}		–0.5 to +6.0	V
Input voltage, 5 V buffer	V_I	3.0 V ≤ V_{DD} ≤ 3.6 V V_I < V_{DD} + 3.0 V	–0.5 to +6.6	V
Input voltage, 3.3 V buffer	V_I	3.0 V ≤ V_{DD} ≤ 3.6 V V_I < V_{DD} + 0.5 V	–0.5 to +4.6	V
Output voltage, 5 V buffer	V_O	3.0 V ≤ V_{DD} ≤ 3.6 V V_O < V_{DD} + 3.0 V	–0.5 to +6.6	V
Output voltage, 3.3 V buffer	V_O	3.0 V ≤ V_{DD} ≤ 3.6 V V_O < V_{DD} + 0.5 V	–0.5 to +4.6	V
Operating ambient temperature	T_A		0 to +70	°C
Storage temperature	T_{stg}		–65 to +150	°C

Caution Product quality may suffer if the absolute maximum rating is exceeded even momentarily for any parameters. That is, the absolute maximum ratings are rated values at which the product is on the verge of suffering physical damage, and therefore the product must be used under conditions that ensure that the absolute maximum ratings are not exceeded.

The ratings and conditions indicated for DC characteristics and AC characteristics represent the quality assurance range during normal operation.

Recommended Operating Ranges

Parameter	Symbol	Condition	Min.	Typ.	Max.	Unit
Operating voltage	V_{DD}		3.0	3.3	3.6	V
	AV_{DD}		3.0	3.3	3.6	V
	V_{DD_PCI}	In 3.3 V PCI	3.0	3.3	3.6	V
		In 5 V PCI	4.75	5.0	5.25	V
High-level input voltage	V_{IH}					
3.3 V high-level input voltage			2.0		V_{DD}	V
5.0 V high-level input voltage			2.0		5.5	V
Low-level input voltage	V_{IL}					
3.3 V low-level input voltage			0		0.8	V
5.0 V low-level input voltage			0		0.8	V

DC Characteristics (V_{DD} = 3.0 to 3.6 V, T_A = 0 to +70°C)

Control pin block

Parameter	Symbol	Condition	Min.	Max.	Unit
Off-state output current	I_{OZ}	$V_O = V_{DD}$ or V_{SS}		±10	μA
Output short circuit current	I_{OS} Note			−250	mA
Low-level output current	I_{OL}				
3.3 V low-level output current		V_{OL} = 0.4 V	9.0		mA
3.3 V low-level output current		V_{OL} = 0.4 V	3.0		mA
5.0 V low-level output current		V_{OL} = 0.4 V	12.0		mA
5.0 V low-level output current		V_{OL} = 0.4 V	6.0		mA
High-level output current	I_{OH}				
3.3 V high-level output current		V_{OH} = 2.4 V	−9.0		mA
3.3 V high-level output current		V_{OH} = 2.4 V	−3.0		mA
5.0 V high-level output current		V_{OH} = 2.4 V	−2.0		mA
5.0 V high-level output current		V_{OH} = 2.4 V	−2.0		mA
Input leakage current	I_I				
3.3 V buffer		$V_I = V_{DD}$ or V_{SS}		±10	μA
3.3 V buffer with 50 kΩ PD		$V_I = V_{DD}$		191	μA
5.0 V buffer		$V_I = V_{DD}$ or V_{SS}		±10	μA

Note The output short circuit time is one second or less and is only for one pin on the LSI.

PCI interface block

Parameter	Symbol	Condition	Min.	Max.	Unit
High-level input voltage	V_{IH}		2.0	5.25	V
Low-level input voltage	V_{IL}		0	0.8	V
Low-level output current	I_{OL}	V_{OL} = 0.4 V	12.0		mA
High-level output current	I_{OH}	V_{OH} = 2.4 V	−2.0		mA
Input high leakage current	I_{IH}	V_{IN} = 2.7 V		70	μA
Input low leakage current	I_{IL}	V_{IN} = 0.5 V		−70	μA
PME0 leakage current	I_{OFF}	V_O < 3.6 V V_{CC} off or floating		1	μA

USB interface block

Parameter	Symbol	Conditions	Min.	Max.	Unit
Serial resistor between DP (DM) and RSDP (RSDM)	R_S		35.64	36.36	Ω
Output pin impedance	Z_{HSDRV}	Includes R_S resistor	40.5	49.5	Ω
Input Levels for Low-/full-speed:					
High-level input voltage (drive)	V_{IH}		2.0		V
High-level input voltage (floating)	V_{IHZ}		2.7	3.6	V
Low-level input voltage	V_{IL}			0.8	V
Differential input sensitivity	V_{DI}	$\lvert(D+) - (D-)\rvert$	0.2		V
Differential common mode range	V_{CM}	Includes V_{DI} range	0.8	2.5	V
Output Levels for Low-/full-speed:					
High-level output voltage	V_{OH}	R_L of 14.25 kΩ to GND	2.8	3.6	V
Low-level output voltage	V_{OL}	R_L of 1.425 kΩ to 3.6 V	0.0	0.3	V
SE1	V_{OSE1}		0.8		V
Output signal crossover point voltage	V_{CRS}		1.3	2.0	V
Input Levels for High-speed:					
High-speed squelch detection threshold (differential signal)	V_{HSSQ}		100	150	mV
High-speed disconnect detection threshold (differential signal)	V_{HSDSC}		525	625	mV
High-speed data signaling common mode voltage range	V_{HSCM}		−50	+500	mV
High-speed differential input signaling level	See **Figure 3-4**.				
Output Levels for High-speed:					
High-speed idle state	V_{HSOI}		−10	+10	mV
High-speed data signaling high	V_{HSOH}		360	440	mV
High-speed data signaling low	V_{HSOL}		−10	+10	mV
Chirp J level (differential signal)	V_{CHIRPJ}		700	1100	mV
Chirp K level (differential signal)	V_{CHIRPK}		−900	−500	mV

Figure 3-1. Differential Input Sensitivity Range for Low-/full-speed

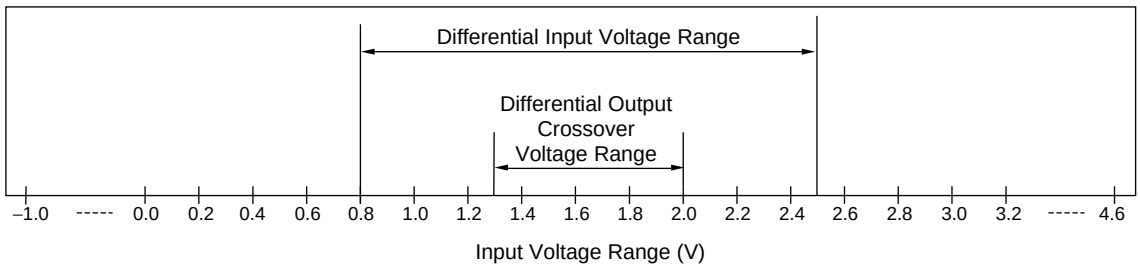

Figure 3-2. Full-speed Buffer V_{OH}/I_{OH} Characteristics for High-speed Capable Transceiver

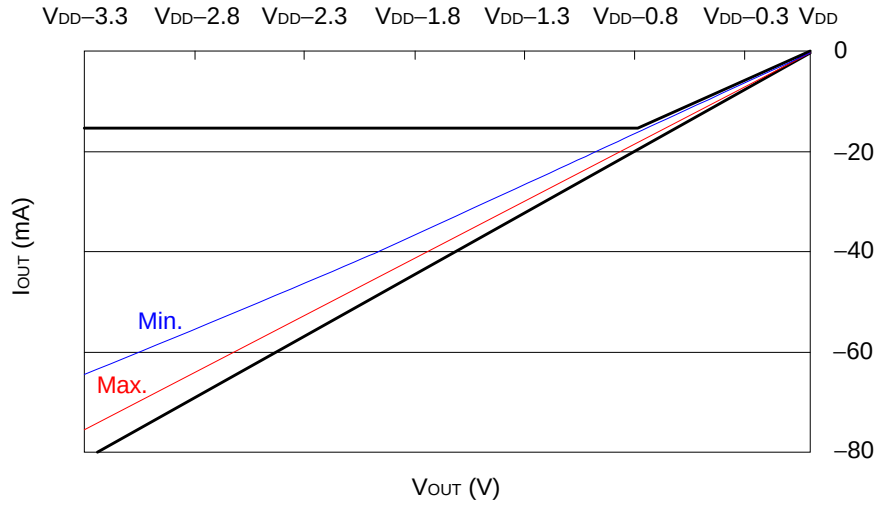

Figure 3-3. Full-speed Buffer V_{OL}/I_{OL} Characteristics for High-speed Capable Transceiver

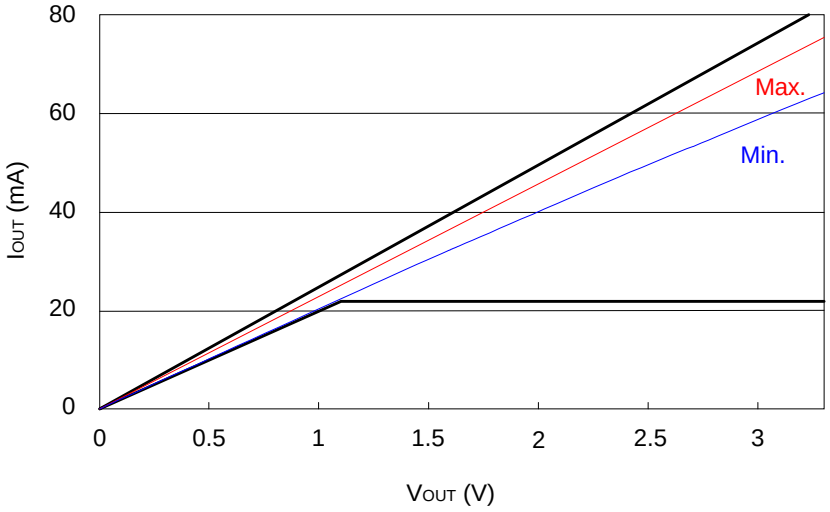

Figure 3-4. Receiver Sensitivity for Transceiver at DP/DM

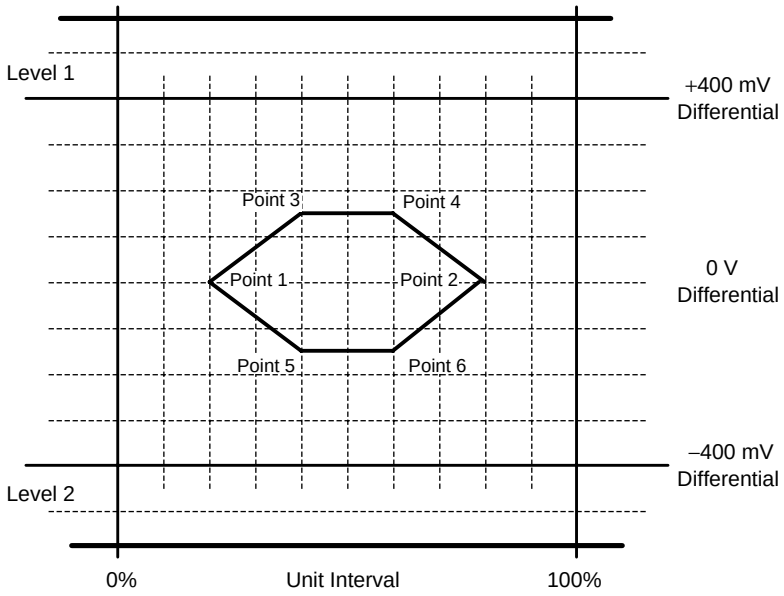

Figure 3-5. Receiver Measurement Fixtures

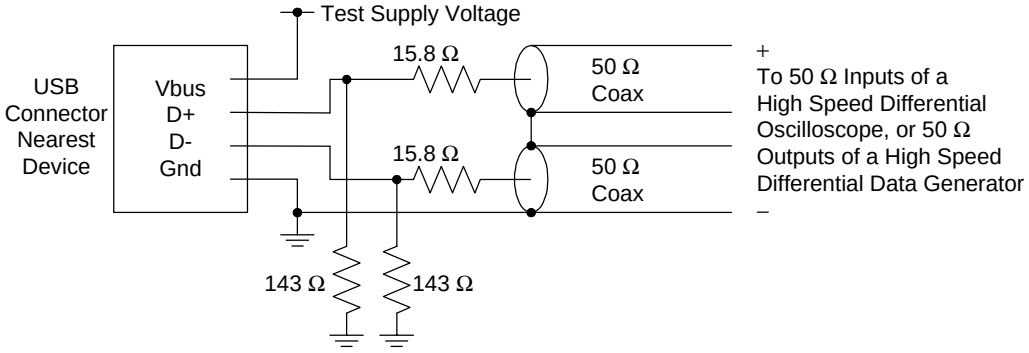

Pin capacitance

Parameter	Symbol	Condition	Min.	Max.	Unit
Input capacitance	C_I	V_{DD} = 0 V, T_A = 25°C	6	8	pF
Output capacitance	C_O	f_C = 1 MHz	10	12	pF
I/O capacitance	C_{IO}	Unmeasured pins returned to 0 V	10	12	pF
PCI input pin capacitance	C_{in}			8	pF
PCI clock input pin capacitance	C_{clk}		6	8	pF
PCI IDSEL input pin capacitance	C_{IDSEL}			8	pF

Power consumption

Parameter	Symbol	Condition	Typ. (30 MHz X'tal)	Typ. (48 MHz OSC)	Unit
Power Consumption	P_{WD0-0}	Device state = D0, All the ports does not connect to any function, and each OHCI controller is under UsbSuspend and EHCI controller is stopped. Note1	31.4	10.4	mA
	P_{WD0-2}	The power consumption under the state without suspend. Device state = D0, The number of active ports is 2. Note2			
		Full- or low-speed device(s) is (are) on the port.	53.1	31.9	mA
		High-speed device(s) is (are) on the port.	204.6	204.2	mA
	P_{WD0-3}	The power consumption under the state without suspend. Device state = D0, The number of active ports is 3. Note2			
		Full- or low-speed device(s) is (are) on the port.	55.3	34.2	mA
		High-speed device(s) is (are) on the port.	253.8	255.5	mA
	P_{WD0-4}	The power consumption under the state without suspend. Device state = D0, The number of active ports is 4. Note2			
		Full- or low-speed device(s) is (are) on the port.	57.4	36.7	mA
		High-speed device(s) is (are) on the port.	301.6	300.1	mA
	P_{WD0-5}	The power consumption under the state without suspend. Device state = D0, The number of active ports is 5. Note2			
		Full- or low-speed device(s) is (are) on the port.	59.8	38.8	mA
		High-speed device(s) is (are) on the port.	349.1	345.2	mA
	P_{WD0_C}	The power consumption under suspend state during PCI clock is stopped by CRUN0. Device state = D0.	30.5	10.4	mA
	P_{WD1}	Device state = D1, Analog PLL output is stopped. Note 3	7.7	10.4	mA
	P_{WD2}	Device state = D2, Analog PLL output is stopped. Note 3	7.7	10.4	mA
	P_{WD3H}	Device state = $D3_{hot}$, VCCRST0 = High, Analog PLL output is stopped. Note 3	7.7	10.4	mA
	P_{WD3C}	Device state = $D3_{cold}$, VCCRST0 = Low. Note 4	0.03	3.81	mA

Notes 1. When any device is not connected to all the ports of HC, the power consumption for HC does not depend on the number of active ports.

2. The number of active ports is set by the value of Port No Field in PCI configuration space EXT register.

3. This is the case when PCI bus state is B0.

4. This is the case when PCI bus state is B3.

Remark These are estimated value on Windows™ XP environment.

System clock ratings

Parameter	Symbol	Condition	Min.	Typ.	Max.	Unit
Clock frequency	f_{CLK}	X'tal	–500 ppm	30	+500 ppm	MHz
		Oscillator block	–500 ppm	48	+500 ppm	MHz
Clock duty cycle	t_{DUTY}		40	50	60	%

Remarks 1. Recommended accuracy of clock frequency is ± 100 ppm.

2. Required accuracy of X'tal or oscillator block is including initial frequency accuracy, the spread of X'tal capacitor loading, supply voltage, temperature, and aging, etc.

AC Characteristics (V_{DD} = 3.0 to 3.6 V, T_A = 0 to +70°C)

PCI interface block

Parameter	Symbol	Condition	Min.	Max.	Unit
PCI clock cycle time	t_{cyc}		30		ns
PCI clock pulse, high-level width	t_{high}		11		ns
PCI clock pulse, low-level width	t_{low}		11		ns
PCI clock, rise slew rate	S_{cr}	0.2V_{DD} to 0.6V_{DD}	1	4	V/ns
PCI clock, fall slew rate	S_{cf}	0.2V_{DD} to 0.6V_{DD}	1	4	V/ns
PCI reset active time (vs. power supply stability)	t_{rst}		1		ms
PCI reset active time (vs. CLK start)	$t_{rst-clk}$		100		μs
Output float delay time (vs. RST0↓)	$t_{rst-off}$			40	ns
PCI reset rise slew rate	S_{rr}		50		mV/ns
PCI bus signal output time (vs. PCLK↑)	t_{val}		2	11	ns
PCI point-to-point signal output time (vs. PCLK↑)	t_{val} (ptp)	REQ0	2	12	ns
Output delay time (vs. PCLK↑)	t_{on}		2		ns
Output float delay time (vs. PCLK↑)	t_{off}			28	ns
Input setup time (vs. PCLK↑)	t_{su}		7		ns
Point-to-point input setup time (vs. PCLK↑)	t_{su} (ptp)	GNT0	10		ns
Input hold time	t_h		0		ns

USB interface block

(1/2)

Parameter	Symbol	Conditions	Min.	Max.	Unit
Low-speed Source Electrical Characteristics					
Rise time (10 to 90%)	t_{LR}	C_L = 200 to 600 pF, R_S = 36 Ω	75	300	ns
Fall time (90 to 10%)	t_{LF}	C_L = 200 to 600 pF, R_S = 36 Ω	75	300	ns
Differential rise and fall time matching	t_{LRFM}	(t_{LR}/t_{LF})	80	125	%
Low-speed data rate	$t_{LDRATHS}$	Average bit rate	1.49925	1.50075	Mbps
Source jitter total (including frequency tolerance): To next transition For paired transitions	 t_{DDJ1} t_{DDJ2}		 −25 −14	 +25 +14	 ns ns
Source jitter for differential transition to SE0 transition	t_{LDEOP}		−40	+100	ns
Receiver jitter: To next transition For paired transitions	 t_{UJR1} t_{UJR2}		 −152 −200	 +152 +200	 ns ns
Source SE0 interval of EOP	t_{LEOPT}		1.25	1.50	μs
Receiver SE0 interval of EOP	t_{LEOPR}		670		ns
Width of SE0 interval during differential transition	t_{FST}			210	ns
Full-speed Source Electrical Characteristics					
Rise time (10 to 90%)	t_{FR}	C_L = 50 pF, R_S = 36 Ω	4	20	ns
Fall time (90 to 10%)	t_{FF}	C_L = 50 pF, R_S = 36 Ω	4	20	ns
Differential rise and fall time matching	t_{FRFM}	(t_{FR}/t_{FF})	90	111.11	%
Full-speed data rate	$t_{FDRATHS}$	Average bit rate	11.9940	12.0060	Mbps
Frame interval	t_{FRAME}		0.9995	1.0005	ms
Consecutive frame interval jitter	t_{RFI}	No clock adjustment		42	ns
Source jitter total (including frequency tolerance): To next transition For paired transitions	 t_{DJ1} t_{DJ2}		 −3.5 −4.0	 +3.5 +4.0	 ns ns
Source jitter for differential transition to SE0 transition	t_{FDEOP}		−2	+5	ns
Receiver jitter: To next transition For paired transitions	 t_{JR1} t_{JR2}		 −18.5 −9	 +18.5 +9	 ns ns
Source SE0 interval of EOP	t_{FEOPT}		160	175	ns
Receiver SE0 interval of EOP	t_{FEOPR}		82		ns
Width of SE0 interval during differential transition	t_{FST}			14	ns

(2/2)

Parameter	Symbol	Conditions	Min.	Max.	Unit
High-speed Source Electrical Characteristics					
Rise time (10 to 90%)	t_{HSR}		500		ps
Fall time (90 to 10%)	t_{HSF}		500		ps
Driver waveform	See **Figure 3-6**.				
High-speed data rate	t_{HSDRAT}		479.760	480.240	Mbps
Microframe interval	t_{HSFRAM}		124.9375	125.0625	μs
Consecutive microframe interval difference	t_{HSRFI}			4 high-speed	Bit times
Data source jitter	See **Figure 3-6**.				
Receiver jitter tolerance	See **Figure 3-4**.				
Hub Event Timings					
Time to detect a downstream facing port connect event	t_{DCNN}		2.5	2000	μs
Time to detect a disconnect event at a hub's downstream facing port	t_{DDIS}		2.0	2.5	μs
Duration of driving resume to a downstream port	t_{DRSMDN}	Nominal	20		ms
Time from detecting downstream resume to rebroadcast	t_{URSM}			1.0	ms
Inter-packet delay for packets traveling in same direction for high-speed	$t_{HSIPDSD}$		88		Bit times
Inter-packet delay for packets traveling in opposite direction for high-speed	$t_{HSIPDOD}$		8		Bit times
Inter-packet delay for root hub response for high-speed	$t_{HSRSPIPD1}$			192	Bit times
Time for which a Chirp J or Chirp K must be continuously detected during reset handshake	t_{FILT}		2.5		μs
Time after end of device Chirp K by which hub must start driving first Chirp K	t_{WTDCH}			100	μs
Time for which each individual Chirp J or Chirp K in the chirp sequence is driven downstream during reset	t_{DCHBIT}		40	60	μs
Time before end of reset by which a hub must end its downstream chirp sequence	t_{DCHSE0}		100	500	μs

Figure 3-6. Transmit Waveform for Transceiver at DP/DM

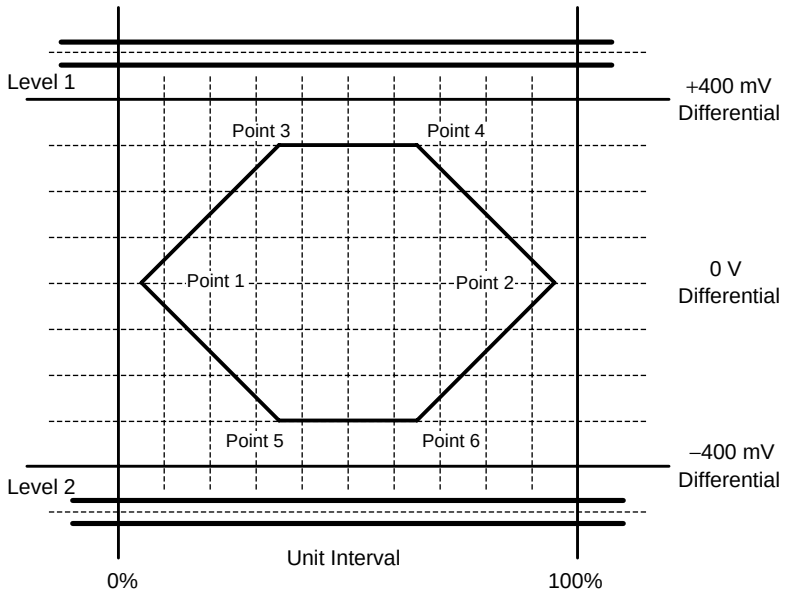

Figure 3-7. Transmitter Measurement Fixtures

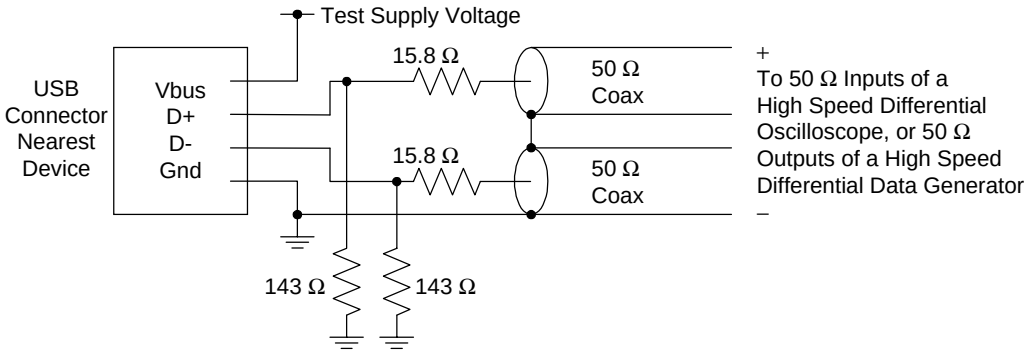

3.4 Timing Diagram

PCI clock

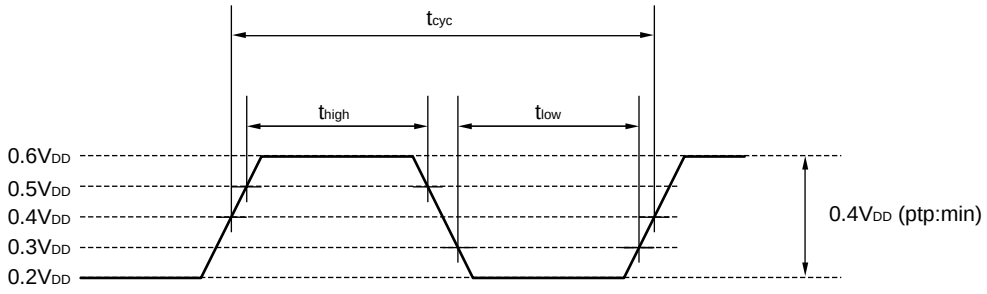

PCI reset

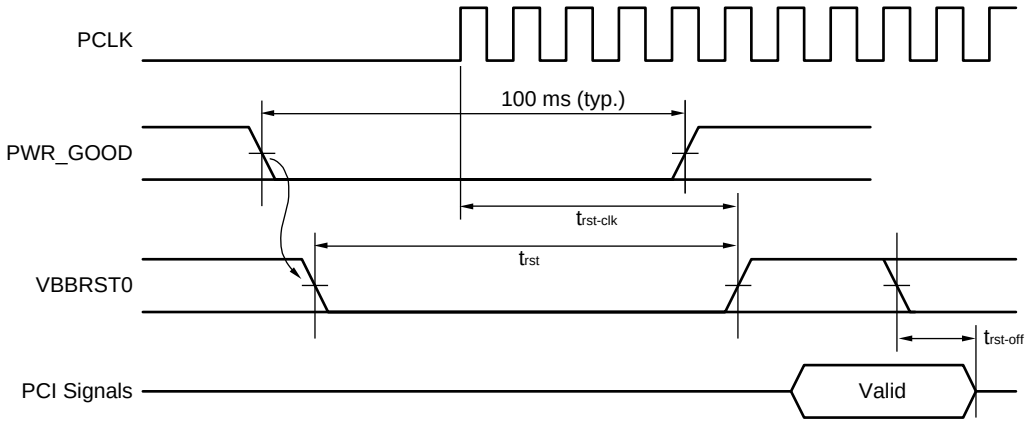

PCI output timing measurement condition

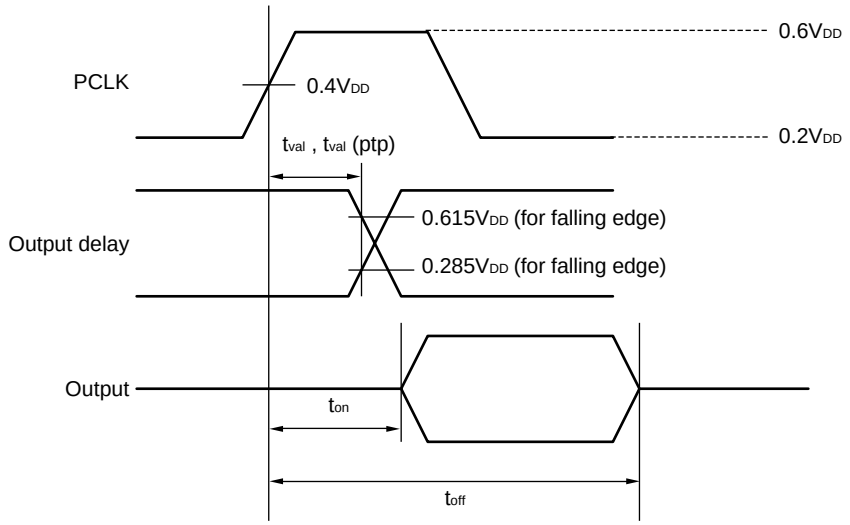

PCI input timing measurement condition

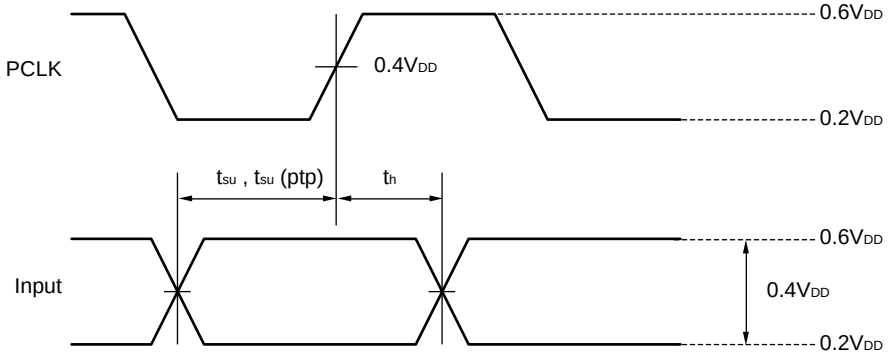

USB differential data jitter for full-speed

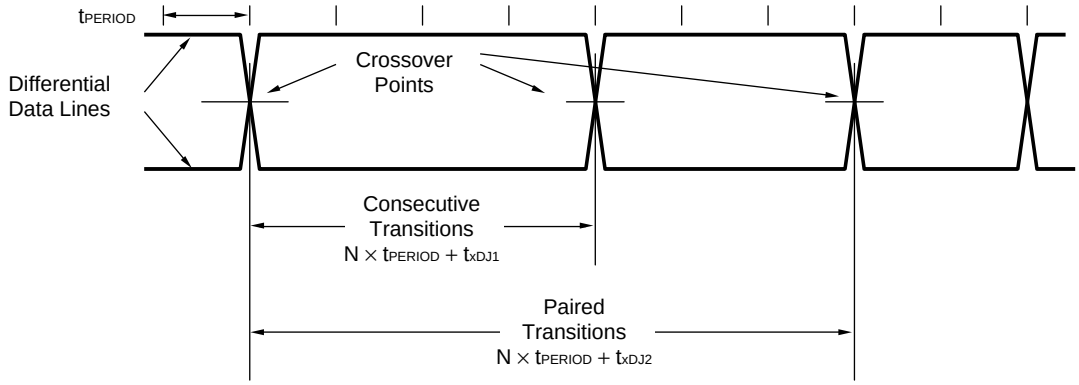

USB differential-to-EOP transition skew and EOP width for low-/full-speed

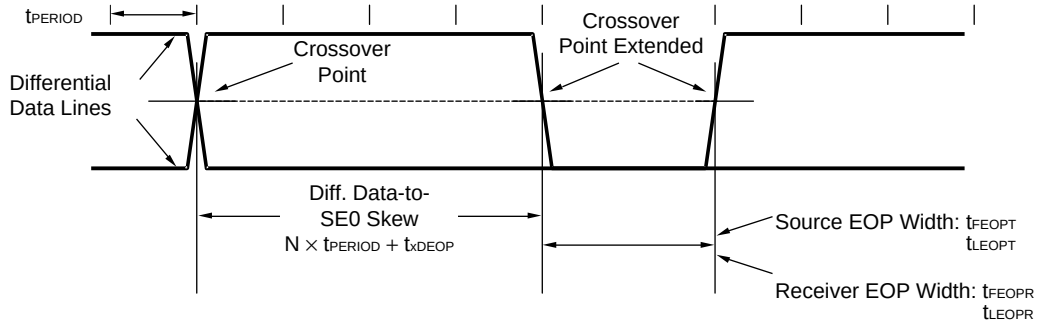

USB receiver jitter tolerance for low-/full-speed

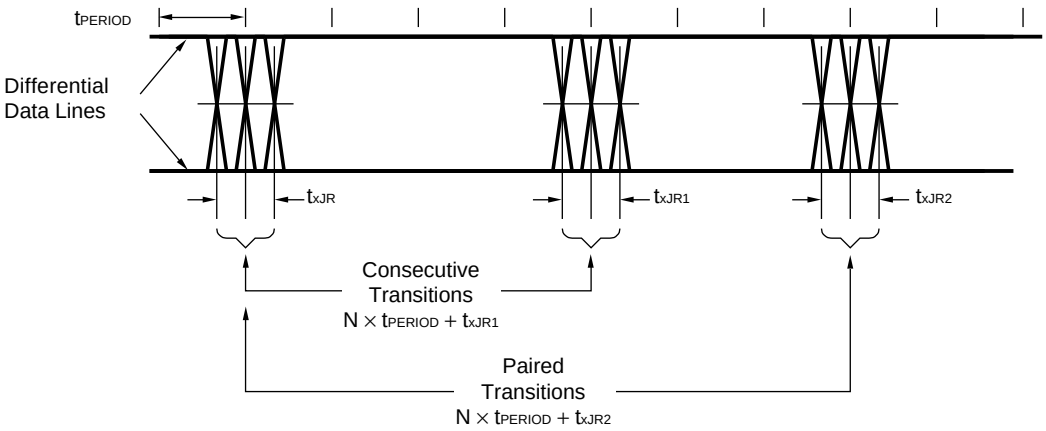

Low-/full-speed disconnect detection

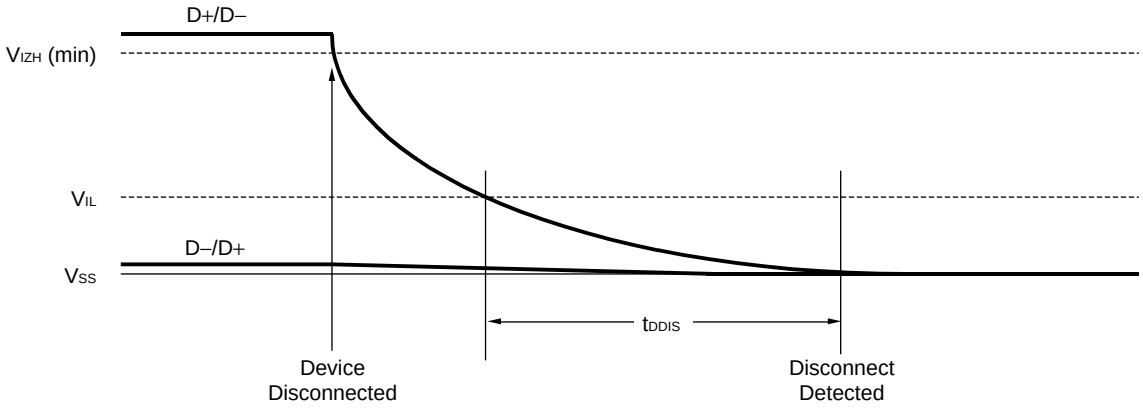

Full-/high-speed device connect detection

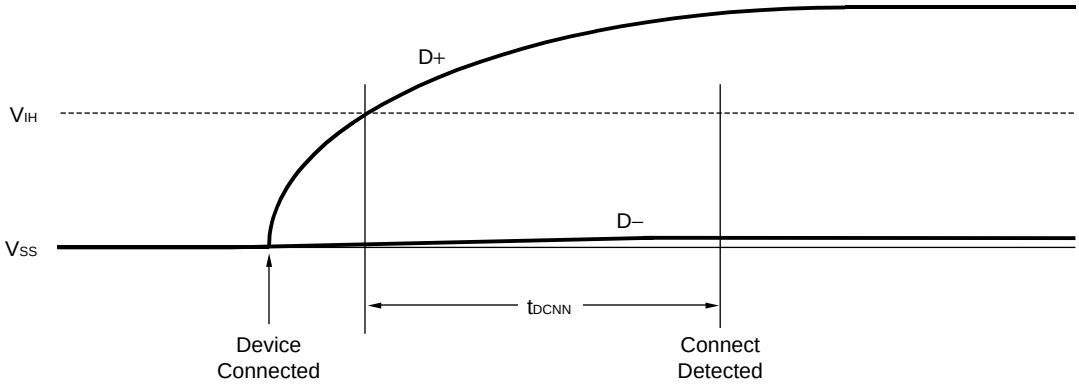

Low-speed device connect detection

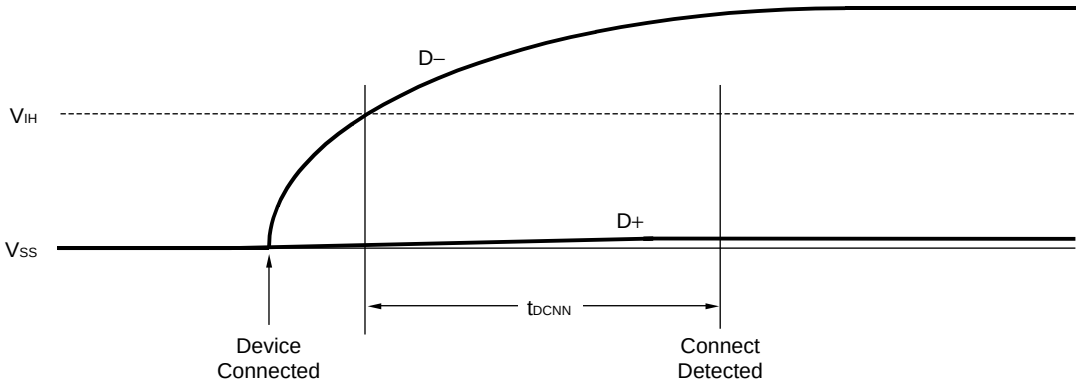

4. PACKAGE DRAWINGS

144-PIN PLASTIC LQFP (FINE PITCH) (20x20)

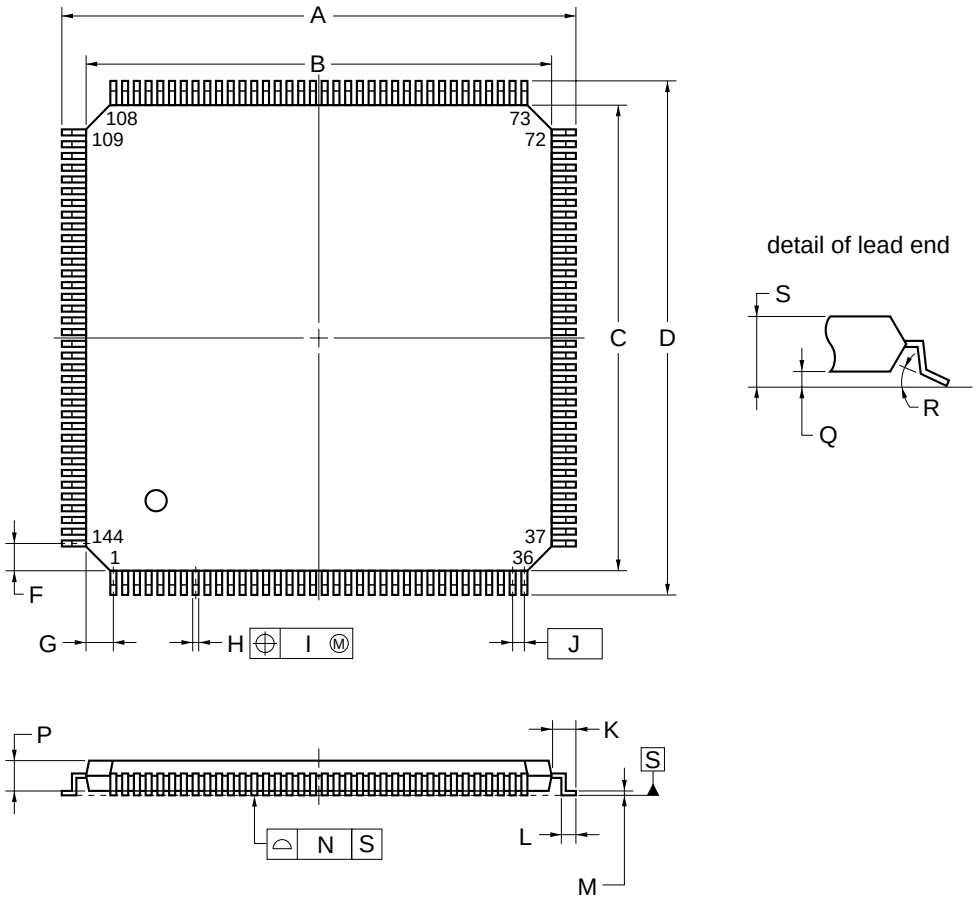

NOTE

Each lead centerline is located within 0.08 mm of its true position (T.P.) at maximum material condition.

ITEM	MILLIMETERS
A	22.0±0.2
B	20.0±0.2
C	20.0±0.2
D	22.0±0.2
F	1.25
G	1.25
H	0.22±0.05
I	0.08
J	0.5 (T.P.)
K	1.0±0.2
L	0.5±0.2
M	$0.17^{+0.03}_{-0.07}$
N	0.08
P	1.4
Q	0.10±0.05
R	$3^{\circ}{}^{+4^{\circ}}_{-3^{\circ}}$
S	1.5±0.1

S144GJ-50-UEN

144-PIN PLASTIC FBGA (12x12)

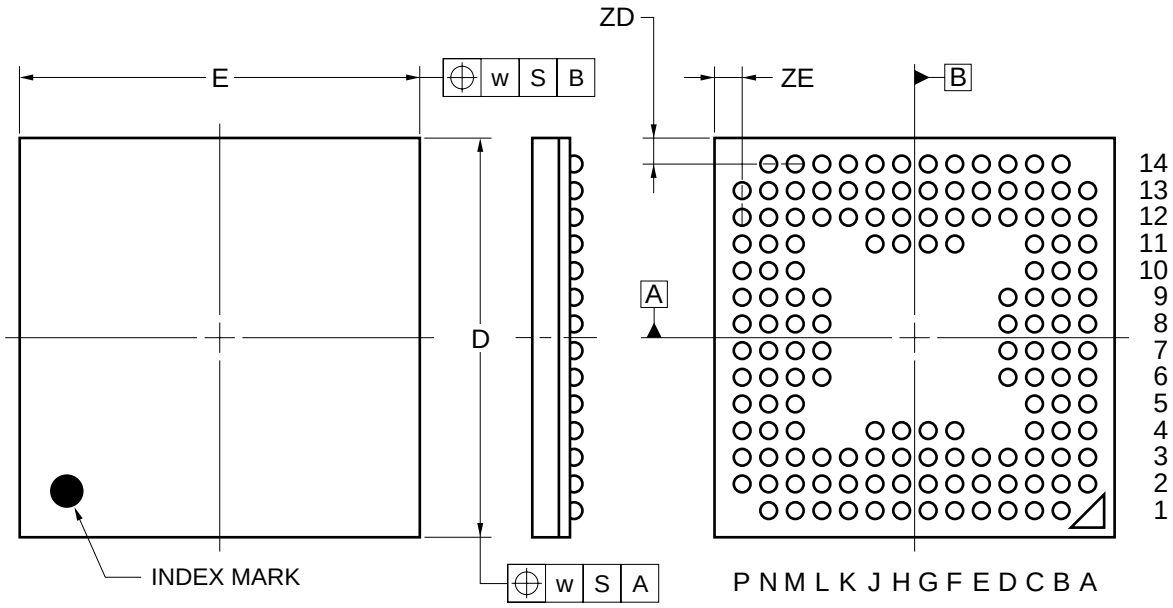

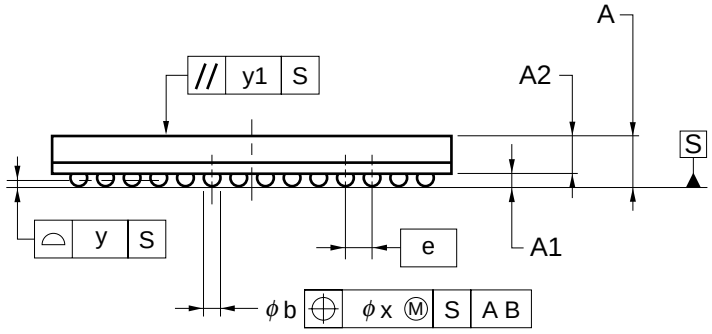

ITEM	MILLIMETERS
D	12.00±0.10
E	12.00±0.10
w	0.20
A	1.48±0.10
A1	0.35±0.06
A2	1.13
e	0.80
b	$0.50^{+0.05}_{-0.10}$
x	0.08
y	0.10
y1	0.20
ZD	0.80
ZE	0.80

P144F1-80-EA8

5. RECOMMENDED SOLDERING CONDITIONS

The μPD720101 should be soldered and mounted under the following recommended conditions.

For soldering methods and conditions other than those recommended below, contact an NEC Electronics sales representative.

For technical information, see the following website.

Semiconductor Device Mount Manual (http://www.necel.com/pkg/en/mount/index.html)

μPD720101GJ-UEN: 144-pin plastic LQFP (Fine pitch) (20 × 20)

Soldering Method	Soldering Conditions	Symbol
Infrared reflow	Package peak temperature: 235°C, Time: 30 seconds max. (at 210°C or higher), Count: Three times or less Exposure limit: 3 days[Note] (after that, prebake at 125°C for 10 hours)	IR35-103-3
Partial heating	Pin temperature: 300°C max., Time: 3 seconds max. (per pin row)	–

Note After opening the dry pack, store it at 25°C or less and 65% RH or less for the allowable storage period.

μPD720101F1-EA8: 144-pin plastic FBGA (12 × 12)

Soldering Method	Soldering Conditions	Symbol
Infrared reflow	Package peak temperature: 235°C, Time: 30 seconds max. (at 210°C or higher), Count: Three times or less Exposure limit: 7 days[Note] (after that, prebake at 125°C for 10 hours)	IR35-107-3

Note After opening the dry pack, store it at 25°C or less and 65% RH or less for the allowable storage period.

[MEMO]

[MEMO]

NOTES FOR CMOS DEVICES

① VOLTAGE APPLICATION WAVEFORM AT INPUT PIN

Waveform distortion due to input noise or a reflected wave may cause malfunction. If the input of the CMOS device stays in the area between V_{IL} (MAX) and V_{IH} (MIN) due to noise, etc., the device may malfunction. Take care to prevent chattering noise from entering the device when the input level is fixed, and also in the transition period when the input level passes through the area between V_{IL} (MAX) and V_{IH} (MIN).

② HANDLING OF UNUSED INPUT PINS

Unconnected CMOS device inputs can be cause of malfunction. If an input pin is unconnected, it is possible that an internal input level may be generated due to noise, etc., causing malfunction. CMOS devices behave differently than Bipolar or NMOS devices. Input levels of CMOS devices must be fixed high or low by using pull-up or pull-down circuitry. Each unused pin should be connected to V_{DD} or GND via a resistor if there is a possibility that it will be an output pin. All handling related to unused pins must be judged separately for each device and according to related specifications governing the device.

③ PRECAUTION AGAINST ESD

A strong electric field, when exposed to a MOS device, can cause destruction of the gate oxide and ultimately degrade the device operation. Steps must be taken to stop generation of static electricity as much as possible, and quickly dissipate it when it has occurred. Environmental control must be adequate. When it is dry, a humidifier should be used. It is recommended to avoid using insulators that easily build up static electricity. Semiconductor devices must be stored and transported in an anti-static container, static shielding bag or conductive material. All test and measurement tools including work benches and floors should be grounded. The operator should be grounded using a wrist strap. Semiconductor devices must not be touched with bare hands. Similar precautions need to be taken for PW boards with mounted semiconductor devices.

④ STATUS BEFORE INITIALIZATION

Power-on does not necessarily define the initial status of a MOS device. Immediately after the power source is turned ON, devices with reset functions have not yet been initialized. Hence, power-on does not guarantee output pin levels, I/O settings or contents of registers. A device is not initialized until the reset signal is received. A reset operation must be executed immediately after power-on for devices with reset functions.

Purchase of NEC Electronics I^2C components conveys a license under the Philips I^2C Patent Rights to use these components in an I^2C system, provided that the system conforms to the I^2C Standard Specification as defined by Philips.

USB logo is a trademark of USB Implementers Forum, Inc.

Windows is either a registered trademark or a trademark of Microsoft Corporation in the United States and/or other countries.

- **The information in this document is current as of June, 2004. The information is subject to change without notice. For actual design-in, refer to the latest publications of NEC Electronics data sheets or data books, etc., for the most up-to-date specifications of NEC Electronics products. Not all products and/or types are available in every country. Please check with an NEC Electronics sales representative for availability and additional information.**
- No part of this document may be copied or reproduced in any form or by any means without the prior written consent of NEC Electronics. NEC Electronics assumes no responsibility for any errors that may appear in this document.
- NEC Electronics does not assume any liability for infringement of patents, copyrights or other intellectual property rights of third parties by or arising from the use of NEC Electronics products listed in this document or any other liability arising from the use of such products. No license, express, implied or otherwise, is granted under any patents, copyrights or other intellectual property rights of NEC Electronics or others.
- Descriptions of circuits, software and other related information in this document are provided for illustrative purposes in semiconductor product operation and application examples. The incorporation of these circuits, software and information in the design of a customer's equipment shall be done under the full responsibility of the customer. NEC Electronics assumes no responsibility for any losses incurred by customers or third parties arising from the use of these circuits, software and information.
- While NEC Electronics endeavors to enhance the quality, reliability and safety of NEC Electronics products, customers agree and acknowledge that the possibility of defects thereof cannot be eliminated entirely. To minimize risks of damage to property or injury (including death) to persons arising from defects in NEC Electronics products, customers must incorporate sufficient safety measures in their design, such as redundancy, fire-containment and anti-failure features.
- NEC Electronics products are classified into the following three quality grades: "Standard", "Special" and "Specific".

  The "Specific" quality grade applies only to NEC Electronics products developed based on a customer-designated "quality assurance program" for a specific application. The recommended applications of an NEC Electronics product depend on its quality grade, as indicated below. Customers must check the quality grade of each NEC Electronics product before using it in a particular application.

  "Standard": Computers, office equipment, communications equipment, test and measurement equipment, audio and visual equipment, home electronic appliances, machine tools, personal electronic equipment and industrial robots.

  "Special": Transportation equipment (automobiles, trains, ships, etc.), traffic control systems, anti-disaster systems, anti-crime systems, safety equipment and medical equipment (not specifically designed for life support).

  "Specific": Aircraft, aerospace equipment, submersible repeaters, nuclear reactor control systems, life support systems and medical equipment for life support, etc.

The quality grade of NEC Electronics products is "Standard" unless otherwise expressly specified in NEC Electronics data sheets or data books, etc. If customers wish to use NEC Electronics products in applications not intended by NEC Electronics, they must contact an NEC Electronics sales representative in advance to determine NEC Electronics' willingness to support a given application.

(Note)

(1) "NEC Electronics" as used in this statement means NEC Electronics Corporation and also includes its majority-owned subsidiaries.

(2) "NEC Electronics products" means any product developed or manufactured by or for NEC Electronics (as defined above).