NEC

MOS INTEGRATED CIRCUIT

μPD16334

96-Bit AC-PDP DRIVER

The μPD16334 is a high-voltage CMOS driver designed for flat display panels such as PDPs, VFDs and ELs. It consists of a 96-bit bi-directional shift register, 96-bit latch and high-voltage CMOS driver. The logic block is designed to operate using a 5-V power supply/3.3-V interface enabling direct connection to a gate array or a microcontroller. In addition, the μPD16334 achieves low power dissipation by employing the CMOS structure while having a high withstand voltage output (80 V, 50 mA).

FEATURES

- Selectable by IBS pin; three 32-bit bi-directional shift register circuits configuration or six 16-bit bi-directional shift register circuits configuration
- Data control with transfer clock (external) and latch
- High-speed data transfer ($f_{max.}$ = 25 MHz min. at data fetch)
  ($f_{max.}$ = 15 MHz min. at cascade connection)
- High withstand output voltage (80 V, 50 $mA_{MAX.}$)
- 3.3 V CMOS input interface
- High withstand voltage CMOS structure
- Capable of reversing all driver outputs by $\overline{PC}$ pin

ORDERING INFORMATION

Part Number	Package
μPD16334	COB*

* Please consult with an NEC sales representative about COB.

Document No. S12362EJ2V0DS00 (2nd edition)
Date Published May 1998 N CP(K)
Printed in Japan

© NEC Corporation 1997

BLOCK DIAGRAM (IBS = H, 3-BIT INPUT, 32-BIT LENGTH SHIFT REGISTER)

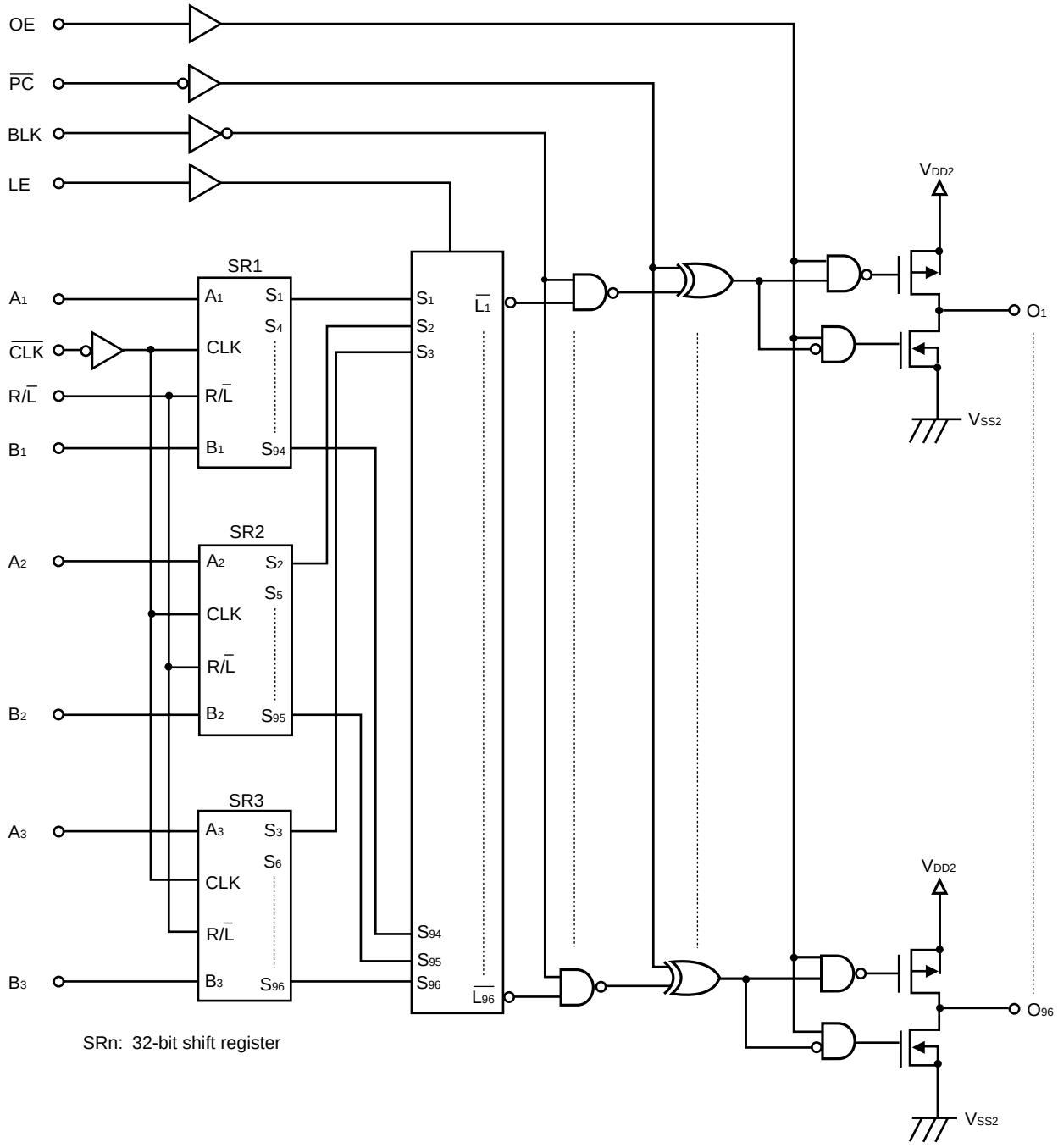

SRn: 32-bit shift register

BLOCK DIAGRAM (IBS = L, 6-BIT INPUT, 16-BIT LENGTH SHIFT REGISTER)

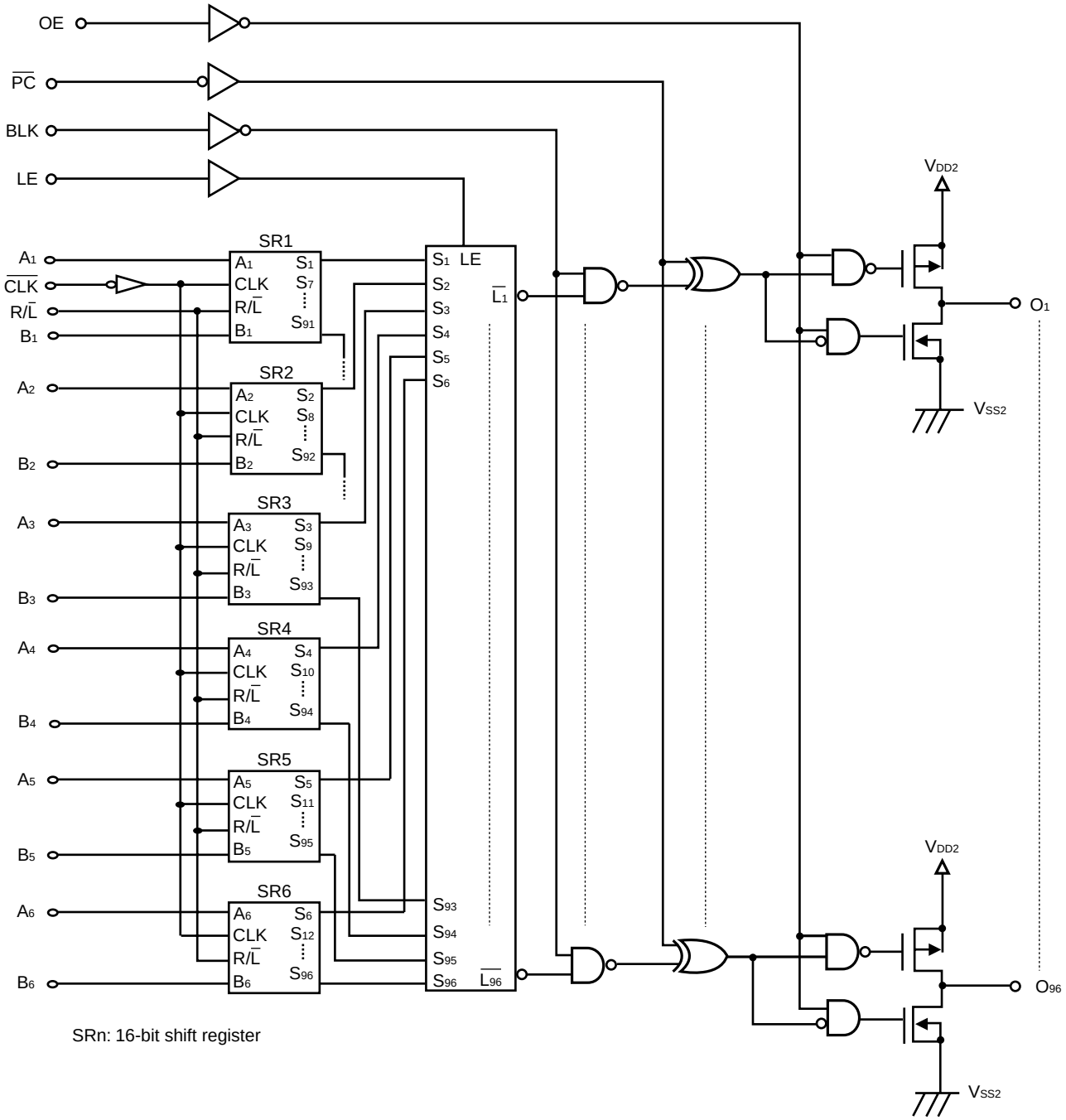

SRn: 16-bit shift register

PIN DESCRIPTION

Symbol	Pin Name	Description
$\overline{PC}$	Polarity change input	$\overline{PC}$ = L: All driver output invert
BLK	Blank input	BLK = H : All output = H or L
LE	Latch enable input	Automatically executes latch by setting high at rising edge of the clock
OE	Output enable	Make output high impedance by input H
A_1 to $A_{3\,(6)}$	RIGHT data input/output (Note)	When R/$\overline{L}$=H (values in parentheses are for 6-bit input) A_1 to $A_{3\,(6)}$: Input B_1 to $B_{3\,(6)}$: Output
B_1 to $B_{3\,(6)}$	LEFT data input/output (Note)	When R/$\overline{L}$=L (values in parentheses are for 6-bit input) A_1 to $A_{3\,(6)}$: Output B_1 to $B_{3\,(6)}$: Input
$\overline{CLK}$	Clock input	Shift executed on fall
R/$\overline{L}$	Shift control input	Right shift mode when R/$\overline{L}$= H SR_1 : A1 → S_1...S_{94} → B1 (Same direction for SR_2 to SR_6) Left shift mode when R/$\overline{L}$= L SR_1 : B_1 → S_{94}...S_1 → A_1 (Same direction for SR_2 to SR_6)
IBS	Input mode switch	H: 32-bit length shift register, 3-bit input L: 16-bit length shift register, 6-bit input
O_1 to O_{96}	High withstand voltage output	80 V, 50 $mA_{MAX.}$
V_{DD1}	Power supply for logic block	5 V ± 10 %
V_{DD2}	Power supply for driver block	10 to 70 V
V_{SS1}	Logic GND	Connect to system GND
V_{SS2}	Driver GND	Connect to system GND

Note When input mode is 3-bit, set unused input and output pins "L" level.

TRUTH TABLE 1 (Shift Register Block)

Input		Output		Shift Register
R/$\overline{L}$	$\overline{CLK}$	A	B	
H	↓	Input	Output Note1	Right shift execution
H	H or L		Output	Hold
L	↓	Output Note2	Input	Left shift execution
L	H or L	Output		Hold

Notes 1. The data of S_{91} to S_{93} (S_{85} to S_{90}) shifts to S_{94} to S_{96} (S_{91} to S_{96}) and is output from B_1 to B_3 (B_1 to B_6) at the falling edge of the clock, respectively. (Values in parentheses are for 6-bit input)

2. The data of S_4 to S_6 (S_7 to S_{12}) shifts to S_1 to S_3 (S_1 to S_6) and is output from A_1 to A_3 (A_1 to A_6) at the falling edge of the clock, respectively (Values in parentheses are for 6-bit input)

TRUTH TABLE 2 (Latch Block)

LE	$\overline{CLK}$	Output State of Latch Block ($\overline{L_n}$)
H	↑	Latch Sn data and hold output data
	↓	Hold latch data
L	X	Hold latch data

TRUTH TABLE 3 (Driver Block)

$\overline{L_n}$	BLK	$\overline{PC}$	OE	Output State of Driver Block
X	H	H	L	H (All driver outputs: H)
X	H	L	L	L (All driver outputs: L)
X	L	H	L	Output latch data ($\overline{L_n}$)
X	L	L	L	Output inverted latch data ($\overline{L_n}$)
X	X	X	H	Set output impedance high

X: H or L, H: High level, L: Low level

TIMING CHART (WHEN IBS="H": 3-BIT INPUT, RIGHT SHIFT)

Values in parentheses in the following chart are when R/$\overline{L}$=L.

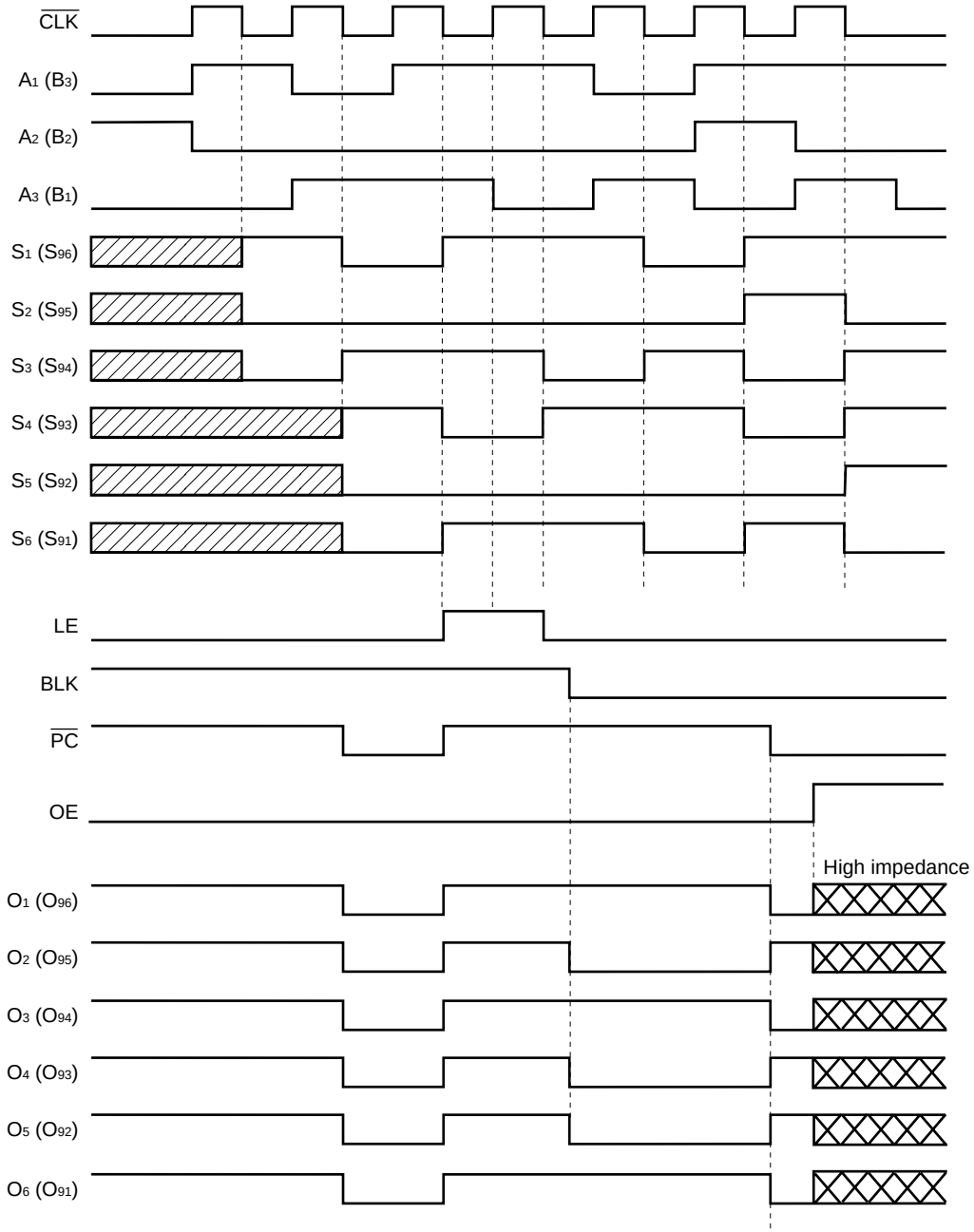

TIMING CHART (WHEN IBS="L": 6-BIT INPUT, RIGHT SHIFT)

Values in parentheses in the following chart are when R/$\overline{L}$=L.

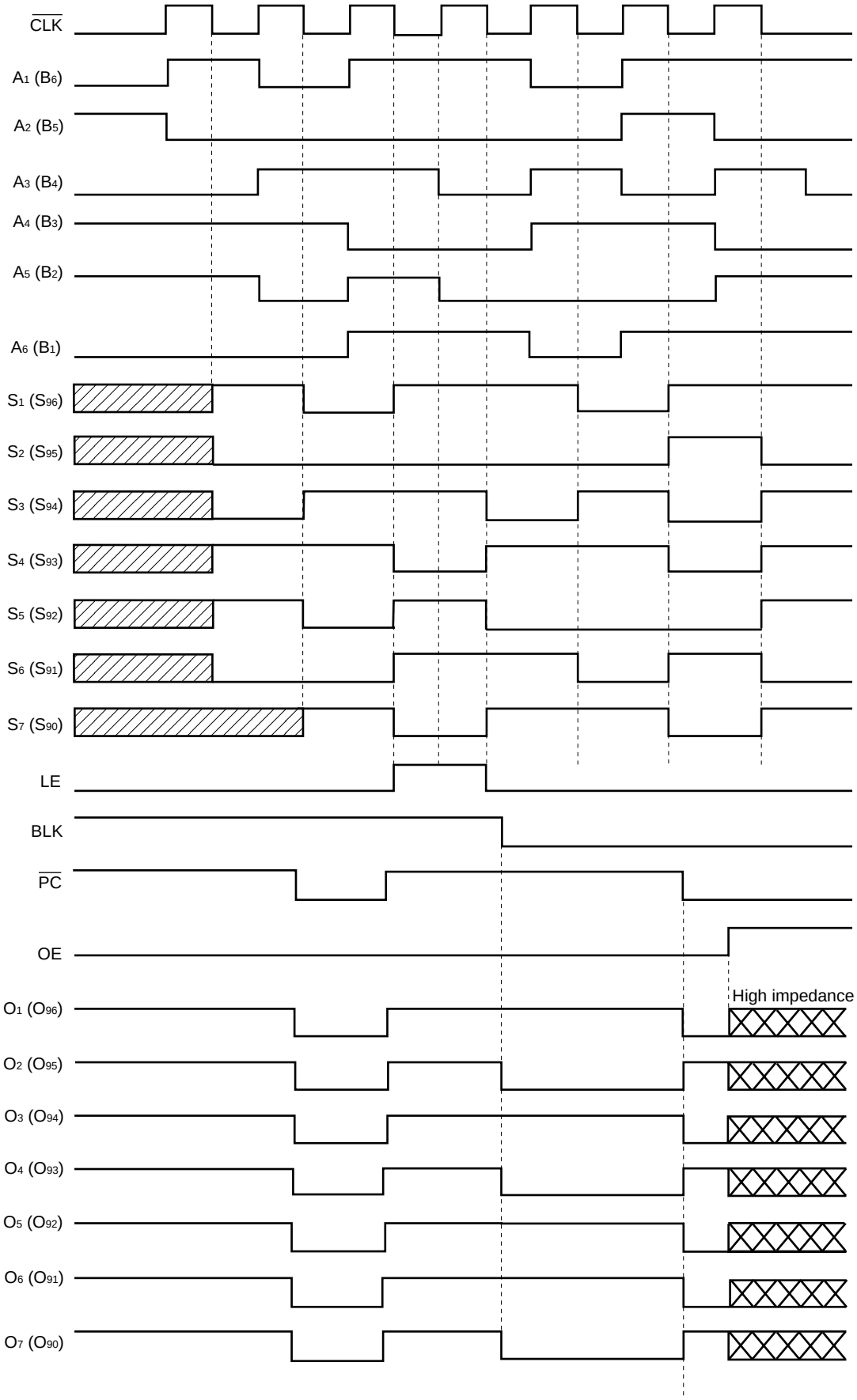

ABSOLUTE MAXIMUM RATINGS (T_A = 25 °C, V_{SS1} = V_{SS2} = 0 V)

Parameter	Symbol	Ratings	Unit
Logic Block Supply Voltage	V_{DD1}	–0.5 to +7.0	V
Driver Block Supply Voltage	V_{DD2}	–0.5 to +80	V
Logic Block Input Voltage	VI	–0.5 to V_{DD1} + 0.5	V
Driver Block Output Current	I_{O2}	50	mA
Junction Temperature	T_j	+125	°C
Storage Temperature	$T_{stg.}$	–65 to +150	°C

RECOMMENDED OPERATING CONDITIONS (T_A = –40 to +85 °C, V_{SS1} = V_{SS2} = 0 V)

Parameter	Symbol	MIN.	TYP.	MAX.	Unit
Logic Block Supply Voltage	V_{DD1}	4.75	5.0	5.25	V
Driver Block Supply Voltage	V_{DD2}	10		70	V
High-Level Input Voltage	V_{IH}	2.7		V_{DD1}	V
Low-Level Input Voltage	V_{IL}	0		0.6	V
Driver Output Current	I_{OH2}			–40	mA
	I_{OL2}			+40	mA

Caution In order to prevent latch-up breakage, be sure to enter the power to V_{DD1}, logic signal and V_{DD2} in that order, and turn off the power in the reverse order, keep this order also during a transition period.

ELECTRICAL SPECIFICATIONS (T_A = 25 °C, V_{DD1} = 5.0 V, V_{DD2} = 70 V, V_{SS1} = V_{SS2} = 0 V)

Parameter	Symbol	Conditions	MIN.	TYP.	MAX.	Unit
High-Level Output Voltage	V_{OH1}	Logic, I_{OH1} = –1.0 mA	0.9 • V_{DD1}		V_{DD1}	V
Low-Level Output Voltage	V_{OL1}	Logic, I_{OL1} = 1.0 mA	0		0.1 V_{DD1}	V
High-Level Output Voltage	V_{OH21}	O_1 to O_{96}, I_{OH2} = –1 mA	69			V
	V_{OH22}	O_1 to O_{96}, I_{OH2} = –10 mA	65			V
Low-Level Output Voltage	V_{OL21}	O_1 to O_{96}, I_{OL2} = 5 mA			1.0	V
	V_{OL22}	O_1 to O_{96}, I_{OL2} = 40 mA			10	V
Input Leakage Current	I_{IL}	V_I = V_{DD1} or V_{SS1}			±1.0	μA
High-Level Input Voltage	V_{IH}	V_{DD1} = 4.75 to 5.25 V	2.7			V
Low-Level Input Voltage	V_{IL}	V_{DD1} = 4.75 to 5.25 V			0.6	V
Static Current Dissipation	I_{DD1}	Logic, T_A = –40 to +85 °C			10 Note	mA
	I_{DD1}	Logic, T_A = 25 °C			10 Note	mA
	I_{DD2}	Driver, T_A = –40 to +85 °C			1000	μA
	I_{DD2}	Driver, T_A = 25 °C			100	μA

Note When all inputs are high-level (V_{IH} = 2.7 V to V_{DD1}, the R/$\overline{L}$ and IBS pins are fixed to V_I = V_{SS1} or V_{DD1})

SWITCHING CHARACTERISTICS (T_A = 25 °C, V_{DD1} = 5 V, V_{DD2} = 70 V, V_{SS1} = V_{SS2} = 0 V, Logic C_L = 15 pF, Driver C_L = 50 pF, t_r = t_f = 6.0 ns)

Parameter	Symbol	Conditions	MIN.	TYP.	MAX.	Unit
Transmission	t_{PHL1}	$\overline{CLK}\downarrow \rightarrow$ A/B			55	ns
Delay time	t_{PLH1}				55	ns
	t_{PHL2}	$\overline{CLK}\uparrow$ (LE = H) $\rightarrow$ O_1 to O_{96}			180	ns
	t_{PLH2}				180	ns
	t_{PHL3}	BLK $\rightarrow$ O_1 to O_{96}			165	ns
	t_{PLH3}				165	ns
	t_{PHL4}	$\overline{PC}$ $\rightarrow$ O_1 to O_{96}			160	ns
	t_{PLH4}				160	ns
	t_{PHZ}	OE $\rightarrow$ O_1 to O_{96}			300	ns
	t_{PZH}	RL = 10 kΩ			180	ns
	t_{PLZ}				300	ns
	t_{PZL}				180	ns
Rise Time	t_{TLH}	O_1 to O_{96}			150	ns
	t_{TLZ}	RL = 10 kΩ			3	μs
	t_{TZH}	O_1 to O_{96}			150	ns
Fall Time	t_{THL}	O_1 to O_{96}			150	ns
	t_{THZ}	RL = 10 kΩ			3	μs
	t_{TZL}	O_1 to O_{96}			150	ns
Maximum Clock	$f_{max.}$	When data is read, duty 50 %	25			MHz
Frequency		cascade connection, Duty 50 %	15			MHz
Input Capacitance	C_I				15	pF

TIMING REQUIREMENT (T_A = –40 to +85 °C, V_{DD1} = 4. 75 to 5. 25 V, $V_{SS1,2}$ = 0 V, t_r = t_f = 6.0 ns)

Parameter	Symbol	Conditions	MIN.	TYP.	MAX.	Unit
Clock Pulse Width	$PW_{\overline{CLK}}$		20			ns
Latch Enable Pulse Width	PW_{LE}		30			ns
Blank Pulse Width	PW_{BLK}		200			ns
$\overline{PC}$ Pulse Width	$PW_{\overline{PC}}$		200			ns
OE Pulse Width	PW_{OE}	RL = 10 kΩ	3.3			μs
Data Setup Time	t_{setup}		10			ns
Data Hold Time	t_{hold}		10			ns
Latch Enable Time 1	t_{LE1}		25			ns
Latch Enable Time 2	t_{LE2}		5			ns
Latch Enable Time 3	t_{LE3}		25			ns
Latch Enable Time 4	t_{LE4}		5			ns

SWITCHING CHARACTERISTICS WAVEFORM

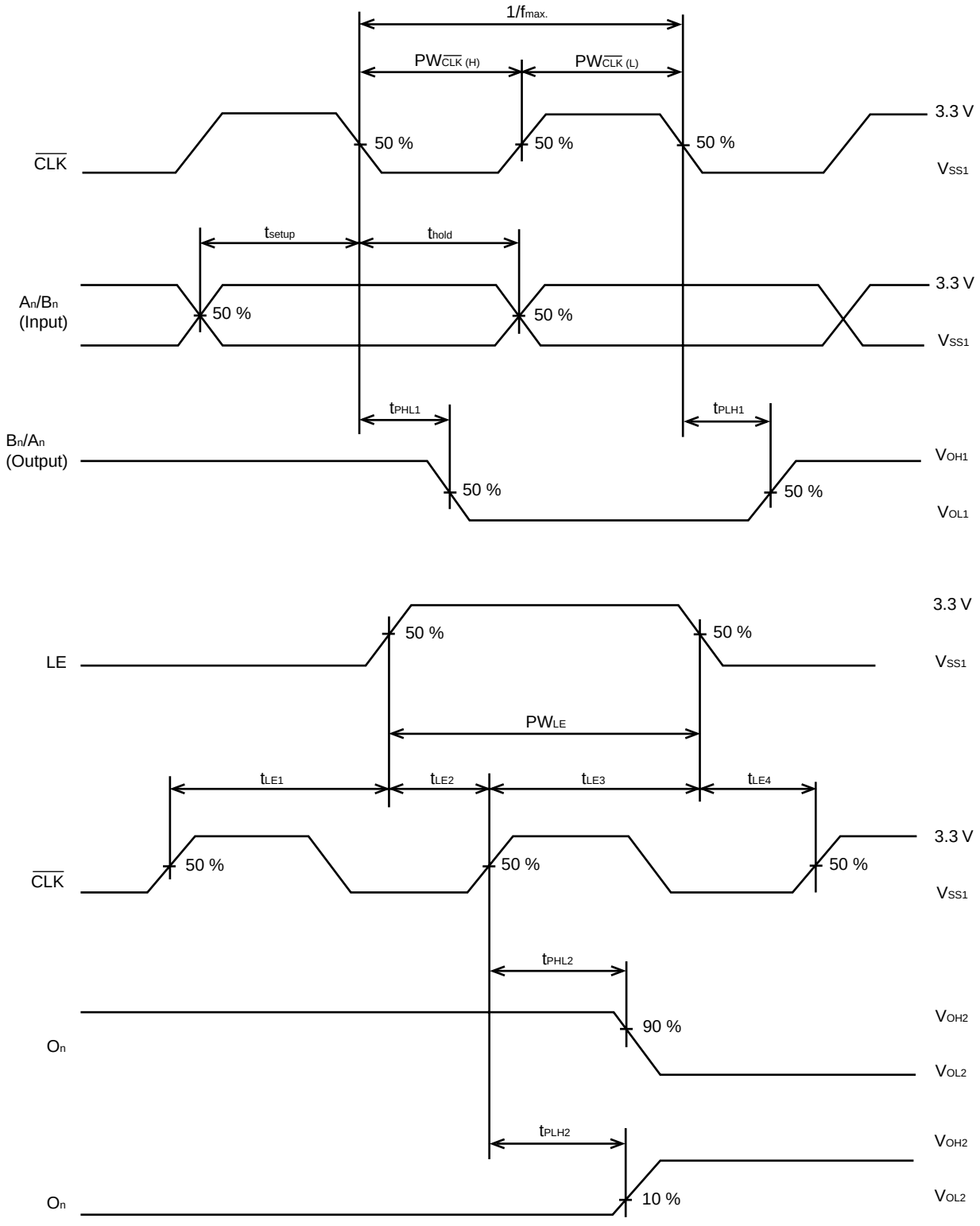

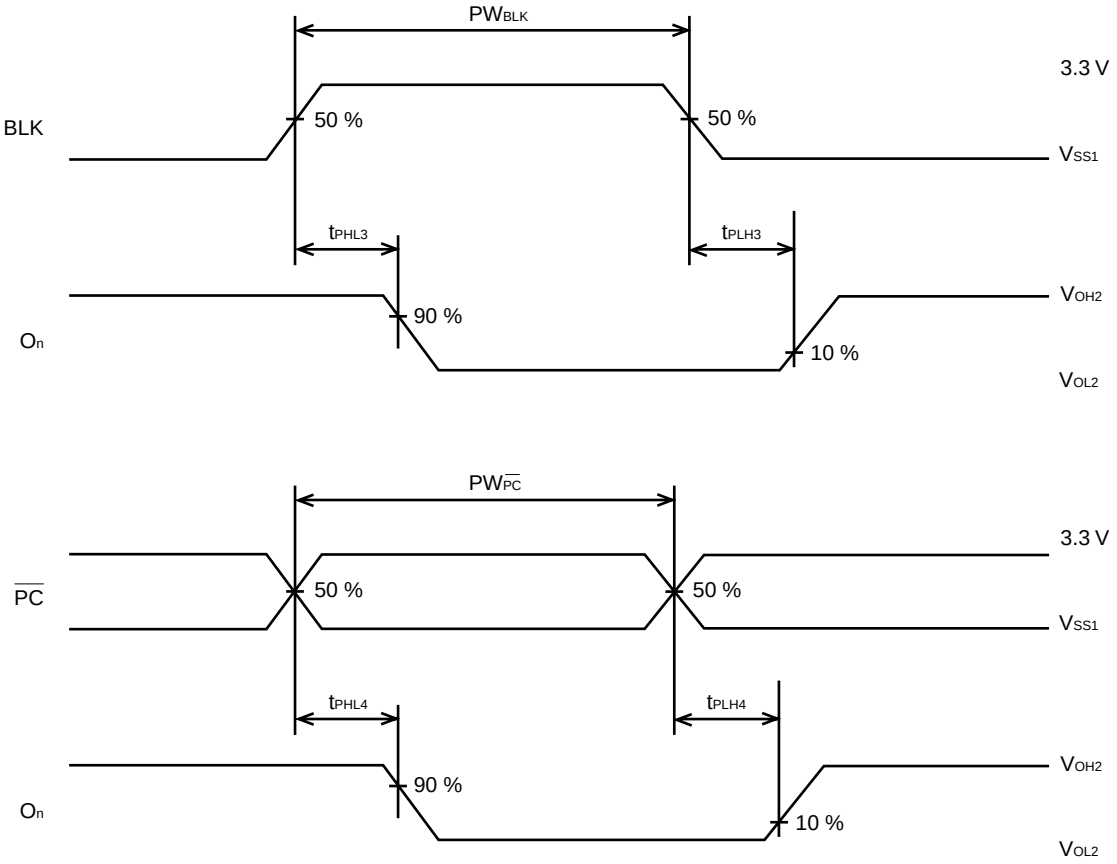
PWBLK
3.3 V
BLK
50 %
50 %
VSS1
tPHL3
tPLH3
VOH2
On
90 %
10 %
VOL2
PWPC
3.3 V
PC
50 %
50 %
VSS1
tPHL4
tPLH4
VOH2
On
90 %
10 %
VOL2

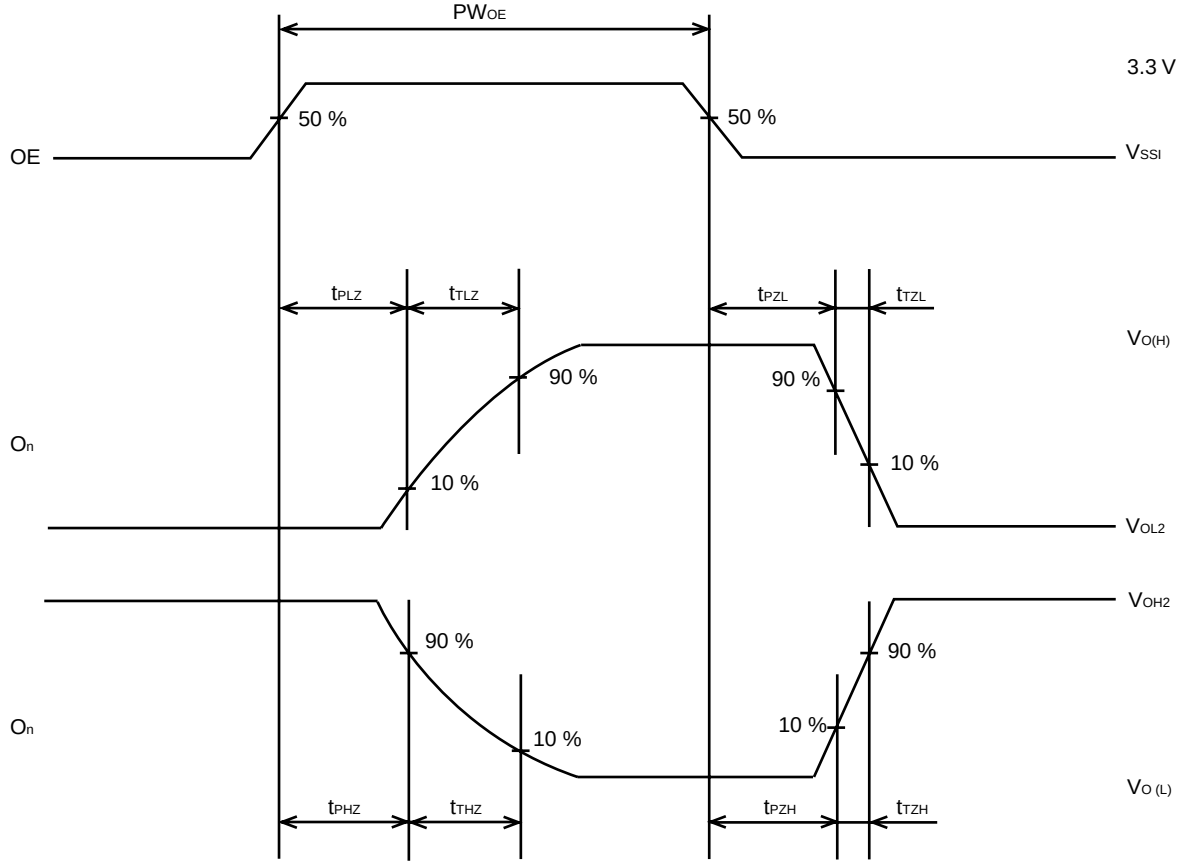
PWOE
3.3 V
OE
50 %
50 %
VSSI
tPLZ
tTLZ
tPZL
tTZL
VO(H)
On
90 %
90 %
10 %
10 %
VOL2
VOH2
90 %
90 %
On
10 %
10 %
VO (L)
tPHZ
tTHZ
tPZH
tTZH

[MEMO]

No part of this document may be copied or reproduced in any form or by any means without the prior written consent of NEC Corporation. NEC Corporation assumes no responsibility for any errors which may appear in this document.

NEC Corporation does not assume any liability for infringement of patents, copyrights or other intellectual property rights of third parties by or arising from use of a device described herein or any other liability arising from use of such device. No license, either express, implied or otherwise, is granted under any patents, copyrights or other intellectual property rights of NEC Corporation or others.

While NEC Corporation has been making continuous effort to enhance the reliability of its semiconductor devices, the possibility of defects cannot be eliminated entirely. To minimize risks of damage or injury to persons or property arising from a defect in an NEC semiconductor device, customers must incorporate sufficient safety measures in its design, such as redundancy, fire-containment, and anti-failure features.

NEC devices are classified into the following three quality grades:

"Standard", "Special", and "Specific". The Specific quality grade applies only to devices developed based on a customer designated "quality assurance program" for a specific application. The recommended applications of a device depend on its quality grade, as indicated below. Customers must check the quality grade of each device before using it in a particular application.

Standard: Computers, office equipment, communications equipment, test and measurement equipment, audio and visual equipment, home electronic appliances, machine tools, personal electronic equipment and industrial robots

Special: Transportation equipment (automobiles, trains, ships, etc.), traffic control systems, anti-disaster systems, anti-crime systems, safety equipment and medical equipment (not specifically designed for life support)

Specific: Aircrafts, aerospace equipment, submersible repeaters, nuclear reactor control systems, life support systems or medical equipment for life support, etc.

The quality grade of NEC devices is "Standard" unless otherwise specified in NEC's Data Sheets or Data Books. If customers intend to use NEC devices for applications other than those specified for Standard quality grade, they should contact an NEC sales representative in advance.

Anti-radioactive design is not implemented in this product.

M4 96.5