NEC
NEC Electronics Inc.

μPC1042
SWITCHING REGULATOR CONTROL CIRCUIT

Description

The μPC1042 is a switching regulator control circuit designed for use in Switch Mode Power Supplies (SMPS). The μPC1042 uses the Pulse Width Modulator Technique (PWM) and features on chip voltage reference, dual error amplifiers, oscillator, pulse width modulator comparator, pulse steering flip flop, dual phase output drivers, and deadtime adjustment. The μPC1042 is ideal for forward and push-pull converters with minimum external circuitry.

Features

- ☐ Internal oscillator has symmetrical triangular waveform
- ☐ Adjustable dead time (0 to 100%)
- ☐ Includes a misoperation-preventing circuit at low input voltage
- ☐ No double pulsing of outputs
- ☐ Error amplifier II can operate with 0 V input voltage level

Pin Configuration

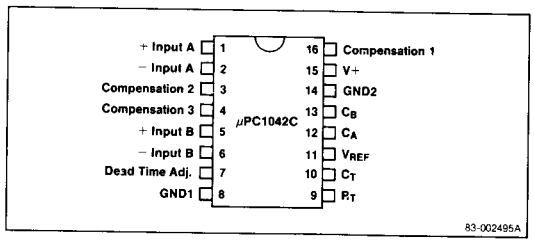

Ordering Information

Part Number	Package	Operating Temperature Range
μPC1042C	Plastic DIP	−20°C to +85°C

Equivalent Circuit

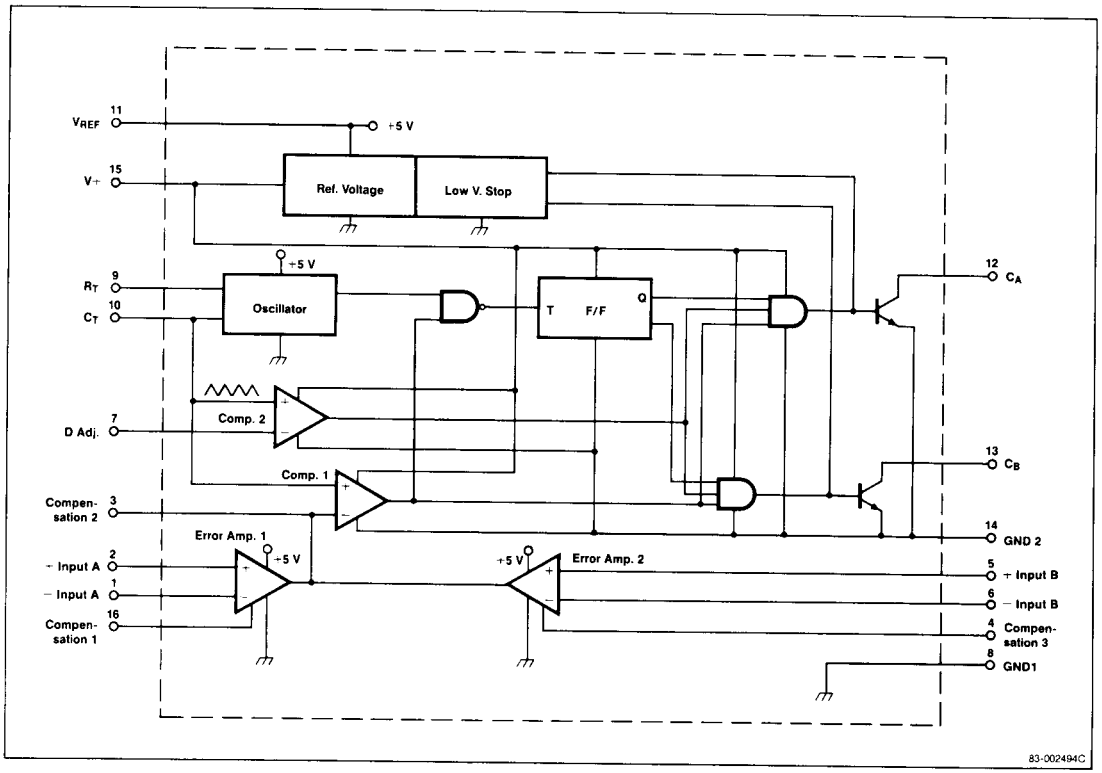

7

Absolute Maximum Ratings

$T_A = 25°C$

Supply Voltage	30 V
Output Voltage	40 V
Output Current (Each Output)	100 mA
Reference Output Current	40 mA
Total Power Dissipation	800 mW
Operating Temperature Range	−20 to +85°C
Storage Temperature Range	−40 to +125°C

Comment: Stress above those listed under "Absolute Maximum Ratings" may cause permanent damage to the device. This is a stress rating only and functional operation of the device at these or any other conditions above those indicated in the operational sections of this specification is not implied. Exposure to absolute maximum rating conditions for extended periods may affect device reliability.

Recommended Operating Conditions

Parameter	Symbol	Limits Min.	Typ.	Max.	Unit	Test Conditions
Supply Voltage	V+	8	12	16	V	
Output Voltage	V_O		24	32	V	
Output Current	I_O	5	20	40	mA	
Reference Output Current	I_{REF}	0	3	5	mA	
Oscillation Frequency	f_{osc}	20	40	100	kHz	

Electrical Characteristics

V+ = 12 V, T_A = 25°C unless otherwise noted

Parameter	Symbol	Limits Min.	Typ.	Max.	Unit	Test Conditions
Reference Section						
Output Voltage	V_O	4.6	5.0	5.4	V	$I_O = 0$
Line Regulation	REG_{IN}		13	35	mV	$8\ V \le V+ \le 20\ V$, $I_{REF} = 0$
Load Regulation	REG_L		−2.5	−10	mV	$0 \le I_{REF} \le 20$ mA
Ripple Rejection	RR		60		dB	f = 120 Hz
V_{REF} Drift	$\Delta V_{REF}/\Delta T$		200	750	μV/°C	$-20°C \le T_{OPT} \le +85°C$
Low Voltage Stop Section						
Startup Voltage	V+ (L to H)		7.5		V	$0 \le V+ \le 12$ V
Hysteresis Voltage	V_{HYS}		0.5		V	$0 \le V+ \le 12$ V
Oscillator Section						
Maximum Oscillation Frequency	f_{max}	100			kHz	
Initial Accuracy			±5	±10	%	R_T, C_T constant
Temperature Stability			−6	−10	%	$-20°C \le T_{OPT} \le +85°C$
Output Voltage (High)	V_{OH}		4		V	
Output Voltage (Low)	V_{OL}		2		V	
Line Frequency Stability			±1	±2	1%	$8\ V \le V+ \le 20$ V
Error Amplifier 1 Section						
Input Offset Voltage	V_{io}		±2	±10	mV	
Input Offset Voltage Drift	$\Delta V_{io}/\Delta T$		±4	±10	μV/°C	$-20°C \le T_{OPT} \le +85°C$
Input Bias Current	I_B		+1.3	+10	μA	
Large Signal Voltage Gain	A_{VOL}	72	87		dB	
Common Mode Input Voltage	V_{icm}	1.2		4.0	V	
Common Mode Rejection Ratio	CMRR		70		dB	
Small Signal Bandwidth	GBW		2		MHz	$A_{V1} = 0$ dB, $C_1 = 560$ pF, $C_2 = 150$ pF

Electrical Characteristics (Cont.)

V+ = 12 V, T_A = 25 °C unless otherwise noted

Parameter	Symbol	Limits Min.	Typ.	Max.	Unit	Test Conditions
Error Amplifier 2 Section						
Input Offset Voltage	V_{IO}		±3	±10	mV	
Input Offset Voltage Drift	$\Delta V_{IO}/\Delta T$		±3	±10	μV/°C	$-20°C \leq T_{OPT} \leq +85°C$
Input Bias Current	I_b		−1.5	−10	μA	
Large Signal Voltage Gain	A_{VOL}	72	100		dB	
Common Mode Input Voltage	V_{icm}	0		3	V	
Common Mode Rejection Ratio	CMRR		70		dB	
Small Signal Bandwidth	GBW		1.2		MHz	A_{V2} = 0 dB, C_3 = 220 pF, C_4 = 470 pF
Maximum Output Current				1.0	mA	
Dead Time Adjustment Section						
Input Bias Current	I_b		−4.5		μA	
Input Voltage (0% Duty)	V_{IN}		1.35		V	
Input Voltage (100% Duty)	V_{IN}		3.3		V	
Output Section						
Collector to Emitter Voltage	V_{CE}	40			V	I_C = 1 mA
Collector to Emitter Cutoff Current	I_{CEO}			10	μA	V_{CE} = 40 V
Collector Saturation Voltage	$V_{CE(SAT)}$		0.55	0.7	V	I_C = 20 mA
Rise Time	t_r		80		ns	I_C = 20 mA, V+ = 12 V, $R_L \doteq 560\ \Omega$
Fall Time	t_f		70		ns	
Total Standby Current	I_{CCSB}		12	15	mA	V+ = 20 V, I_{REF} = 0

Operating Characteristics

T_A = 25 °C

Maximum Power Dissipation

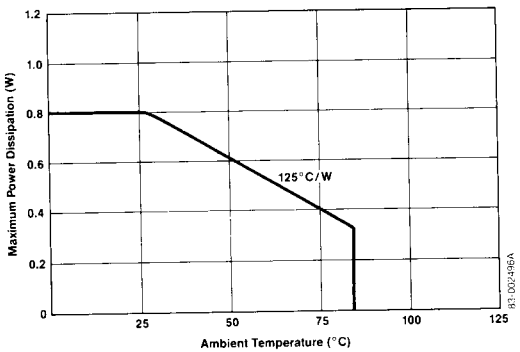

Oscillator Frequency vs. R_T and C_T

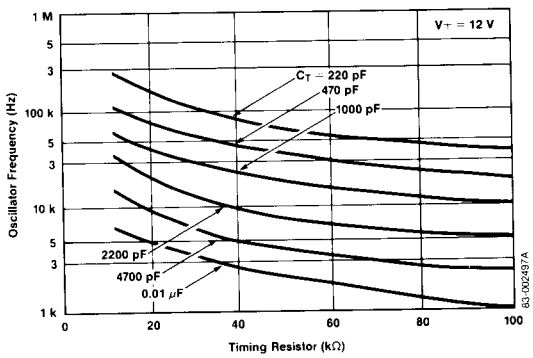

7

Operating Characteristics (Cont.)

$T_A = 25°C$

Error Amplifier I, A_{V1} vs. Frequency

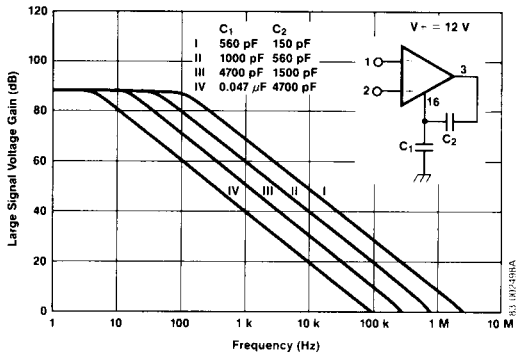

Error Amplifier II, A_{V2} vs. Frequency

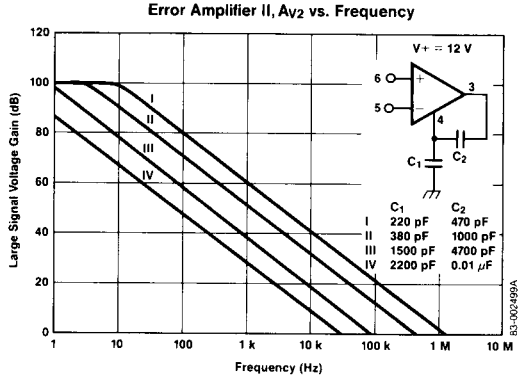

Correct Saturation Voltage vs. Collector Current

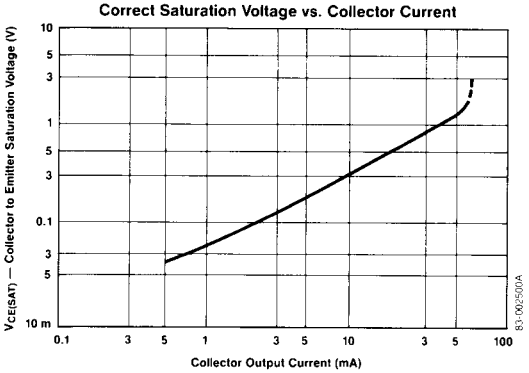

Output Section Rise Time and Fall Time vs. Collector Current

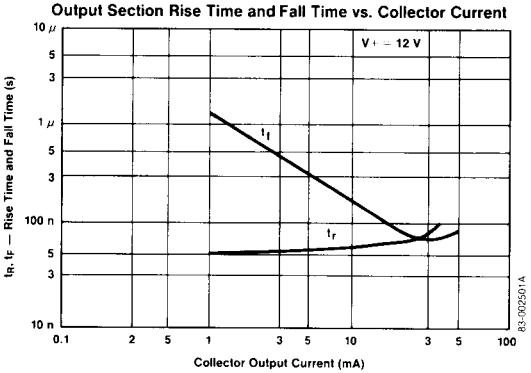

Total Standby Current vs. Supply Voltage

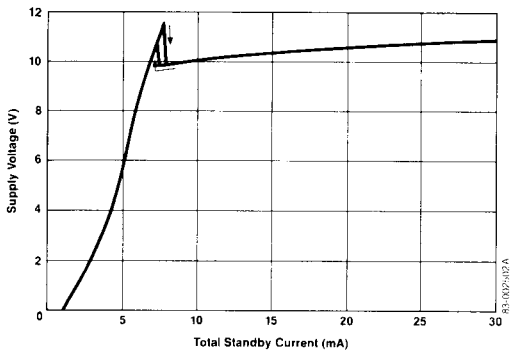

Total Standby Current vs. Ambient Temperature

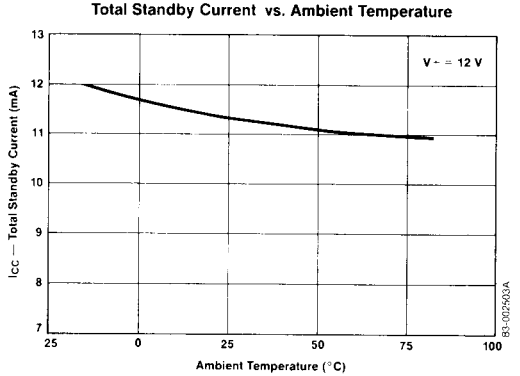

Typical Application

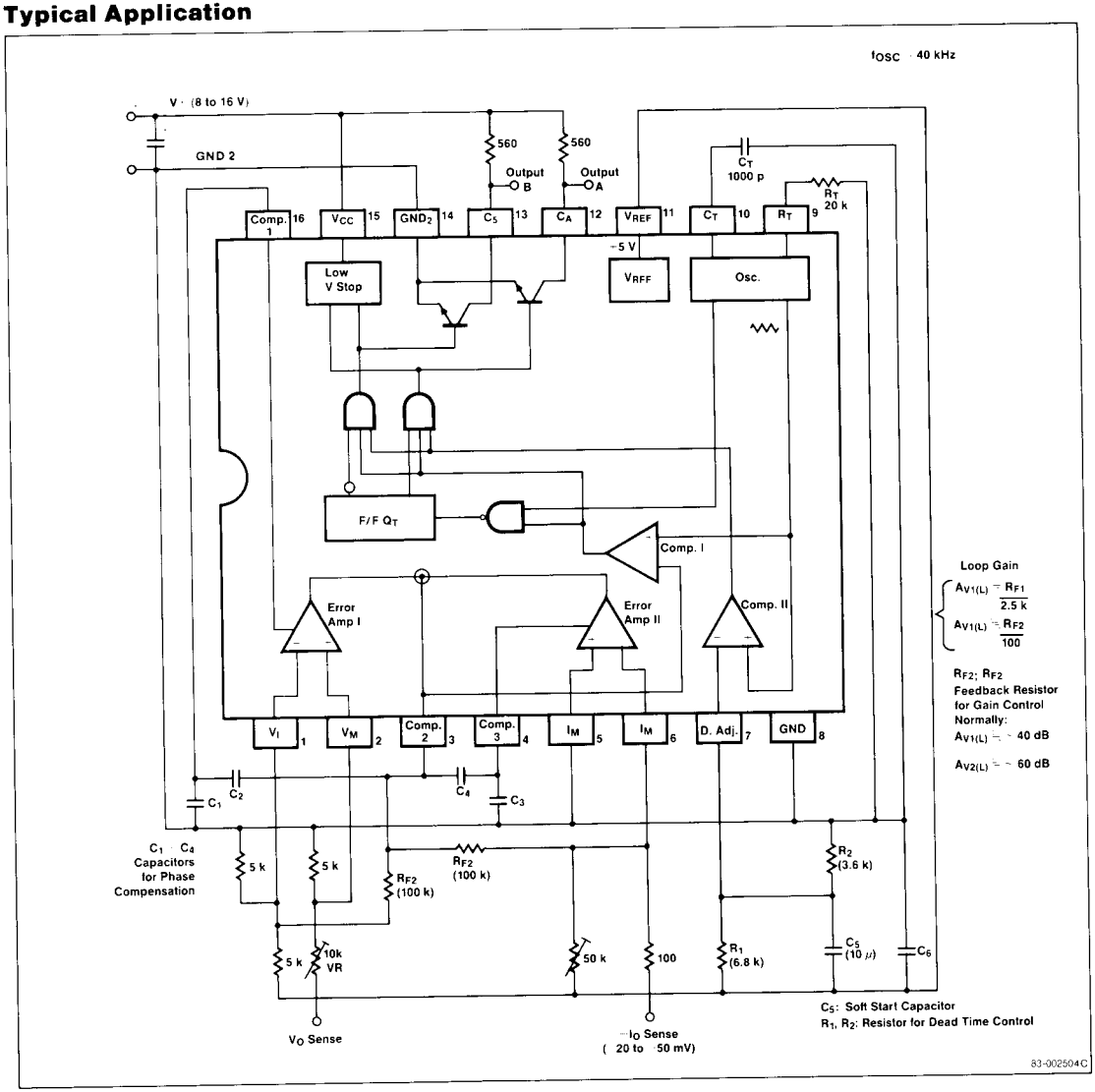

7

Internal Waveforms (Timing Charts)

