UP-RW1245P1

For standby power supplies.
Trickle Design life: 6 – 9 years at 20 °C.



Dimensions (mm)

Terminal Type: Faston 250 with hole

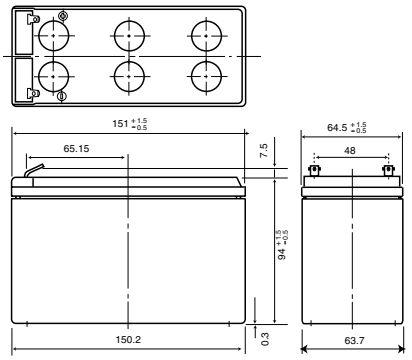

Battery case resin: Standard (UL94HB)

Specifications

Nominal voltage		12 V
Nominal capacity (10 minute rate)		45 W/2 V
Dimensions	Length	151.0 mm
	Width	64.5 mm
	Height	94.0 mm
	Total Height	101.5 mm
Approx. mass		2.6 kg

Characteristics

Capacity (note) (20 °C) (9.6 V cutoff)	30 minute rate 15 minute rate 10 minute rate 5 minute rate	108 W 185 W 254 W 389 W
Internal resistance	Fully charged battery (20 °C)	Approx. 21 mΩ
Temperature dependency of capacity (10 hour rate)	40 °C 20 °C 0 °C -15 °C	102 % 100 % 85 % 65 %
Self discharge (20 °C)	Residual capacity after standing 3 months Residual capacity after standing 6 months Residual capacity after standing 12 months	91 % 83 % 66 %

Watt table

Cutoff	Discharge Runtime at 20 °C (unit: watt)						
	3 min.	5 min.	7 min.	10 min.	15 min.	20 min.	30 min.
9.6 V	503	389	313	254	185	154	108
10.2 V	465	370	299	245	183	151	107
10.8 V	412	313	260	222	171	141	105

(Note) The above characteristics data are average values obtained within three charge/discharge cycles, not the minimum values.

(Note) This battery is designed for high-rate discharge, therefore we do not specify 20-hour-rate discharge capacity.

(Note) When specific conditions are satisfied, this battery can be used for main power supplies. Please consult Panasonic.

Discharge characteristics (20 °C) (Note)

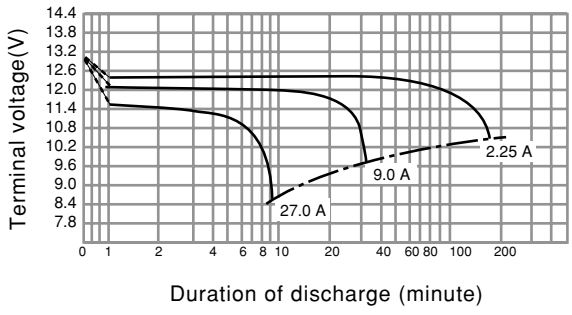

Duration of discharge vs. Discharge current (Note)

