3-Electrode Gas Discharge Tube (GDT)

UN3E5 Series

Description

Gas discharge Tubes (GDT) are classical components for protecting the installations of the telecommunications. It is essential that IT and telecommunications systems -with their high-grade but sensitive electronic circuits - be protected by arresters. They are thus fitted at the input of the power supply system together with varistors and at the connection points to telecommunication lines. They have become equally indispensable for protecting base stations in mobile telephone systems as well as extensive cable television (CATV) networks with their repeaters and distribution systems.

These protective components are also indispensable in other sectors, In AC power transmission systems, they are often used with current-limiting varistors, In customer premises equipment such as DSL modems, WLAN routers, TV sets and cable modems In air-conditioning equipment, the integral black-box concept offers graduated protection by combining arresters with varistors, PTC, diodes and inductor.

Features

- u Non-Radioactive
- u RoHS compliant
- u Low insertion loss
- u Excellent response to fast rising transients
- u Ultra low capacitance
- u 5KA surge capability tested with 8/20μs pulse as defined by IEC 61000-4-5

Applications

- u Communication equipment
- u CATV equipment
- u Test equipment
- u Data lines
- u Power supplies
- u Telecom SLIC protection
- u Broadband equipment
- u ADSL equipment, including ADSL2+
- u XDSL equipment
- u Satellite and CATV equipment
- u Consumer electronics

UN3E5-XXXLM



UN3E5-XXXL



UN3E5-XXXLSMD



Schematic Symbol

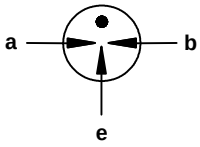

a = Tip
b = Ring
e = Ground
(center electrode)

Agency Approvals

AGENCY	AGENCY FILE NUMBER
	E341061

Product Characteristics

Materials	**Leaded Device:** Nickel-plated with Tinplated wires **Surface Mount:** Dull Tin-plated	
Product Marking	**UNION** **XXXL** XXX -Nominal voltage L -5KA	
Glow to Arc Transition Current	< 0.5 Amps	
Glow Voltage	~60 Volts	
Storage and Operational Temperature	-40 to +90°C	
Weight	**UN3E5-XXXLM**	~0.78g
	UN3E5-XXXLM	~0.66g
	UN2E5-XXXLSMD	~0.68g

@ UN Semiconductor Co., Ltd. 2013
Specifications are subject to change without notice.
Please refer to www.unsemi.com.tw for current information.

3-Electrode Gas Discharge Tube (GDT)

UN3E5 Series

Dimensions (Unit: mm)

Radial Leaded Devices (UN3E5-XXXLM)

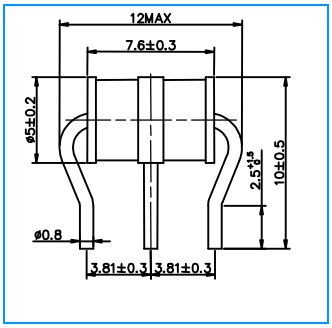

Without wire Devices (UN3E5-XXXL)

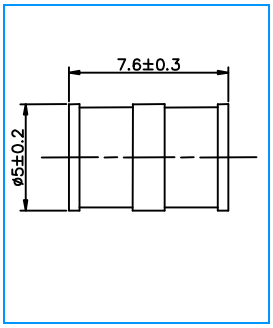

Surface Mount Devices (UN3E5-XXXLSMD)

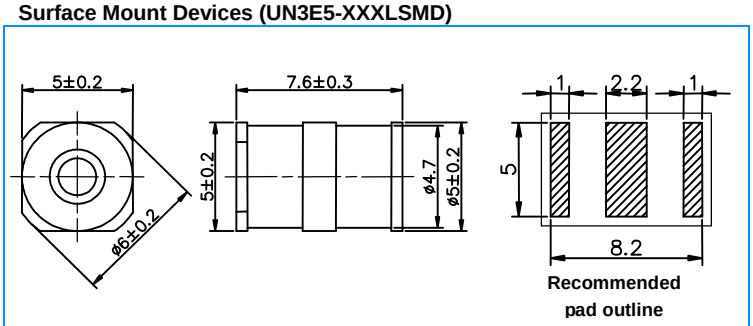

Recommended pad outline

Electrical Characteristics

Part Number	Marking	DC Spark-over Voltage	Maximum Impulse Spark-over Voltage		Minimum Insulation Resistance	Maximum Capacitance	Arc Voltage	Service Life			
								Nominal Impulse Discharge Current	Max Impulse Discharge Current	Nominal Alternating Discharge Current	Impulse Life
		@100V/S	@100V/μs	@1KV/μs		@1MHz	@1A	@8/20μs [4] ±5 times	@8/20μs [4] 1 time	@50Hz [4] 1 Sec 10 times	@10/1000μs [4] 300 times
UN3E5-75LM UN3E5-75L UN3E5-75LSMD	UNION 75L	75V±20%	500V	600V	1 GΩ (at 25V)	1.5pF	~15V	5KA	10KA	5A	200A
UN3E5-90LM UN3E5-90L UN3E5-90LSMD	UNION 90L	90V±20%	500V	600V	1 GΩ (at 50V)	1.5pF	~15V	5KA	10KA	5A	200A
UN3E5-150LM UN3E5-150L UN3E5-150LSMD	UNION 150L	150V±20%	500V	600V	1 GΩ (at 50V)	1.5pF	~20V	5KA	10KA	5A	200A
UN3E5-230LM UN3E5-230L UN3E5-230LSMD	UNION 230L	230V±20%	600V	700V	1 GΩ (at 100V)	1.5pF	~20V	5KA	10KA	5A	200A
UN3E5-250LM UN3E5-250L UN3E5-250LSMD	UNION 250L	250V±20%	600V	700V	1 GΩ (at 100V)	1.5pF	~20V	5KA	10KA	5A	200A
UN3E5-300LM UN3E5-300L UN3E5-300LSMD	UNION 300L	300V±20%	800V	900V	1 GΩ (at 100V)	1.5pF	~20V	5KA	10KA	5A	200A
UN3E5-350LM UN3E5-350L UN3E5-350LSMD	UNION 350L	350V±20%	800V	900V	1 GΩ (at 100V)	1.5pF	~20V	5KA	10KA	5A	200A
UN3E5-420LM UN3E5-420L UN3E5-420LSMD	UNION 420L	420V±20%	900V	1000V	1 GΩ (at 100V)	1.5pF	~20V	5KA	10KA	5A	200A
UN3E5-470LM UN3E5-470L UN3E5-470LSMD	UNION 470L	470V±20%	900V	1000V	1 GΩ (at 100V)	1.5pF	~20V	5KA	10KA	5A	200A
UN3E5-600LM UN3E5-600L UN3E5-600LSMD	UNION 600L	600V±20%	1100V	1200V	1 GΩ (at 100V)	1.5pF	~20V	5KA	10KA	5A	200A

Notes:

1). Terms in accordance with ITU-T K.12 and GB/T 9043-2008
2). At delivery AQL 0.65 level Ⅱ, DIN ISO 2859
3). Tip or ring electrode to center electrode
4). Total current through center electrode, half value through tip respectively ring electrode

@ UN Semiconductor Co., Ltd. 2013
Specifications are subject to change without notice.
Please refer to www.unsemi.com.tw for current information.

3-Electrode Gas Discharge Tube (GDT)

UN3E5 Series

Electrical Rating

Item	Test Condition / Description	Requirement
DC Spark-over Voltage	The voltage is measured with a slowly rate of rise dv / dt=100V/s	To meet the specified value
Impulse Spark-over Voltage	The maximum impulse spark-over voltage is measured with a rise time of dv / dt=100V//μs or 1KV/μs	
Insulation Resistance	The resistance of gas tube shall be measured each terminal each other terminal, please see above spec.	
Capacitance	The capacitance of gas tube shall be measured each terminal to each other terminal. Test frequency :1MHz	
Nominal Impulse Discharge Current	The maximum current applying a waveform of 8/20μs that can be applied across the terminals of the gas tube. One hour after the test is completed, re-testing of the DC spark-over voltage does not exceed ±30% of the nominal DC spark-over voltage. Dwell time between pulses is 3 minutes. 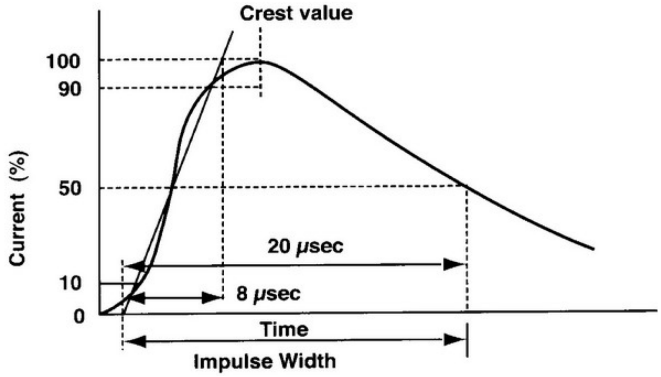	
Nominal Alternating Discharge Current	Rated RMS value of AC current at 50Hz, 1 sec. 10 times. Intervals: 3min. The DC spark-over voltage does not exceed ±30% of the nominal DC spark-over voltage. IR > 10^8ohms.	

Recommended soldering profile

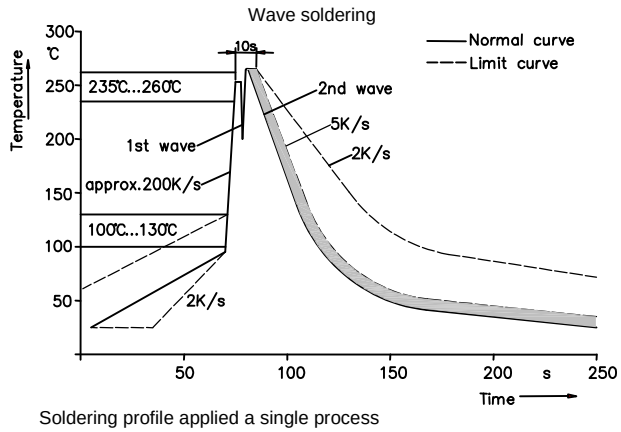

Soldering profile applied a single process

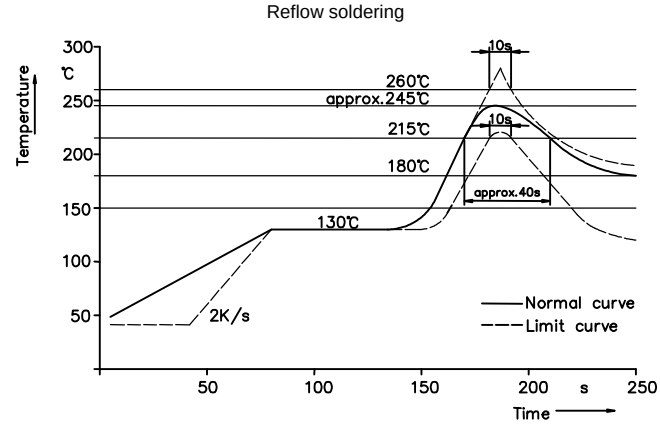

Soldering Parameters - Hand Soldering

Solder Iron Temperature: 350°C +/-5°C
Heating Time: 5 seconds max.

@ UN Semiconductor Co., Ltd. 2013
Specifications are subject to change without notice.
Please refer to www.unsemi.com.tw for current information.

3-Electrode Gas Discharge Tube (GDT)

UN3E5 Series

Part Numbering

UN3E5 – XXX L M

- M, with wire
  No, without wire
  SMD, Surface Mount
- 8/20μs Level L, 5KA
- Nominal DC Spark-over Voltage
  75 = 75V 300=300V
  90 =90V 350 =350V
  150 = 150V 470 =470V
  230 = 230V 600 = 600V
- Series

Packaging

Part Number	Description	Quantity
UN3E5-XXXLM	100PCS per Tray, 10 Trays / Inner Carton	1000
UN3E5-XXXL	100PCS per Tray, 10 Trays / Inner Carton	1000
UN3E5-XXXLSMD	100PCS per Tray, 10 Trays/ Inner Carton	1000
	16mmTape & 13″ Reel	1000

Tape and Reel Dimension (Unit: mm)

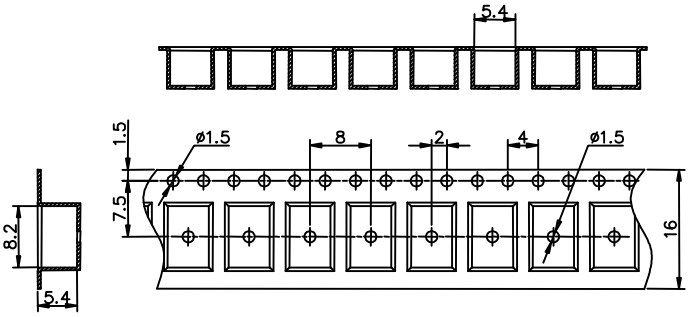

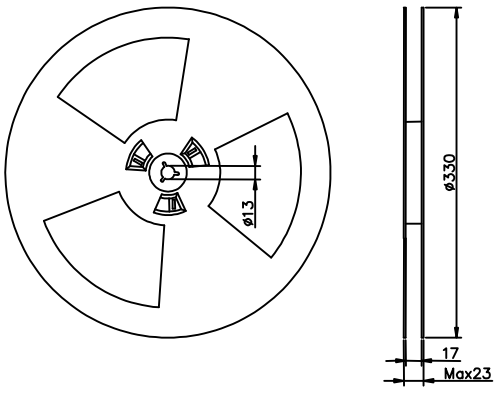

Tray Dimension (Unit: mm)

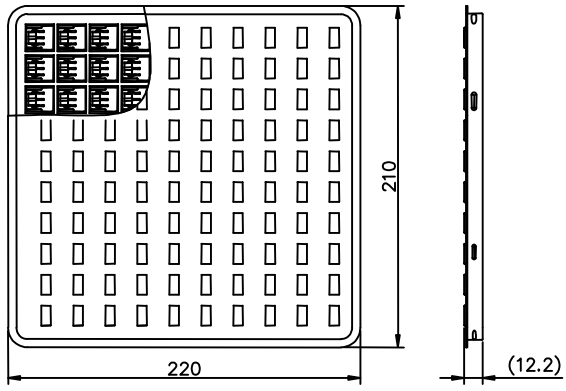

Cautions and warnings

- Gas discharge tubes (GDT) must not be operated directly in power supply networks.
- Gas discharge tubes (GDT) may become hot in case of longer periods of current stress (danger of burning).
- Gas discharge tubes (GDT) may be used only within their specified values. In the event of overload, the head contacts may fail or the component may be destroyed.
- Damaged Gas discharge tubes (GDT) must not be re-used.

@ UN Semiconductor Co., Ltd. 2013
Specifications are subject to change without notice.
Please refer to www.unsemi.com.tw for current information.