Switching Spark Gap

UN2K8 Series

Description

The 2K8 series is a two-terminal, bi-directional, voltage triggered switch, specifically for ignition circuits used in high pressure HID lighting. The gas plasma trigger technology offers very fast switch speeds with improved di/dt values compared to similar function silicon based devices. Switching voltages are fixed depending on the part number selected.

UN2K8-XXXL

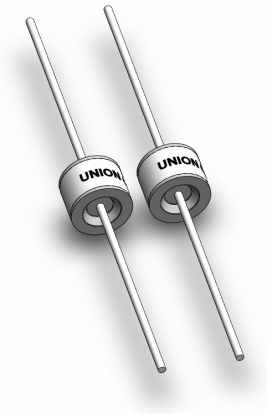

UN2K8-XXX



UN2K8-XXXSMD



Schematic Symbol

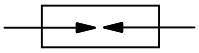

Features

- **u** Non-Radioactive
- **u** RoHS Compliant
- **u** Fast breakdown-time
- **u** Very high switch speed when switch voltage achieved, High di/dt allows for optimum performance of ignition transformers.
- **u** Long service life

Applications

- **u** HID Xenon discharge lamps ignite
- **u** Gas stoves
- **u** Detonating devices(EBW)
- **u** Transient Power
- **u** Other electronic ignition circuit

Product Characteristics

Materials	**Leaded Device:** Nickel-plated with Tinplated wires **Without wire and Surface Mount:** Dull Tin-plated	
Product Marking	**UNION XXXK** XXX -Nominal voltage K - Switch Spark Gap	
Max Load Current	50mA	
Breakdown Time	≤50mS	
Insulation Resistance at DC100 V	>1GΩ	
Capacitance	1.5pF	
Storage Temperature	-40 to +90°C	
Operational Temperature	-20 to +125°C	
Weight	**UN2K8-XXXL**	~1.5g
	UN2K8-XXX	~1.35g
	UN2K8-XXXSMD	~1.5g

@SOCAY Electronics Co., Ltd. 2013
Specifications are subject to change without notice.
Please refer to www.socay.com for current information.

Switching Spark Gap

UN2K8 Series

Dimensions Unit: mm

Axial Leaded Devices (UN2K8-XXXL)

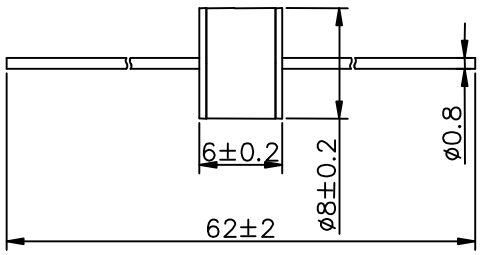

Without wire Devices (UN2K8-XXX)

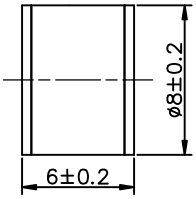

Surface Mount Devices (UN2K8-XXXSMD)

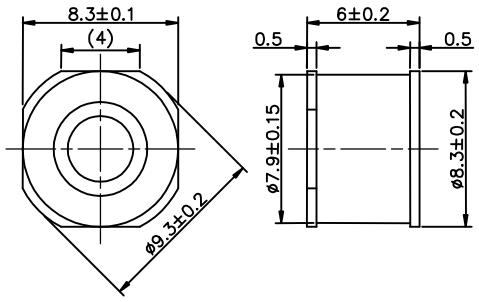

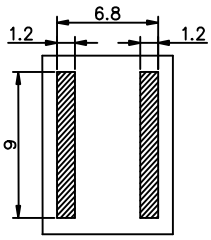

Recommended pad outline

Electrical Specifications

Part Number	UN2K8-230L UN2K8-230 UN2K8-230SMD	UN2K8-300L UN2K8-300 UN2K8-300SMD	UN2K8-350L-1 UN2K8-350-1 UN2K8-350SMD-1	UN2K8-350L UN2K8-350 UN2K8-350SMD	UN2K8-350L-2 UN2K8-350-2 UN2K8-350SMD-2	UN2K8-400L UN2K8-400 UN2K8-400SMD
Nominal breakdown voltage	230V	300V	320V	350V	370V	400V
Initial values [2]						
Static breakdown voltage [1]						
First ignition value after 24 hours in darkness	≤260V	≤340V	≤360V	≤400V	≤420V	≤450V
Following ignition values	195~240V	260~310V	275~330V	300~365V	325~385V	340~420V
Electrical life [3]						
Breakdown voltage						
After life test first ignition value after 24 hours in darkness	≤270V	≤360V	≤380V	≤430V	≤450V	≤480V
Following ignition values	195~265V	260~330V	275~350V	300~385V	325~405V	340~440V
Switching operations	200000 Ignitions	200000 Ignitions	200000 Ignitions	200000 Ignitions	200000 Ignitions	200000 Ignitions
Life test Circuit						
Open Circuit Voltage V_0	$230V_{AC}$	350V	400V	450V	450V	500V
Loading Resistance R	15KΩ	10KΩ	10KΩ	10KΩ	10KΩ	10KΩ
Discharge Capacitance C	2.2μF	680nF	680nF	680nF	680nF	680nF
Inductance L	10μH	0.5μH	0.5μH	0.5μH	0.5μH	0.5μH
Discharge Peak Current I_P	~300A	~500A	~500A	~500A	~500A	~500A
Maximum switching frequency	100Hz	100Hz	100Hz	100Hz	100Hz	100Hz

@SOCAY Electronics Co., Ltd. 2013
Specifications are subject to change without notice.
Please refer to www.socay.com for current information.

Switching Spark Gap

UN2K8 Series

Electrical Specifications (Continue)

Part Number	UN2K8-450L UN2K8-450 UN2K8-450SMD	UN2K8-500L UN2K8-500 UN2K8-500SMD	UN2K8-600L-1 UN2K8-600-1 UN2K8-600SMD-1	UN2K8-600L UN2K8-600 UN2K8-600SMD	UN2K8-800L-1 UN2K8-800-1 UN2K8-800SMD-1	UN2K8-800L UN2K8-800 UN2K8-800SMD
Nominal breakdown voltage	450V	500V	550V	600V	730V	800V
Initial values [2] Static breakdown voltage [1] First ignition value after 24 hours in darkness Following ignition values	 ≤510V 400~475V	 ≤570V 450~530V	 ≤620V 500~585V	 ≤720V 550~640V	 ≤850V 640~810V	 ≤920V 705~860V
Electrical life [3] Breakdown voltage After life test first ignition value after 24 hours in darkness Following ignition values	 ≤540V 400~495V	 ≤600V 450~560V	 ≤650V 500~620V	 ≤750V 550~680V	 ≤900V 640~840V	 ≤950V 705~900V
Switching operations	200000 Ignitions	200000 Ignitions	200000 Ignitions	200000 Ignitions	200000 Ignitions	200000 Ignitions
Life test Circuit						
Open Circuit Voltage V_0	550V	600V	650V	750V	900V	1000V
Loading Resistance R	10KΩ	13KΩ	13KΩ	13KΩ	68KΩ	68KΩ
Discharge Capacitance C	680nF	470nF	470nF	470nF	100nF	100nF
Inductance L	0.5μH	0.1μH	0.1μH	0.1μH	0.4μH	0.4μH
Discharge Peak Current I_P	~500A	Max.1000A	Max.1000A	Max.1000A	~650A	~650A
Maximum switching frequency	100Hz	200Hz	200Hz	200Hz	200Hz	200Hz

1). At delivery AQL 0,65 level II, DIN ISO 2859
2). Fig. 1
3). Fig. 2

Test Circuit

Fig. 1: Breakdown Voltage Test Circuit

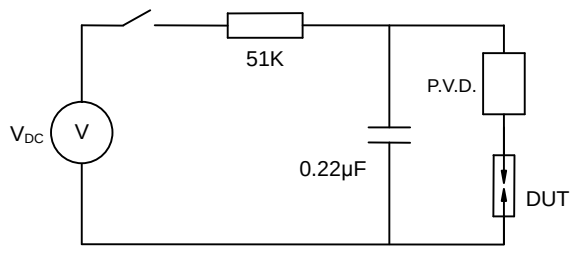

V_{DC} Voltage=1000V
Discharge current 10 ~20 mA
P.V.D. Peak Voltage Detection
DUT Device Under Test

Fig. 2: Electrical Life Test Circuits

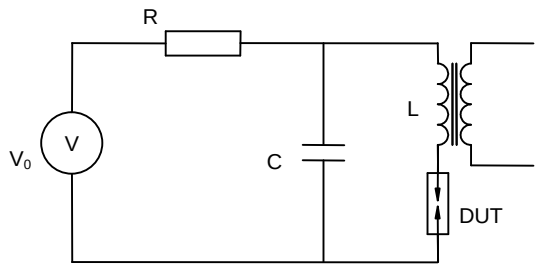

@SOCAY Electronics Co., Ltd. 2013
Specifications are subject to change without notice.
Please refer to www.socay.com for current information.

Switching Spark Gap

UN2K8 Series

Recommended Soldering Profile

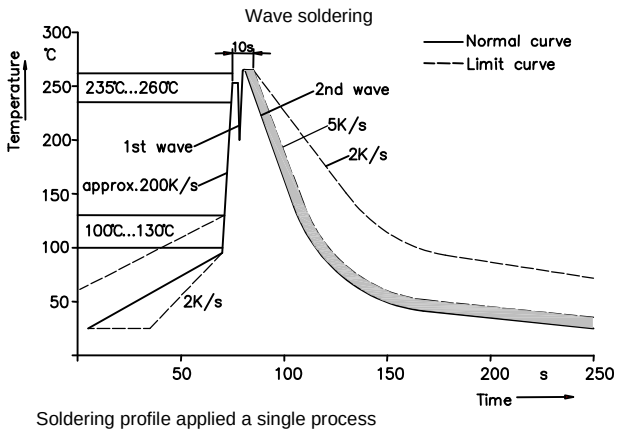

Soldering profile applied a single process

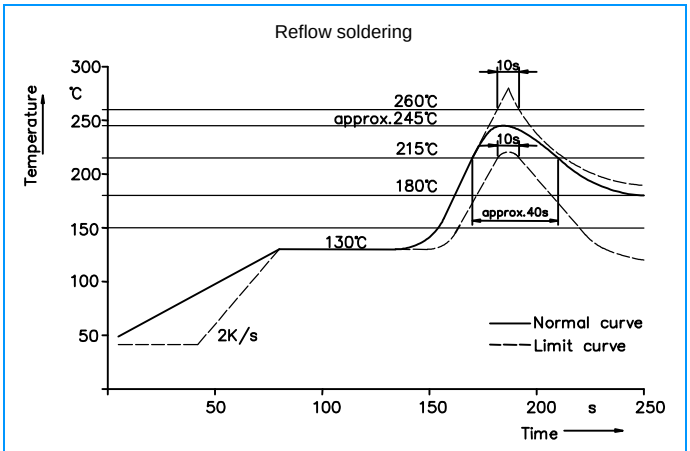

Soldering Parameters - Hand Soldering

Solder Iron Temperature: 350°C +/-5°C
Heating Time: 5 seconds max.

Part Numbering

UN2K8 – XXX L

- L: No, without wire; L, with axial wire; SMD, Surface Mount
- XXX: Nominal breakdown voltage
  - 230 = 230V
  - 300 = 300V
  - 350 = 350V
  - 400 = 400V
  - 500=500V
  - 600=600V
  - 800=800V
- UN2K8: Series

@SOCAY Electronics Co., Ltd. 2013
Specifications are subject to change without notice.
Please refer to www.socay.com for current information.

Switching Spark Gap

UN2K8 Series

Packaging Information Unit: mm

Part Number	Description	Quantity
UN2K8-XXXL	100PCS per Tray, 10 Trays / Inner Carton	1000
UN2K8-XXX	100PCS per Tray, 10 Trays / Inner Carton	1000
UN2K8-XXXSMD	100PCS per Tray, 10 Trays / Inner Carton	1000
	Tape & Reel -16mm tape/13″Reel	500

Tray used in UN2K8-XXXL

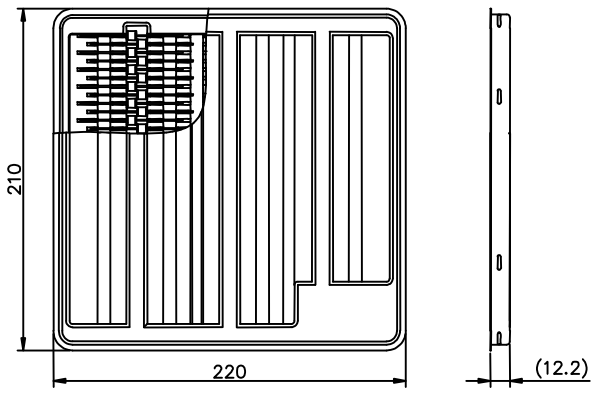

Tray used in UN2K8-XXX / UN2K8-XXXSMD

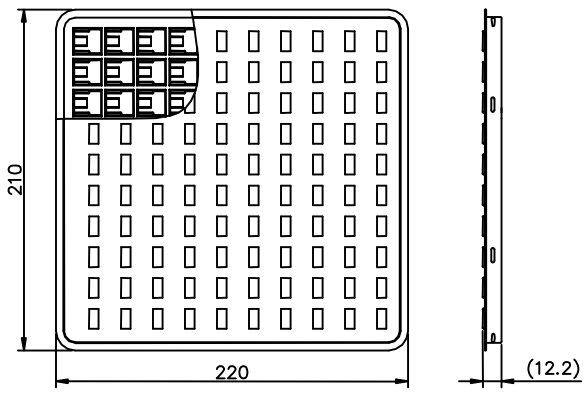

Tape Used in UN2K8-XXXSMD

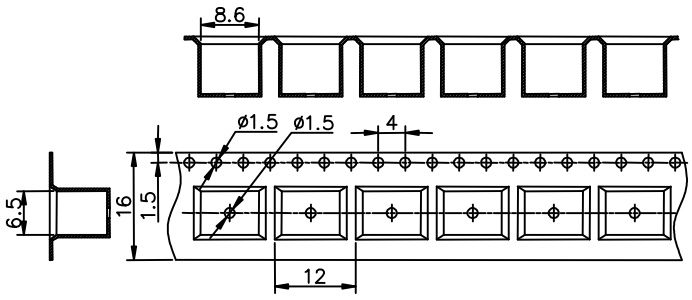

Reel

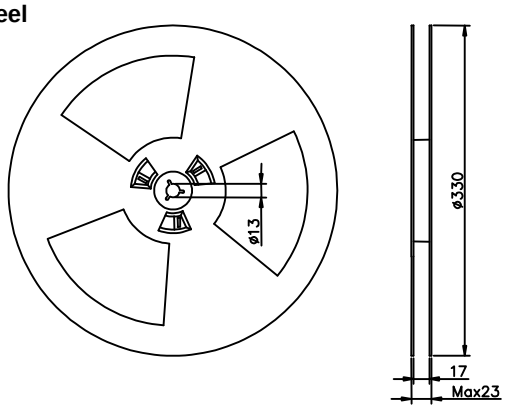

Cautions and warnings

- Switching spark gaps may be used only within their specified values.
- Damaged switching spark gaps must not be re-used.

@SOCAY Electronics Co., Ltd. 2013
Specifications are subject to change without notice.
Please refer to www.socay.com for current information.