2-Electrode Gas Discharge Tube (GDT)

UN2E8 Series

Description

Gas discharge Tubes (GDT) are classical components for protecting the installations of the telecommunications. It is essential that IT and telecommunications systems -with their high-grade but sensitive electronic circuits - be protected by arresters. They are thus fitted at the input of the power supply system together with varistors and at the connection points to telecommunication lines. They have become equally indispensable for protecting base stations in mobile telephone systems as well as extensive cable television (CATV) networks with their repeaters and distribution systems.

These protective components are also indispensable in other sectors, In AC power transmission systems, they are often used with current-limiting varistors, In customer premises equipment such as DSL modems, WLAN routers, TV sets and cable modems In air-conditioning equipment, the integral black-box concept offers graduated protection by combining arresters with varistors, PTC, diodes and inductor.

UN2E8-XXXM/HL

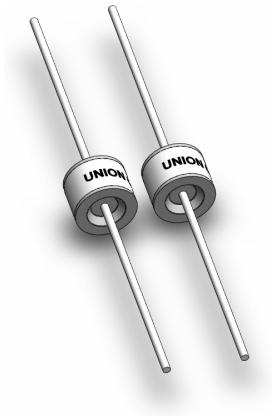

UN2E8-XXXM/H



UN2E8-XXXM/HSMD



Schematic Symbol

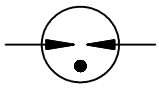

Features

- Non-Radioactive
- RoHS compliant
- High insulation resistance
- Excellent response to fast rising transients
- Ultra low capacitance
- 10~20KA surge capability tested with 8/20μs pulse as defined by IEC 61000-4-5

Applications

- Communication lines and equipment
- CATV equipment
- Test equipment
- Data lines
- Power supplies
- Instrumentation circuits
- Medical electronics
- ADSL equipment
- Telecom SLIC protection

Agency Approvals

AGENCY	AGENCY FILE NUMBER
	E341061

Product Characteristics

Materials	**Leaded Device:** Nickel-plated with Tinplated wires **Surface Mount:** Dull Tin-plated	
Product Marking	**UNION XXXM/H** XXX -Nominal voltage M - 10KA H - 20KA	
Glow to Arc Transition Current	< 0.5 Amps	
Glow Voltage	~60 Volts	
Storage and Operational Temperature	-40 to +90°C	
Weight	**UN2E8-XXXML**	~1.5g
	UN2E8-XXXHL	~1.6g
	UN2E8-XXXM/H	~1.35g
	UN2E8-XXXM/HSMD	~1.5g

@SOCAY Electronics Co., Ltd. 2013
Specifications are subject to change without notice.
Please refer to www.socay.com for current information.

2-Electrode Gas Discharge Tube (GDT)

UN2E8 Series

Dimensions Unit: mm

Axial Leaded Devices (UN2E8-XXXML)

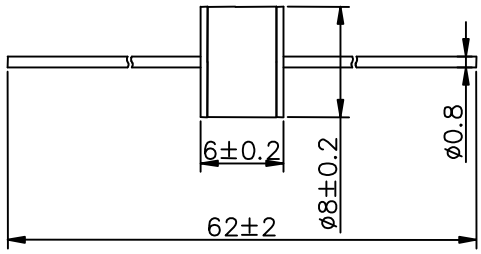

Without wire Devices (UN2E8-XXXM/H)

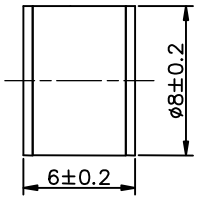

Axial Leaded Devices (UN2E8-XXXHL)

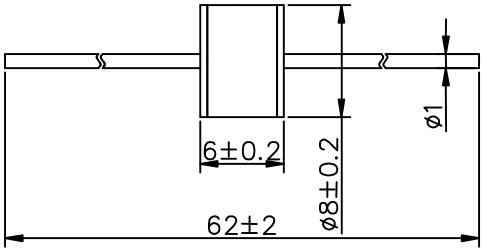

Surface Mount Devices (UN2E8-XXXM/HSMD)

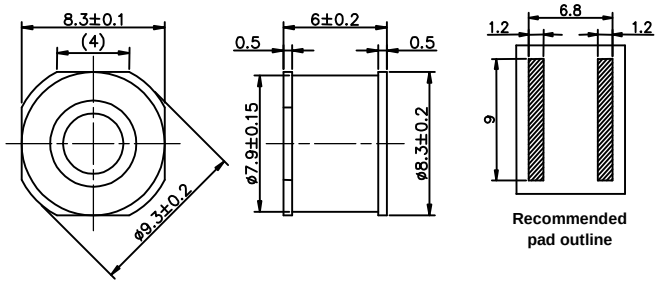

Electrical Characteristics

Part Number	Marking	DC Spark-over Voltage	Maximum Impulse Spark-over Voltage		Minimum Insulation Resistance	Maximum Capacitance	Arc Voltage	Service Life			
								Nominal Impulse Discharge Current	Max Impulse Discharge Current	Nominal Impulse Discharge Current	Impulse Life
		@100V/S	@100V/μs	@1KV/μs		@1MHz	@1A	@8/20μs ±5 times	@8/20μs 1 time	@50Hz 1 Sec 10 times	@10/1000μs 300 times
UN2E8-75M UN2E8-75ML UN2E8-75MSMD	75M	75V±20%	500V	600V	1 GΩ (at 25V)	1.5pF	~15V	10KA	20KA	10A	100A
UN2E8-90M UN2E8-90ML UN2E8-90MSMD	90M	90V±20%	500V	600V	1 GΩ (at 50V)	1.5pF	~15V	10KA	20KA	10A	100A
UN2E8-150M UN2E8-150ML UN2E8-150MSMD	150M	150V±20%	500V	600V	1 GΩ (at 50V)	1.5pF	~20V	10KA	20KA	10A	100A
UN2E8-230M UN2E8-230ML UN2E8-230MSMD	230M	230V±20%	600V	700V	1 GΩ (at 100V)	1.5pF	~20V	10KA	20KA	10A	100A
UN2E8-250M UN2E8-250ML UN2E8-250MSMD	250M	250V±20%	700V	800V	1 GΩ (at 100V)	1.5pF	~20V	10KA	20KA	10A	100A
UN2E8-300M UN2E8-300ML UN2E8-300MSMD	300M	300V±20%	800V	900V	1 GΩ (at 100V)	1.5pF	~20V	10KA	20KA	10A	100A
UN2E8-350M UN2E8-350ML UN2E8-350MSMD	350M	350V±20%	800V	900V	1 GΩ (at 100V)	1.5pF	~20V	10KA	20KA	10A	100A

@SOCAY Electronics Co., Ltd. 2013
Specifications are subject to change without notice.
Please refer to www.socay.com for current information.

2-Electrode Gas Discharge Tube (GDT)

UN2E8 Series

Electrical Characteristics (Continue)

Part Number	Marking	DC Spark-over Voltage	Maximum Impulse Spark-over Voltage		Minimum Insulation Resistance	Maximum Capacitance	Arc Voltage	Service Life			
								Nominal Impulse Discharge Current	Max Impulse Discharge Current	Nominal Alternating Discharge Current	Impulse Life
		@100V/S	@100V/μs	@1KV/μs		@1MHz	@1A	@8/20μs ±5 times	@8/20μs 1 time	@50Hz 1 Sec 10 times	@10/1000μs 300 times
UN2E8-420M UN2E8-420ML UN2E8-420MSMD	420M	420V±20%	900V	1000V	1 GΩ (at 100V)	1.5pF	~20V	10KA	20KA	10A	100A
UN2E8-470M UN2E8-470ML UN2E8-470MSMD	470M	470V±20%	900V	1000V	1 GΩ (at 100V)	1.5pF	~20V	10KA	20KA	10A	100A
UN2E8-600M UN2E8-600ML UN2E8-600MSMD	600M	600V±20%	1100V	1200V	1 GΩ (at 100V)	1.5pF	~20V	10KA	20KA	10A	100A
UN2E8-800M UN2E8-800ML UN2E8-800MSMD	800M	800V±20%	1200V	1400V	1 GΩ (at 100V)	1.5pF	~20V	10KA	20KA	10A	100A
UN2E8-75H UN2E8-75HL UN2E8-75HSMD	75H	75V±20%	500V	600V	1 GΩ (at 25V)	1.5pF	~15V	20KA	25KA	20A	200A
UN2E8-90H UN2E8-90HL UN2E8-90HSMD	90H	90V±20%	500V	600V	1 GΩ (at 50V)	1.5pF	~15V	20KA	25KA	20A	200A
UN2E8-150H UN2E8-150HL UN2E8-150HSMD	150H	150V±20%	500V	600V	1 GΩ (at 50V)	1.5pF	~20V	20KA	25KA	20A	200A
UN2E8-230H UN2E8-230HL UN2E8-230HSMD	230H	230V±20%	600V	700V	1 GΩ (at 100V)	1.5pF	~20V	20KA	25KA	20A	200A
UN2E8-250H UN2E8-250HL UN2E8-250HSMD	250H	250V±20%	700V	800V	1 GΩ (at 100V)	1.5pF	~20V	20KA	25KA	20A	200A
UN2E8-300H UN2E8-300HL UN2E8-300HSMD	300H	300V±20%	800V	900V	1 GΩ (at 100V)	1.5pF	~20V	20KA	25KA	20A	200A
UN2E8-350H UN2E8-350HL UN2E8-350HSMD	350H	350V±20%	800V	900V	1 GΩ (at 100V)	1.5pF	~20V	20KA	25KA	20A	200A
UN2E8-420H UN2E8-420HL UN2E8-420HSMD	420H	420V±20%	900V	1000V	1 GΩ (at 100V)	1.5pF	~20V	20KA	25KA	20A	200A
UN2E8-470H UN2E8-470HL UN2E8-470HSMD	470H	470V±20%	900V	1000V	1 GΩ (at 100V)	1.5pF	~20V	20KA	25KA	20A	200A
UN2E8-600H UN2E8-600HL UN2E8-600HSMD	600H	600V±20%	1100V	1200V	1 GΩ (at 100V)	1.5pF	~20V	20KA	25KA	20A	200A
UN2E8-800H UN2E8-800HL UN2E8-800HSMD	800H	800V±20%	1200V	1400V	1 GΩ (at 100V)	1.5pF	~20V	20KA	25KA	20A	200A

Notes:

1). Terms in accordance with ITU-T K.12 and GB/T 9043-2008

2). At delivery AQL 0.65 level Ⅱ, DIN ISO 2859

@SOCAY Electronics Co., Ltd. 2013
Specifications are subject to change without notice.
Please refer to www.socay.com for current information.

2-Electrode Gas Discharge Tube (GDT)

UN2E8 Series

Electrical Rating

Item	Test Condition / Description	Requirement
DC Spark-over Voltage	The voltage is measured with a slowly rate of rise dv / dt=100V/s	To meet the specified value
Impulse Spark-over Voltage	The maximum impulse spark-over voltage is measured with a rise time of dv / dt=100V//μs or 1KV/μs	
Insulation Resistance	The resistance of gas tube shall be measured each terminal each other terminal, please see above spec.	
Capacitance	The capacitance of gas tube shall be measured each terminal to each other terminal. Test frequency :1MHz	
Nominal Impulse Discharge Current	The maximum current applying a waveform of 8/20μs that can be applied across the terminals of the gas tube. One hour after the test is completed, re-testing of the DC spark-over voltage does not exceed ±30% of the nominal DC spark-over voltage. Dwell time between pulses is 3 minutes. 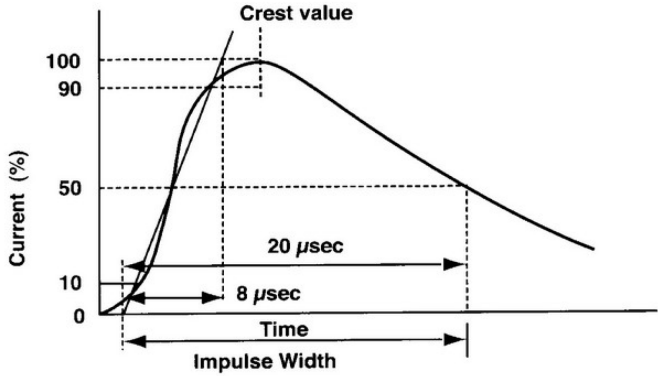	
Nominal Alternating Discharge Current	Rated RMS value of AC current at 50Hz, 1 sec. 10 times. Intervals: 3min. The DC spark-over voltage does not exceed ±30% of the nominal DC spark-over voltage. IR > 10^8ohms.	

Recommended soldering profile

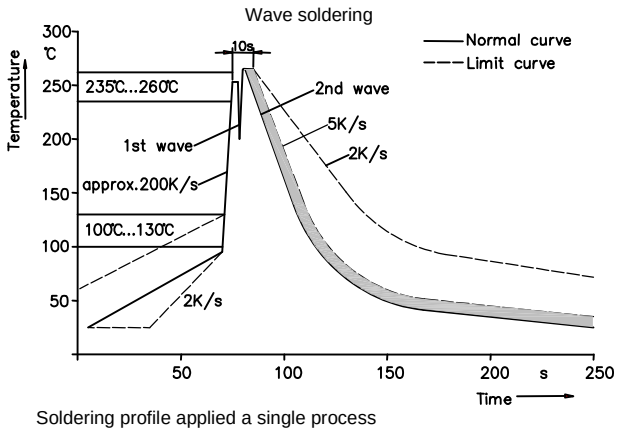

Soldering profile applied a single process

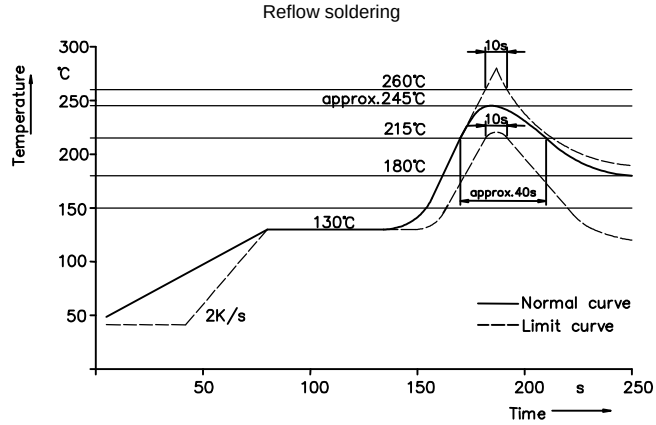

Soldering Parameters - Hand Soldering

Solder Iron Temperature: 350°C +/-5°C
Heating Time: 5 seconds max.

@SOCAY Electronics Co., Ltd. 2013
Specifications are subject to change without notice.
Please refer to www.socay.com for current information.

2-Electrode Gas Discharge Tube (GDT)

UN2E8 Series

Part Numbering

U N 2 E 8 – X X X M L

- L: No, without wire; L, with axial wire; SMD, Surface Mount
- M: 8/20μs Level — M, 10KA; H, 20KA
- XXX: Nominal DC Spark-over Voltage
  - 75 = 75V
  - 90 = 90V
  - 150 = 150V
  - 230 = 230V
  - 350=350V
  - 470=470V
  - 600=600V
  - 800=800V
- UN2E8: Series

Packaging Information Unit: mm

Part Number	Description	Quantity
UN2E8-XXXM / UN2E8XXXH	100PCS per Tray, 10 Trays / Inner Carton	1000
UN2E8-XXXML / UN2E8XXXHL	100PCS per Tray, 10 Trays / Inner Carton	1000
UN2E8-XXXMSMD / UN2E8XXXHSMD	100PCS per Tray, 10 Trays / Inner Carton	1000
	Tape & Reel -16mm tape/13″Reel	500

Tray used in UN2E8-XXXML / UN2E8-XXXHL

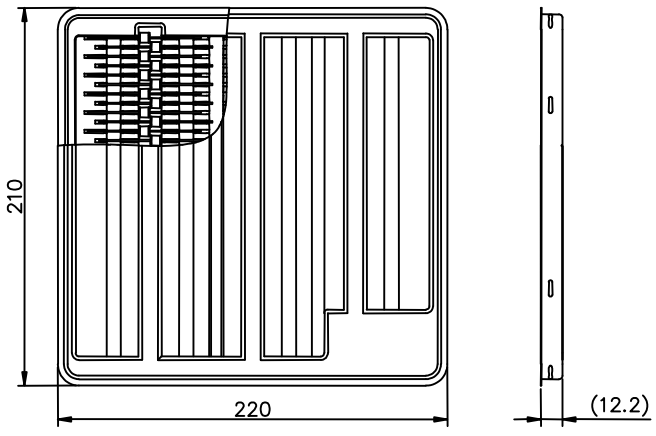

Tray used in UN2E8-XXXM / UN2E8-XXXH / UN2E8-XXXSMD

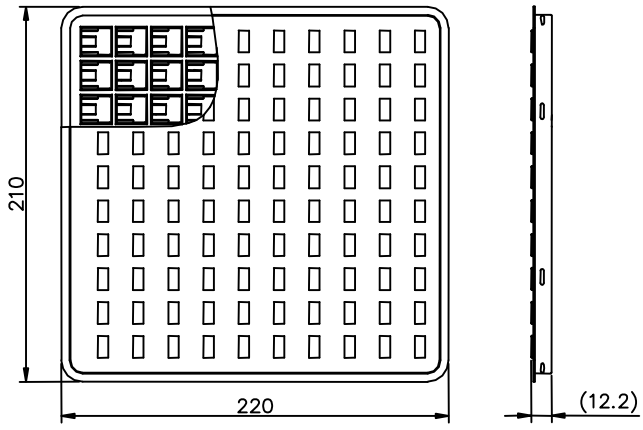

@SOCAY Electronics Co., Ltd. 2013
Specifications are subject to change without notice.
Please refer to www.socay.com for current information.

2-Electrode Gas Discharge Tube (GDT)

UN2E8 Series

Tape and Reel Dimensions Unit: mm

Tape **Used in UN2E8-XXXMSMD /UN2E8-XXXHSMD**

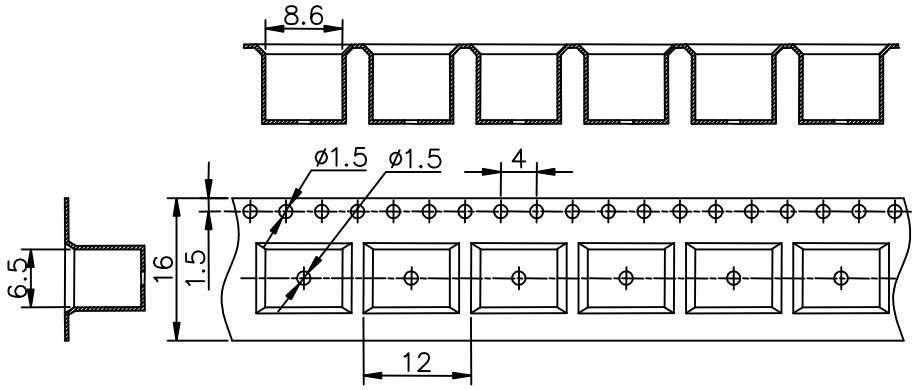

Reel

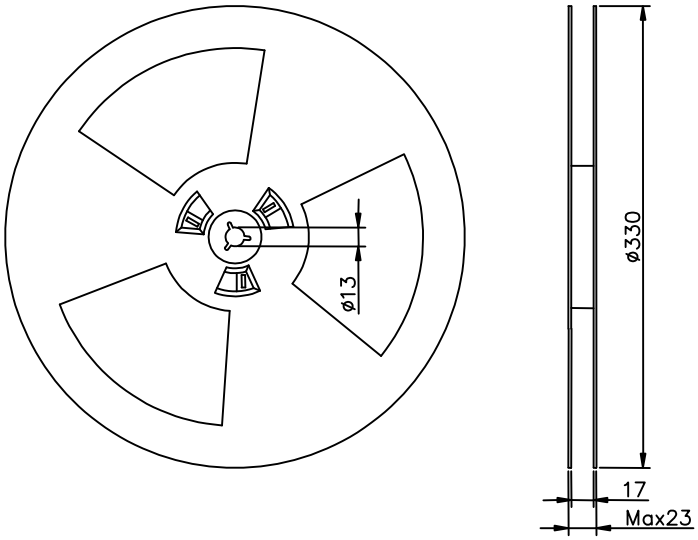

Packaging Information (Continue) Unit: mm

- **u** Gas discharge tubes (GDT) must not be operated directly in power supply networks.
- **u** Gas discharge tubes (GDT) may become hot in case of longer periods of current stress (danger of burning).
- **u** Gas discharge tubes (GDT) may be used only within their specified values. In the event of overload, the head contacts may fail or the component may be destroyed.
- **u** Damaged Gas discharge tubes (GDT) must not be re-used.

@SOCAY Electronics Co., Ltd. 2013
Specifications are subject to change without notice.
Please refer to www.socay.com for current information.