High Voltage 2-Electrode Gas Discharge Tube (GDT)

UN2E5 Series

Description

The high voltage (1.0- 3.5KV) gas discharge tubes are designed for surge protection and high isolation applications, and for applications for which bias voltages or signal levels of several hundred volts are normally present.

UN2E5-XXXDL **UN2E5-XXXD**

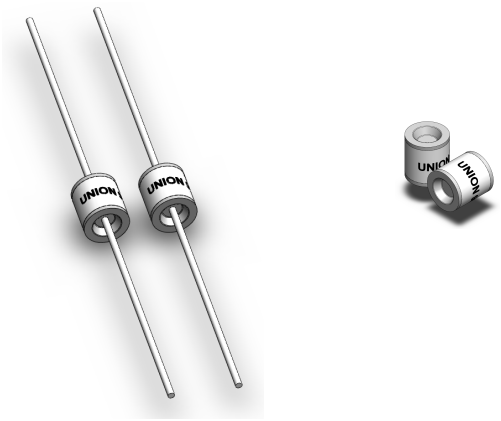

Agency Approvals

- Non-Radioactive
- RoHS compliant
- Low insertion loss
- Excellent response to fast rising transients
- Ultra low capacitance
- 5KA surge capability tested with 8/20μs pulse as defined by IEC 61000-4-5

Schematic Symbol

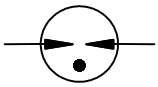

Applications

- CRT terminals
- CATV equipment
- Antennas
- Power supplies
- Medical electronics

Product Characteristics

Materials	Nickel-plated with Tinplated wires	
Product Marking	**UNION XXXXD** XXXX -Nominal voltage D -2.5KA	
Glow to Arc Transition Current	< 0.5Amps	
Glow Voltage	~180 Volts	
Storage and Operational Temperature	-40 to +90°C	
Weight	**UN2E5-XXXDL**	~1.0g
	UN2E5-XXXD	~0.85g

@ UN Semiconductor Co., Ltd. 2013
Specifications are subject to change without notice.
Please refer to www.unsemi.com.tw for current information.

High Voltage 2-Electrode Gas Discharge Tube (GDT)

UN2E5 Series

Dimensions (Unit: mm)

Axial Leaded Devices (UN2E5-XXXDL)

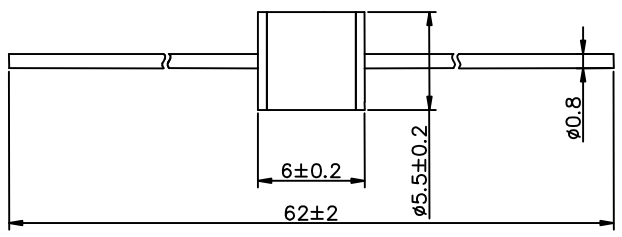

Without wire Devices (UN2E5-XXXD)

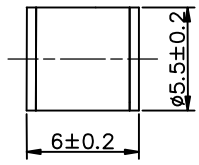

Electrical Characteristics

Part Number	Marking	DC Spark-over Voltage	Maximum Impulse Spark-over Voltage		Minimum Insulation Resistance	Maximum Capacitance	Arc Voltage	Service Life	
								Nominal Impulse Discharge Current	Max Impulse Discharge Current
		@100V/S	@100V/μs	@1KV/μs		@1MHz	@1A	@8/20μs ±5 times	@8/20μs 1 time
UN2E5-1000DL UN2E5-1000D	1000D	1000V±20%	1500V	1600V	1 GΩ (at 100V)	1.0pF	~25V	2.5KA	5KA
UN2E5-1600DL UN2E5-1600D	1600D	1600V±20%	2200V	2400V	1 GΩ (at 100V)	1.0pF	~25V	2.5KA	5KA
UN2E5-2000DL UN2E5-2000D	2000D	2000V±20%	3000V	3500V	1 GΩ (at 100V)	1.0pF	~25V	2.5KA	5KA
UN2E5-2500DL UN2E5-2500D	2500D	2500V±20%	3800V	4000V	1 GΩ (at 100V)	1.0pF	~25V	2.5KA	5KA
UN2E5-2700DL UN2E5-2700D	2700D	2700V±20%	3800V	4000V	1 GΩ (at 100V)	1.0pF	~25V	2.5KA	5KA
UN2E5-3000DL UN2E5-3000D	3000D	3000V±20%	4300V	4500V	1 GΩ (at 100V)	1.0pF	~25V	2.5KA	5KA
UN2E5-3500DL UN2E5-3500D	3500D	3500V±20%	4800V	5000V	1 GΩ (at 100V)	1.0pF	~25V	2.5KA	5KA

Notes:

1). Terms in accordance with ITU-T K.12 and GB/T 9043-2008

2). At delivery AQL 0.65 level Ⅱ, DIN ISO 2859

@ UN Semiconductor Co., Ltd. 2013
Specifications are subject to change without notice.
Please refer to www.unsemi.com.tw for current information.

High Voltage 2-Electrode Gas Discharge Tube (GDT)

UN2E5 Series

Electrical Rating

Item	Test Condition / Description	Requirement
DC Spark-over Voltage	The voltage is measured with a slowly rate of rise dv / dt=100V/s	To meet the specified value
Impulse Spark-over Voltage	The maximum impulse spark-over voltage is measured with a rise time of dv / dt=100V//μs or 1KV/μs	
Insulation Resistance	The resistance of gas tube shall be measured each terminal each other terminal, please see above spec.	
Capacitance	The capacitance of gas tube shall be measured each terminal to each other terminal. Test frequency :1MHz	
Nominal Impulse Discharge Current	The maximum current applying a waveform of 8/20μs that can be applied across the terminals of the gas tube. One hour after the test is completed, re-testing of the DC spark-over voltage does not exceed ±30% of the nominal DC spark-over voltage. Dwell time between pulses is 3 minutes. 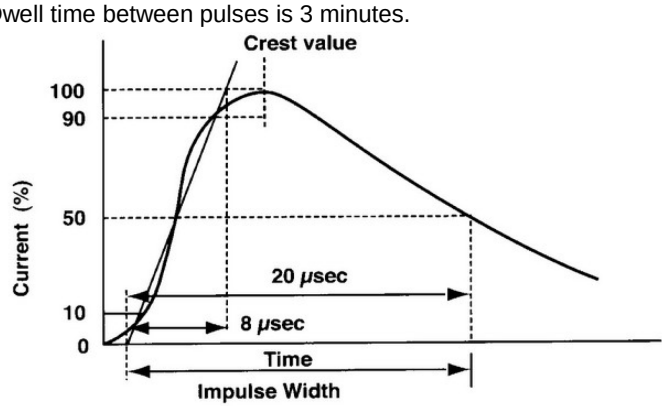 	

Recommended soldering profile

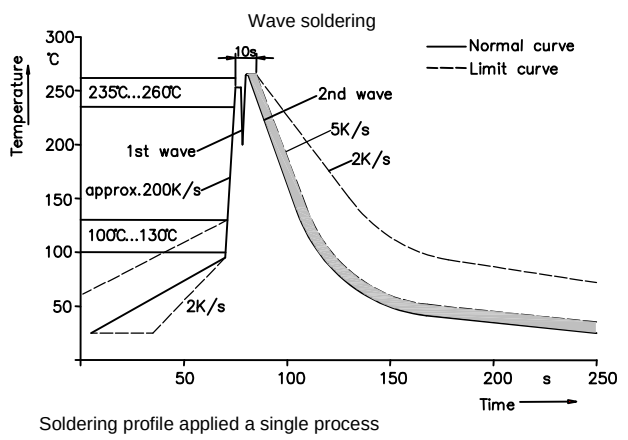

Soldering profile applied a single process

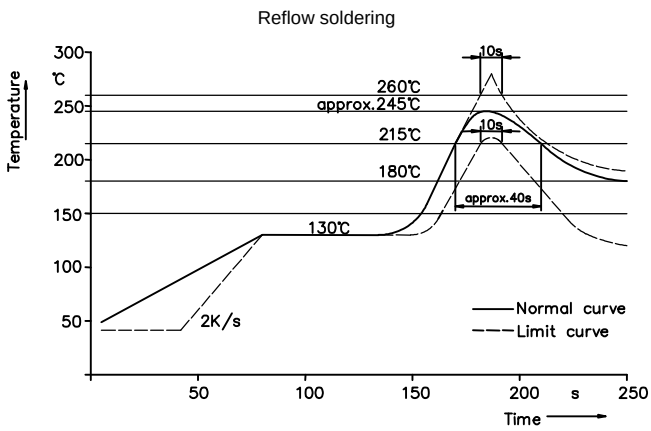

Soldering Parameters - Hand Soldering

Solder Iron Temperature: 350°C +/-5°C
Heating Time: 5 seconds max.

@ UN Semiconductor Co., Ltd. 2013
Specifications are subject to change without notice.
Please refer to www.unsemi.com.tw for current information.

High Voltage 2-Electrode Gas Discharge Tube (GDT)

UN2E5 Series

Part Numbering

UN2E5 – XXX D L

- L, with axial wire
  No, without wire
- 8/20μs Level D, 2.5KA
- Nominal DC Spark-over Voltage
  1000 = 1000V 3000=3000V
  1600 = 1600V 3500=3500V
  2000 = 2000V
  2500 = 2500V
- Series

Packaging Information Unit: mm

Part Number	Description	Quantity
UN2E5-XXXDL	100PCS per Tray, 10 Trays / Inner Carton	1000
UN2E5-XXXD	100PCS per Tray, 10 Trays / Inner Carton	1000

Tray used in UN2E5-XXXDL

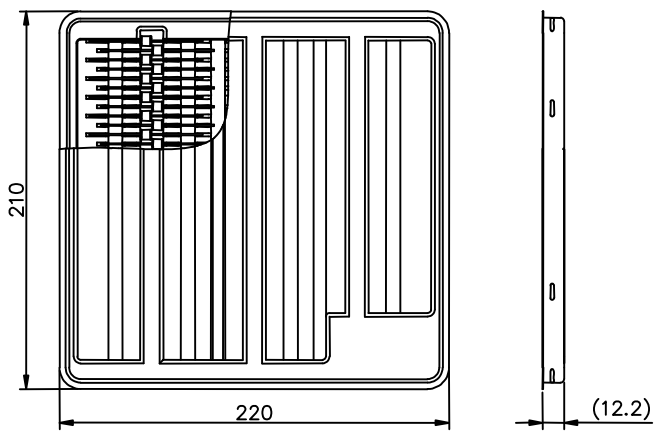

Tray used in UN2E5-XXXD

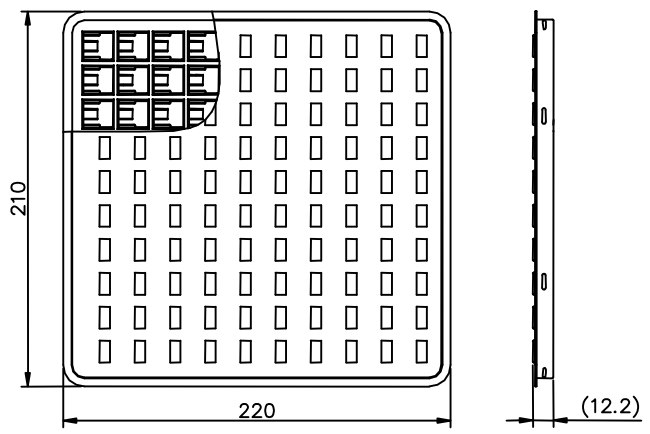

Cautions and warnings

- Gas discharge tubes (GDT) must not be operated directly in power supply networks.
- Gas discharge tubes (GDT) may become hot in case of longer periods of current stress (danger of burning).
- Gas discharge tubes (GDT) may be used only within their specified values. In the event of overload, the head contacts may fail or the component may be destroyed.
- Damaged Gas discharge tubes (GDT) must not be re-used.

@ UN Semiconductor Co., Ltd. 2013
Specifications are subject to change without notice.
Please refer to www.unsemi.com.tw for current information.