Surface Mount 2-Electrode Gas Discharge Tube (GDT)

UN1812 Series

Description

Gas discharge Tubes (GDT) are classical components for protecting the installations of the telecommunications. It is essential that IT and telecommunications systems -with their high-grade but sensitive electronic circuits - be protected by arresters.

The 1812 series GDT offers high surge ratings in a miniature package. It's designed for surface mounting on PCB with small size 4.5x3.2x2.7mm. Low insertion loss is perfectly suited to broadband equipment applications. The capacitance does not vary with voltage, and will not cause operational problems with ADSL2+, where capacitance variation across Tip and Ring is undesirable. These devices are extremely robust and are able to divert a 500A pulse in a miniature package 1812 without destruction.

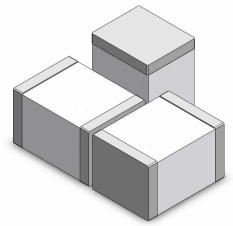

Schematic Symbol

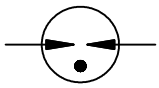

Features

- Non-Radioactive
- RoHS compliant
- Ultra low capacitance (<1.0 pF)
- UL recognized
- Excellent response to fast rising transients
- 2KA surge capability tested with 8/20μs pulse as defined by IEC 61000-4-5
- Square Outline

Agency Approvals

AGENCY	AGENCY FILE NUMBER
	E341061

Product Characteristics

Materials	Dull Tin-plated
Product Marking	Without
Storage and Operational Temperature	-40 to +90°C
Weight	~180mg

Applications

- Communication equipment
- CATV equipment
- Test equipment
- Data lines
- Power supplies
- Telecom SLIC protection
- Broadband equipment
- ADSL equipment, including ADSL2+
- XDSL equipment
- Satellite and CATV equipment
- General telecom equipment
- ESD protection

@SOCAY Electronics Co., Ltd. 2013
Specifications are subject to change without notice.
Please refer to www.socay.com for current information.

Surface Mount 2-Electrode Gas Discharge Tube (GDT)

UN1812 Series

Device Dimensions (Unit: mm)

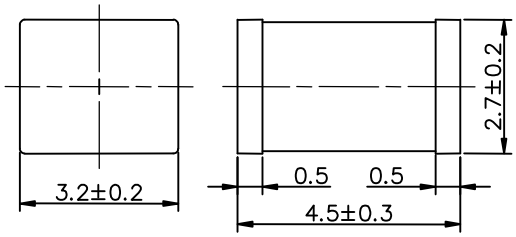

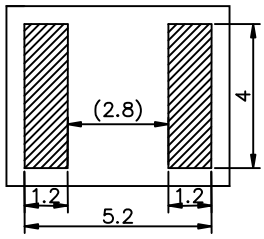

Recommended pad outline

Electrical Characteristics

Part Number	DC Spark-over Voltage	Maximum Impulse Spark-over Voltage		Minimum Insulation Resistance	Maximum Capacitance	Arc Voltage	Nominal Impulse Discharge Current
	@100V/S	@100V/μs	@1KV/μs		@1MHz	@1A	@8/20μs ±5 times
UN1812-90CSMD	90V±20%	600V	700V	1 GΩ (at 50V DC)	1.0pF	~15V	2 KA
UN1812-150CSMD	150V±20%	600V	700V	1 GΩ (at 50V DC)	1.0pF	~15V	2 KA
UN1812-200CSMD	200V±20%	600V	750V	1 GΩ (at 100V DC)	1.0pF	~15V	2 KA
UN1812-230CSMD	230V±20%	600V	750V	1 GΩ (at 100V DC)	1.0pF	~15V	2 KA
UN1812-300CSMD	300V±20%	800V	900V	1 GΩ (at 100V DC)	1.0pF	~15V	2 KA
UN1812-350CSMD	350V±20%	800V	900V	1 GΩ (at 100V DC)	1.0pF	~15V	2 KA
UN1812-400CSMD	400V±20%	900V	1000V	1 GΩ (at 100V DC)	1.0pF	~15V	2 KA
UN1812-470CSMD	470V±20%	900V	1000V	1 GΩ (at 100V DC)	1.0pF	~15V	2 KA
UN1812-600CSMD	600V±20%	1100V	1200V	1 GΩ (at 100V DC)	1.0pF	~15V	2 KA

Notes:

1. Terms in accordance with ITU-T K.12 and GB/T 9043-2008
2. At delivery AQL 0.65 level Ⅱ, DIN ISO 2859

@SOCAY Electronics Co., Ltd. 2013
Specifications are subject to change without notice.
Please refer to www.socay.com for current information.

Surface Mount 2-Electrode Gas Discharge Tube (GDT)

UN1812 Series

Electrical Rating

Item	Test Condition / Description	Requirement
DC Spark-over Voltage	The voltage is measured with a slowly rate of rise dv / dt=100V/s	To meet the specified value
Impulse Spark-over Voltage	The maximum impulse spark-over voltage is measured with a rise time of dv / dt=100V//μs or 1KV/μs	
Insulation Resistance	The resistance of gas tube shall be measured each terminal each other terminal, please see above spec.	
Capacitance	The capacitance of gas tube shall be measured each terminal to each other terminal. Test frequency :1MHz	
Nominal Impulse Discharge Current	The maximum current applying a waveform of 8/20μs that can be applied across the terminals of the gas tube. One hour after the test is completed, re-testing of the DC spark-over voltage does not exceed ±30% of the nominal DC spark-over voltage. Dwell time between pulses is 3 minutes. 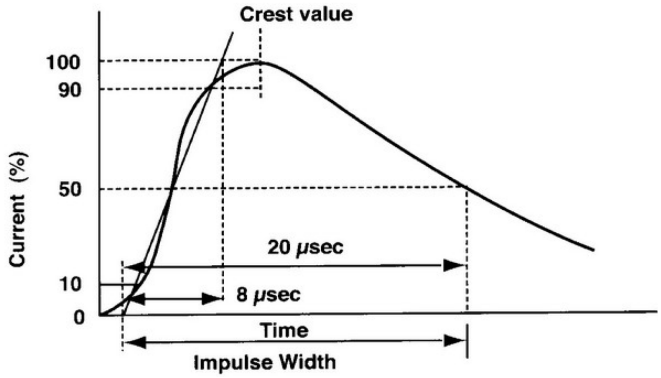	

Recommended soldering profile

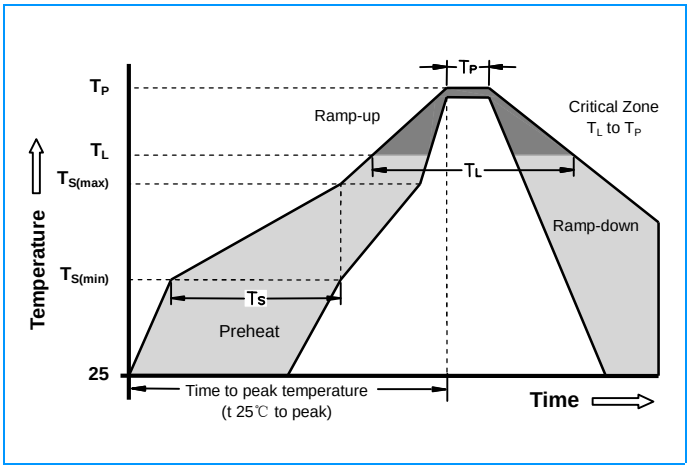

Reflow Condition		Pb - Free assembly
Pre Heat	-Temperature Min ($T_{s(min)}$)	150°C
	-Temperature Max ($T_{s(max)}$)	200°C
	- Time (min to max) (t_s)	60 -180 Seconds
Average ramp up rate (Liquidus Temp T_L) to peak		3°C/second max
$T_{S(max)}$ to TL - Ramp-up Rate		5°C/second max
Reflow	- Temperature (T_L) (Liquidus)	217°C
	- Time (min to max) (t_s)	60 -150 Seconds
Peak Temperature (T_P)		260 +0/-5°C
Time within 5°C of actual peak Temperature (t_p)		10 - 30 Seconds
Ramp-down Rate		6°C/second max
Time 25°C to peak Temperature (T_P)		8 minutes Max
Do not exceed		260°C

@SOCAY Electronics Co., Ltd. 2013
Specifications are subject to change without notice.
Please refer to www.socay.com for current information.

Surface Mount 2-Electrode Gas Discharge Tube (GDT)

UN1812 Series

Part Numbering

UN1812 – XXX C SMD

- SMD, Surface Mount
- 8/20μs Level C, 2KA
- Nominal DC Spark-over Voltage
  - 150 = 150V
  - 200 = 200V
  - 350 = 350V
  - 400 = 400V
- Series

Tape and Reel Dimensions Unit: mm

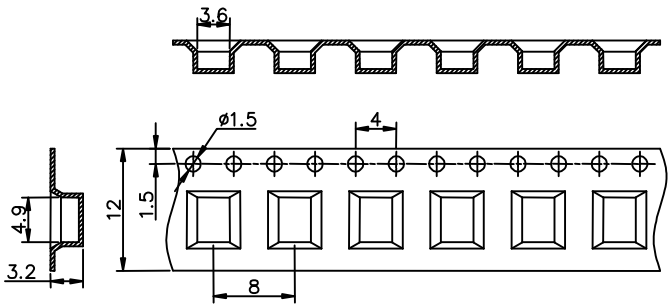

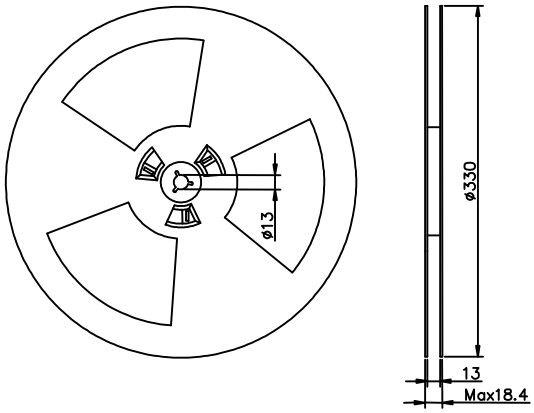

Packaging

Part Number	Description	Quantity
UN1812-XXXCSMD	12mm Tape & 13″ Reel	2500

Cautions and warnings

- Gas discharge tubes (GDT) must not be operated directly in power supply networks.
- Gas discharge tubes (GDT) may become hot in case of longer periods of current stress (danger of burning).
- Gas discharge tubes (GDT) may be used only within their specified values. In the event of overload, the head contacts may fail or the component may be destroyed.
- Damaged Gas discharge tubes (GDT) must not be re-used.

@SOCAY Electronics Co., Ltd. 2013
Specifications are subject to change without notice.
Please refer to www.socay.com for current information.