Online data sheet



UM30-211111

UM30

ULTRASONIC SENSORS

SICK
Sensor Intelligence.



Ordering information

Type	Part no.
UM30-211111	6037660

Other models and accessories ➜ www.sick.com/UM30

Detailed technical data

Performance

Working range, limiting range	30 mm ... 250 mm, 350 mm
Resolution	≥ 0.18 mm
Repeatability	± 0.15 % [1]
Accuracy	± 1 % [1] [2]
Temperature compensation	✓
Response time	50 ms
Switching frequency	11 Hz
Output time	8 ms
Ultrasonic frequency (typical)	320 kHz
Detection area (typical)	See diagrams
Additional function	Set switching mode: Distance to object (DtO) / Window (Wnd) / Object between sensor and background (ObSB), teach-in of switching output, set levels of switching outputs, Invertable switching output, set on delay switching output, temperature compensation, synchronization of up to 10 sensors, multiplexing: no cross talk of up to 10 sensors, set measurement filters: value filter, filter strength, adjustable sensitivity, foreground suppression and detection area, switch-off display, reset to factory default [3]

[1] Referring to current measurement value.
[2] Temperature compensation can be switched off, without temperature compensation: 0.17 % / K.
[3] Functions may vary depending on sensor type.

Interfaces

Switching output	1 x PNP (200 mA) [1] [2]
Multifunctional input (MF)	1 x MF
Hysteresis	3 mm

[1] Output Q short-circuit protected.
[2] PNP: HIGH = V_S - (< 2 V) / LOW = 0 V.

Mechanics/electronics

Supply voltage V_S	DC 9 V ... 30 V [1) 2)]
Power consumption	≤ 2.4 W [3)]
Initialization time	< 300 ms
Design	Cylindrical
Housing material	Nickel-plated brass, PBT Display: TPU Ultrasonic transducer: polyurethane foam, glass epoxy resin
Connection type	Male connector, M12, 5-pin
Indication	LED display, 2 x LED
Weight	150 g
Sending axis	Straight

1) Limit values, reverse-polarity protected, operation in short-circuit protected network: max. 8 A.
2) 15 V ... 30 V when using the analog voltage output.
3) Without load.

Ambient data

Enclosure rating	IP 67
Protection class	III
Ambient temperature	Operation: –25 °C ... +70 °C Storage: –40 °C ... +85 °C

Dimensional drawing (Dimensions in mm (inch))

UM30-211, UM30-212, UM30-213

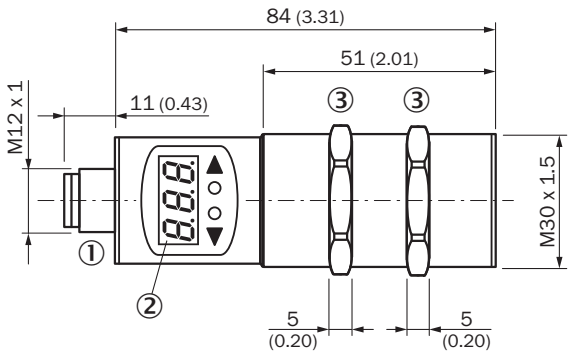

① Connection
② Display
③ Mounting nuts, SW 36 mm

Connection type

Male connector M12, 5-pin



Connection diagram

UM30-21x111 UM30-21x114 Connector M12, 5-pin

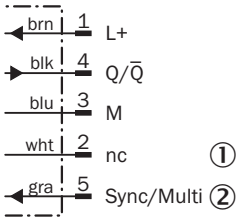

① Not assigned
② Synchronization and multiplex operation/communication Connect+

Adjustment possible

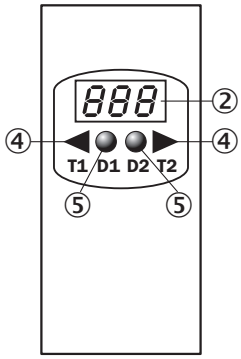

② Display
④ Operating elements
⑤ Status indicators

Detection area

UM30-211

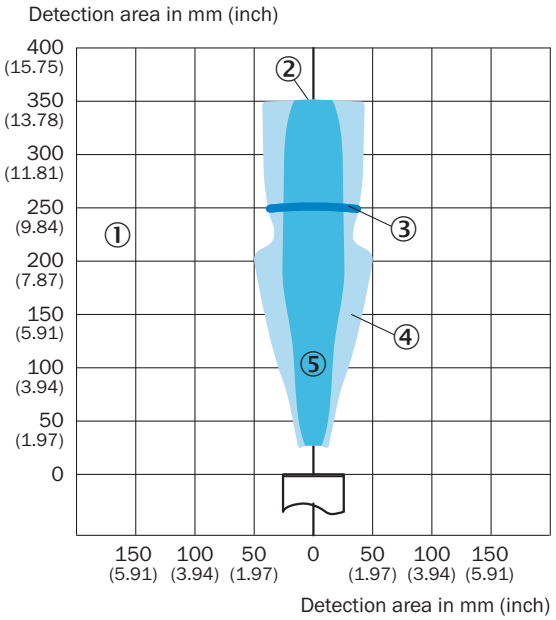

① Sensing range dependent on reflection properties, size and orientation of the object
② Limiting range
③ Working range
④ Example object: aligned plate 500 mm x 500 mm
⑤ Example object: pipe with 10 mm diameter

Recommended accessories

Other models and accessories ➜ www.sick.com/UM30

	Brief description	Type	Part no.
Mounting brackets and mounting plates			
	Mounting plate for M30 sensors, steel, zinc coated, without mounting hardware	BEF-WG-M30	5321871
	Mounting bracket, M30 thread, steel, zinc coated, without mounting hardware	BEF-WN-M30	5308445
Terminal and alignment brackets			
	Mounting bracket, M30, axial rotation possible, with threaded mounting hole M6, without mounting hardware	BEF-HA-M30A	5311527
Plug connectors and cables			
	Head A: female connector, M12, 5-pin, straight Head B: cable Cable: PVC, unshielded, 2 m	DOL-1205-G02M	6008899

	Brief description	Type	Part no.
	Head A: female connector, M12, 5-pin, angled Head B: cable Cable: PVC, unshielded, 2 m	DOL-1205-W02M	6008900
Programming and configuration tools			
	Tool for visualization, configuration and cloning, 3-digit LED display, supply voltage: DV 9 V ... 30 V	Connect+ adapter (CPA)	6037782

SICK AT A GLANCE

SICK is one of the leading manufacturers of intelligent sensors and sensor solutions for industrial applications. A unique range of products and services creates the perfect basis for controlling processes securely and efficiently, protecting individuals from accidents and preventing damage to the environment.

We have extensive experience in a wide range of industries and understand their processes and requirements. With intelligent sensors, we can deliver exactly what our customers need. In application centers in Europe, Asia and North America, system solutions are tested and optimized in accordance with customer specifications. All this makes us a reliable supplier and development partner.

Comprehensive services complete our offering: SICK LifeTime Services provide support throughout the machine life cycle and ensure safety and productivity.

For us, that is “Sensor Intelligence.”

WORLDWIDE PRESENCE:

Contacts and other locations –www.sick.com