ULN2804

LINEAR INTEGRATED CIRCUIT

EIGHT HIGH VOLTAGE, HIGH CURRENT DARLINGTON ARRAYS

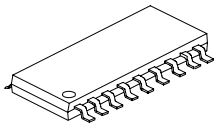

SOP-18

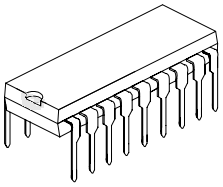

DIP-18

*Pb-free plating product number: ULN2804L

■ DESCRIPTION

The **ULN2804** is a high voltage, high current Darlington array comprised of eight NPN Darlington pairs. The device features open-collector outputs with suppression diodes for inductive loads and is ideally suited for interfacing between low-level logic circuitry and high power loads. Typical loads including relays DC motors, filament lamps, LED displays, printer hammers and high power buffers.

■ FEATURE

* Eight Darlingtons with common emitters
* TTL, PMOS or CMOS Compatible inputs
* Peak output current to 500mA
* Output voltage to 50V
* Clamp diodes for transient suppression

■ ORDERING INFORMATION

Order Number		Package	Packing
Normal	Lead Free Plating		
ULN2804-D18-T	ULN2804L-D18-T	DIP-18	Tube
ULN2804-S18-R	ULN2804L-S18-R	SOP-18	Tape Reel
ULN2804-S18-T	ULN2804L-S18-T	SOP-18	Tube

ULN2804L-D18-T (1)Packing Type (2)Package Type (3)Lead Plating	(1) R: Tape Reel, T: Tube (2) D18: DIP-18, S18: SOP-18 (3) L: Lead Free Plating, Blank: Pb/Sn

Copyright © 2005 Unisonic Technologies Co., Ltd

■ PIN CONFIGURATIONS

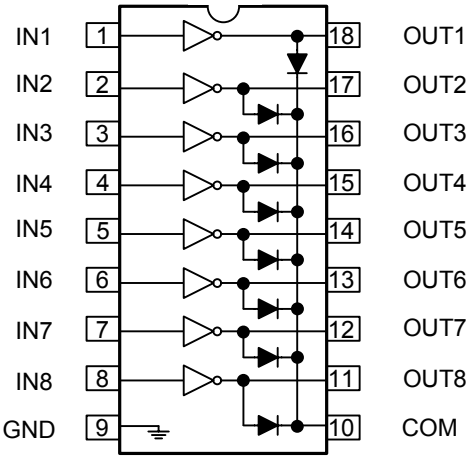

■ SCHEMATICS

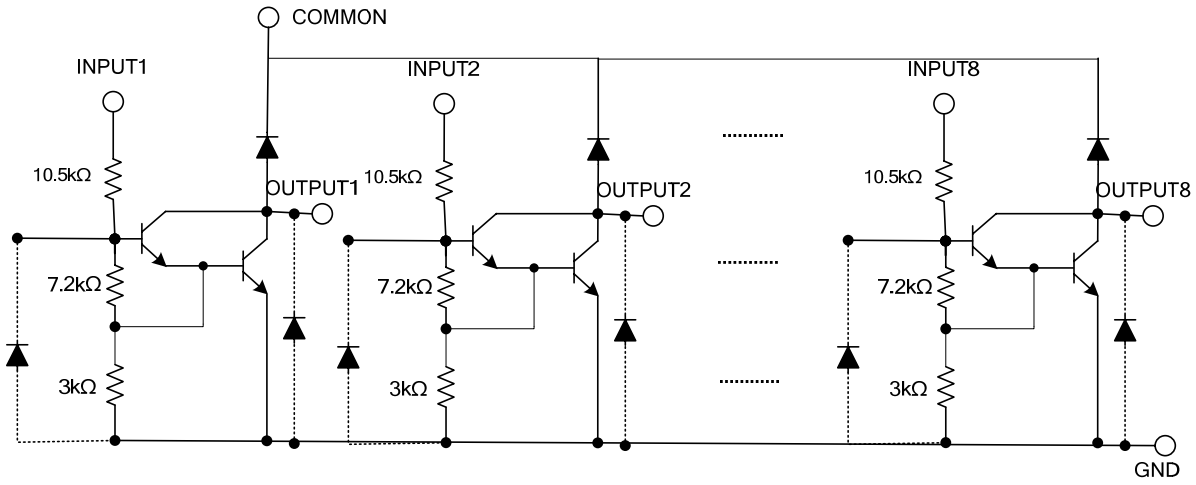

■ ABSOLUTE MAXIMUM RATINGS

PARAMETER		SYMBOL	RATINGS	UNIT
Input Voltage		V_{IN}	30	V
Output Voltage		V_{OUT}	50	V
Collector Current – Continuous		I_C	500	mA
Base Current – Continuous		I_B	25	mA
Power Dissipation	DIP-18	P_D	1.5	W
	SOP-18		0.95	W
Junction Temperature		T_J	+120	°C
Operating Ambient Temperature		T_{OPR}	0 ~ +70	°C
Storage Temperature		T_{STG}	-55 ~ +150	°C

Note Absolute maximum ratings are those values beyond which the device could be permanently damaged. Absolute maximum ratings are stress ratings only and functional device operation is not implied

■ THERMAL DATA

PARAMETER		SYMBOL	RATING	UNIT
Thermal resistance from junction to Ambient	DIP-18	θ_{JA}	60	°C /W
	SOP-18		80	°C /W

■ ELECTRICAL CHARACTERISTICS (Ta = 25°C, unless otherwise specified.)

PARAMETER		SYMBOL	TEST FIGURE	TEST CONDITIONS		MIN	TYP	MAX	UNIT
Collector-Emitter Saturation Voltage		$V_{CE(SAT)}$	1	I_{OUT}=350mA, I_{IN}=500μA			1.3	1.6	V
				I_{OUT}=200mA, I_{IN}=350μA			1.1	1.3	V
				I_{OUT}=100mA,I_{IN}=250μA			0.9	1.1	V
Input Voltage		$V_{IN(ON)}$	2	V_{CE}=2.0V	I_{OUT}=125mA			5.0	V
					I_{OUT}=200mA			6.0	V
					I_{OUT}=275mA			7.0	V
					I_{OUT}=350mA			8.0	V
Clamp Diode Forward Voltage		V_F	3	I_F=350mA			1.5	2.0	V
Output Leakage Current		I_{CEX}	4a	V_{OUT}=50V,Ta=70°C				100	μA
			4b	V_{OUT}=50V,Ta=70°C,V_{IN} =1.0V				500	
Input Current	ON	$I_{IN(ON)}$	5	V_{IN} =5V			0.35	0.5	mA
				V_{IN} =12V			1.0	1.45	mA
	OFF	$I_{IN(OFF)}$	6	I_{OUT}=500μA, Ta=70°C		50	100		μA
Clamp Diode Reverse Current		I_R	7	V_R=50V, Ta=25°C				50	μA
				V_R=50V, Ta=70°C				100	μA
DC Current Gain		h_{FE}		V_{OUT}=2V, I_{OUT}=350mA		1000			
Input Capacitance		C_{IN}					15	25	pF
Turn-On Delay		t_{ON}	8				0.25	1	μS
Turn-Off Delay		t_{OFF}	8				0.25	1	μS

■ TEST FIGURES

Figure 1.

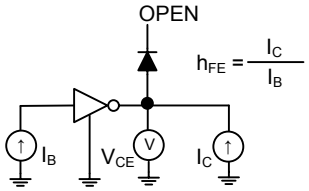

Figure 2.

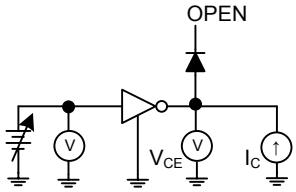

Figure 3.

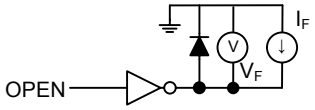

Figure 4a.

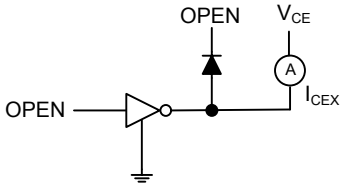

Figure 4b.

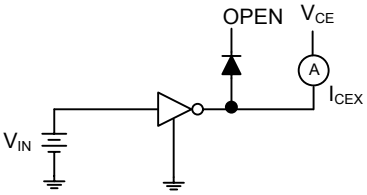

Figure 5.

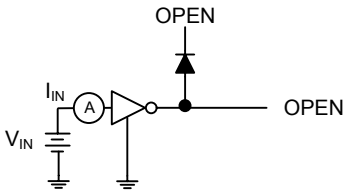

Figure 6.

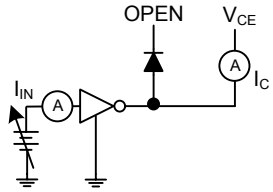

Figure 7.

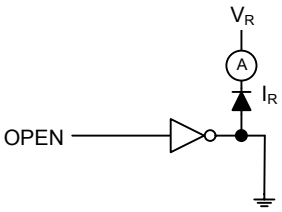

Figure 8.

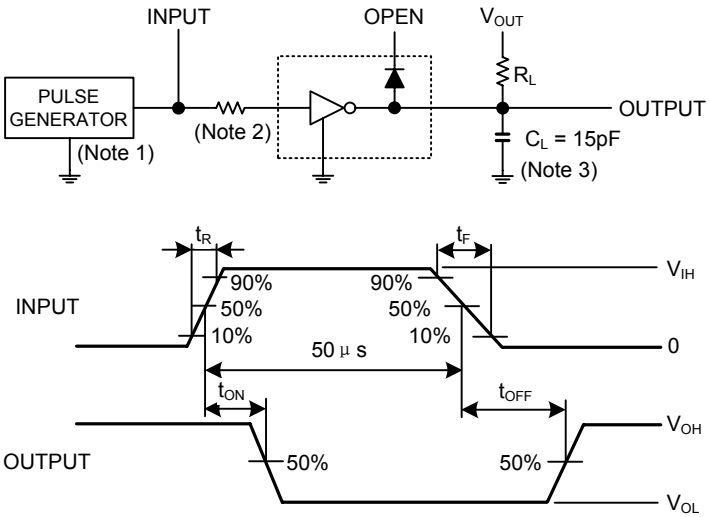

Note1: Pulse width 50μs, duty cycle 10%
Output impedance 50Ω, t_R≤5ns, t_F≤10ns
Note2: R1: 0, V_{IH}: 3V
Note3: C_L includes probe and jig capacitance.

■ TYPICAL CHARACTERISTICS

Output Current vs. Saturation Voltage

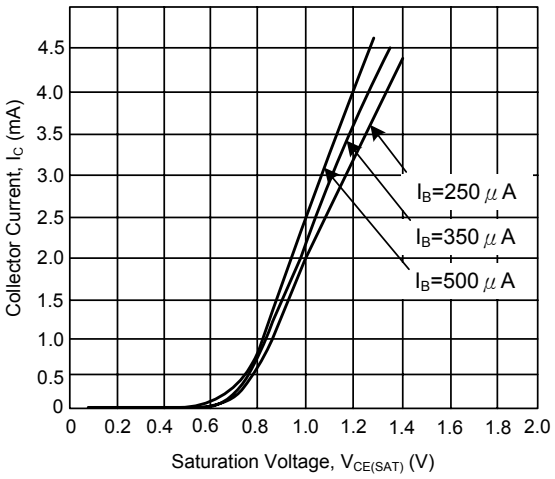

Output Current vs. Input Current

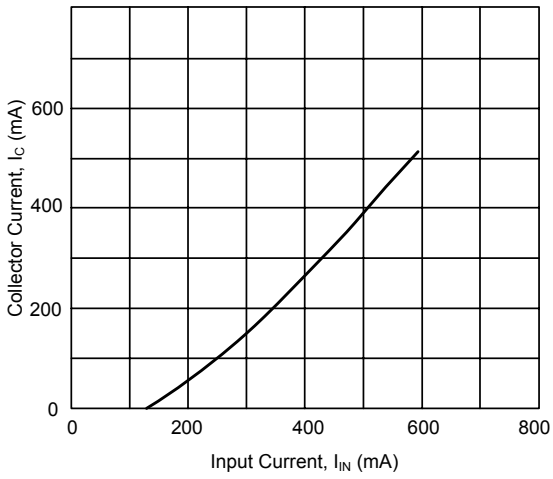

Input Current vs. Input Voltage

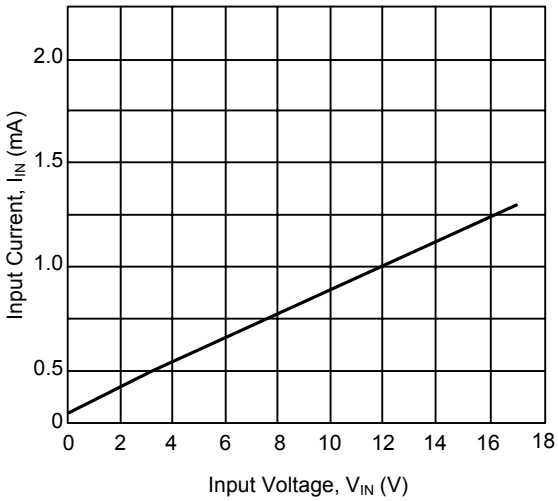

Power Dissipation vs. Ambient Temperature

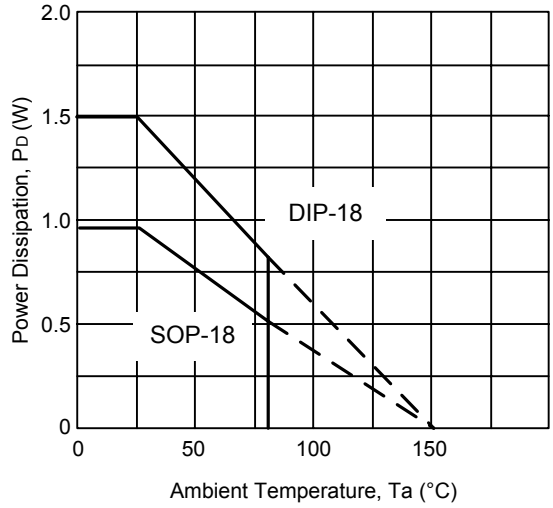

UTC assumes no responsibility for equipment failures that result from using products at values that exceed, even momentarily, rated values (such as maximum ratings, operating condition ranges, or other parameters) listed in products specifications of any and all UTC products described or contained herein. UTC products are not designed for use in life support appliances, devices or systems where malfunction of these products can be reasonably expected to result in personal injury. Reproduction in whole or in part is prohibited without the prior written consent of the copyright owner. The information presented in this document does not form part of any quotation or contract, is believed to be accurate and reliable and may be changed without notice.