CONSTANT CUTTENT BOOST CONTROLLER FOR DRIVING HIGH POWER LEDS

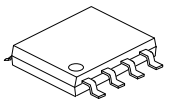

SOP-8

■ DESCRIPTION

The UTC **ULC6001** is a high powered PWM boost converter optimized for constant current applications such as driving one or more strings of high power LEDs.

The output current can be set by an external resistor connected the FB pin and GND. This average current can be reduced by applying a PWM signal to the EN pin.

■ FEATURES

* Large Input voltage range: 5V~400V
* Programmable LED drive current
* Programmable switching frequency: 500KHz~2.5MHz
* Single pin for PWM dimming
* Accurate over the -40~125°C temperature range

■ ORDERING INFORMATION

Ordering Number		Package	Packing
Lead Free	Halogen Free		
ULC6001L-S08-R	ULC6001G-S08-R	SOP-8	Tape Reel

ULC6001G-S08-R (1)Packing Type (2)Package Type (3)Green Package	(1) R: Tape Reel (2) S08: SOP-8 (3) G: Halogen Free and Lead Free, L: Lead Free

■ MARKING

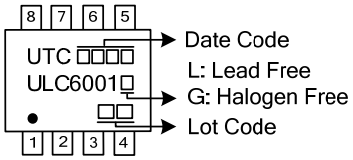

Copyright © 2017 Unisonic Technologies Co., Ltd

■ PIN CONFIGURATION

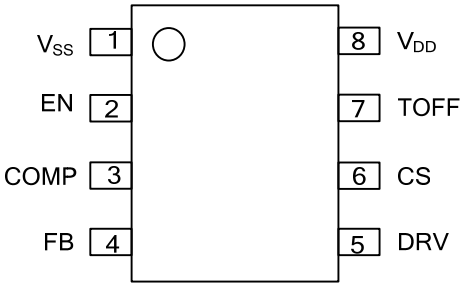

■ PIN DESCRIPTION

PIN NO.	PIN NAME	DESCRIPTION
1	V_{SS}	Ground.
2	EN	Dimming PWM Control Pin.
3	COMP	Error Amp Output Pin.
4	FB	Output Feedback Pin.
5	DRV	Drive Output. Connect to the gate of external FET.
6	CS	Current Sense Pin.
7	TOFF	Off Time Control Pin.
8	V_{DD}	Power Pin

■ BLOCK DIAGRAM

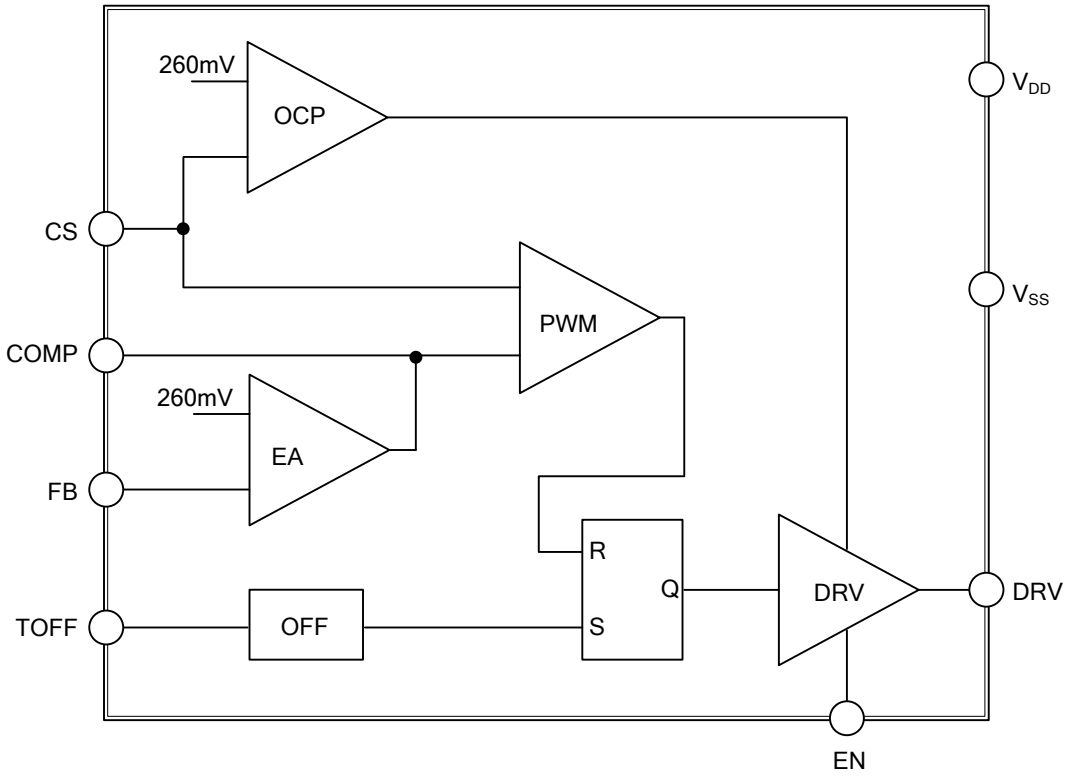

■ ABSOLUTE MAXIMUM RATING

PARAMETER	SYMBOL	RATINGS	UNIT
Voltage	V_{MAX}	8	V
	$V_{MIN-MAX}$	-0.3 ~ V_{DD}+0.3	V
Temperature	$T_{MIN-MAX}$	-20 ~ +85	°C
	$T_{STORAGE}$	-40 ~ +165	°C

Note: Absolute maximum ratings are those values beyond which the device could be permanently damaged. Absolute maximum ratings are stress ratings only and functional device operation is not implied.

■ ELECTRICAL CHARACTERISTICS

PARAMETER	SYMBOL	TEST CONDITIONS	MIN	TYP	MAX	UNIT
Supply Voltage Range	V_{DD}		3.0		6.5	V
CS Feedback Voltage	V_{CS}			260		mV
FB Feedback Voltage	V_{FB}			260		mV
Quiescent Current	I_{DD}			0.5	1	mA
OFF TIME	T_{OFF0}	TOFF Connect with nothing		700		ns
Shutdown Current	I_{DDQ}				1	uA
Enable Threshold H	V_{ENH}		2.0			V
Enable Threshold L	V_{ENL}				0.7	V
DRV Rise Time	T_{RISE}	by 500pF capacitor		25		ns
DRV Fall Time	T_{FALL}	by 500pF capacitor		25		ns

■ TYPICAL APPLICATION CIRCUIT

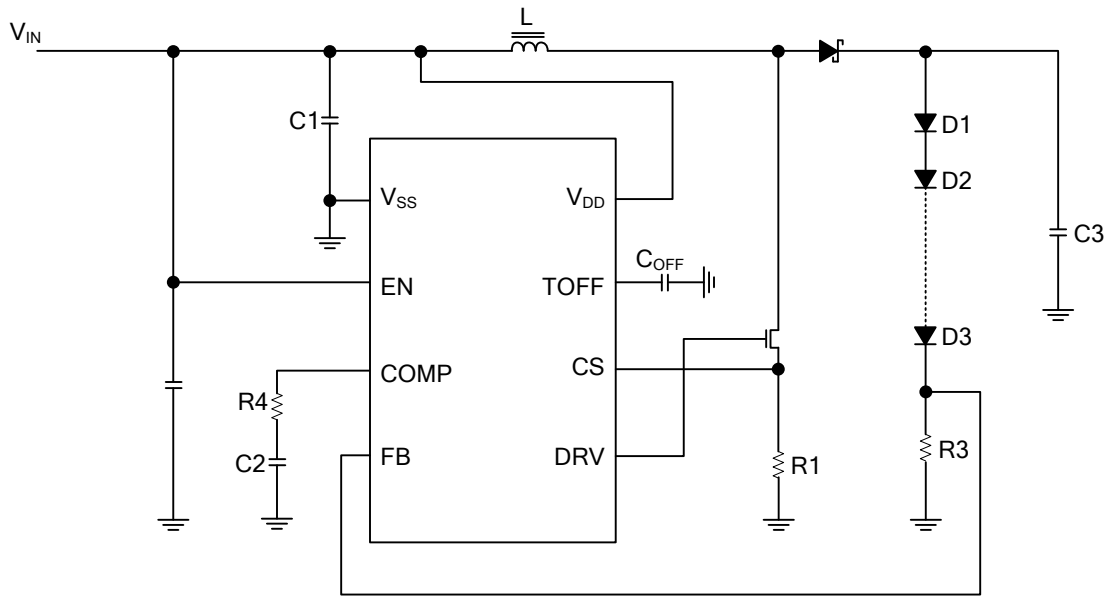

UTC assumes no responsibility for equipment failures that result from using products at values that exceed, even momentarily, rated values (such as maximum ratings, operating condition ranges, or other parameters) listed in products specifications of any and all UTC products described or contained herein. UTC products are not designed for use in life support appliances, devices or systems where malfunction of these products can be reasonably expected to result in personal injury. Reproduction in whole or in part is prohibited without the prior written consent of the copyright owner. The information presented in this document does not form part of any quotation or contract, is believed to be accurate and reliable and may be changed without notice.