HIGH ACCURACY LINEAR CONSTANT CURRENT LED DRIVER

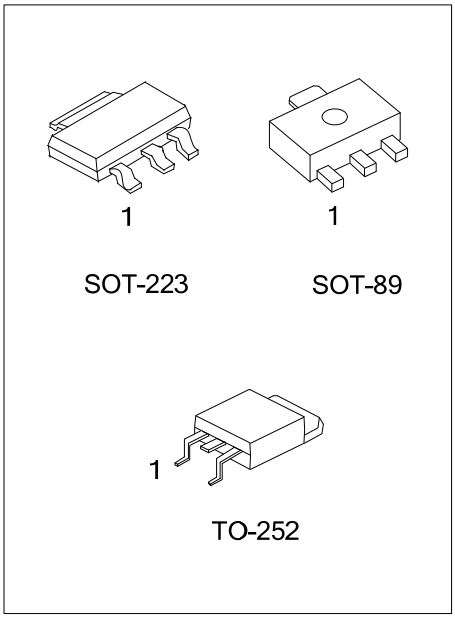

■ DESCRIPTION

The UTC **UL66D** is a linear constant current IC with a built-in power MOSFET. The output current can be adjusted from 5mA to 100mA, and constant current accuracy up to ± 4%. The application scheme is simple and the cost is low. This device also incorporates temperature compensation and thermal shutdown functions.

■ FEATURES

* 5mA ~ 100mA Output Current
* Up to ± 4% Constant Current Accuracy
* No EMC Problem
* Temperature Compensate
* Thermal Shutdown

■ ORDERING INFORMATION

Ordering Number		Package	Packing
Lead Free	Halogen Free		
UL66DL-xx-AA3-R	UL66DG-xx-AA3-R	SOT-223	Tape Reel
UL66DL-xx-AB3-R	UL66DG-xx-AB3-R	SOT-89	Tape Reel
UL66DL-xx-TN3-R	UL66DG-xx-TN3-R	TO-252	Tape Reel

Note: xx: Output Voltage, refer to Marking Information.

UL66DG-xx-AA3-R (1)Packing Type (2)Package Type (3)Output Voltage Code (4)Green Package	(1) R: Tape Reel (2) AA3: SOT-223, AB3: SOT-89, TN3: TO-252 (3) xx: Refer to Marking Information (4) G: Halogen Free and Lead Free, L: Lead Free

Copyright © 2018 Unisonic Technologies Co., Ltd

■ MARKING INFORMATION

PACKAGE	VOLTAGE CODE	MARKING
SOT-223	03: 0.3V 06: 0.6V	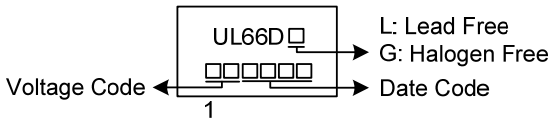
SOT-89		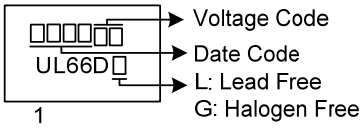
TO-252		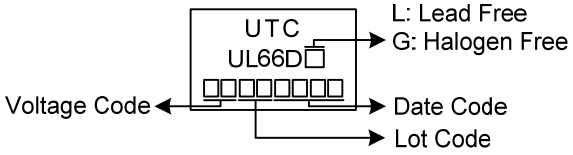

■ PIN DESCRIPTION

PIN NO.	PIN NAME	DESCRIPTION
1	OUT	Current Output Pin.
2	GND	Ground.
3	REXT	Output Current Setting Pin.

■ BLOCK DIAGRAM

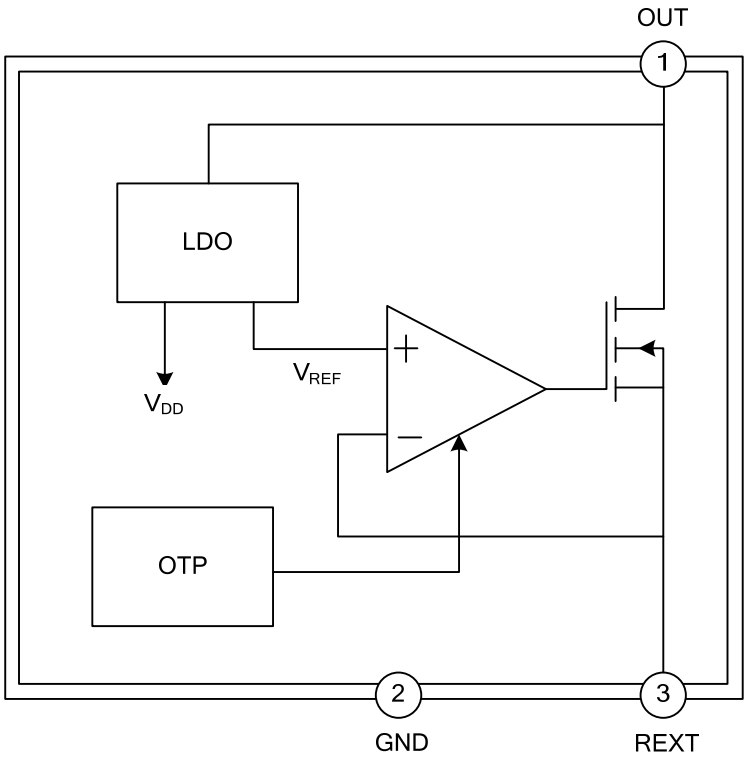

■ ABSOLUTE MAXIMUM RATING

PARAMETER	SYMBOL	RATINGS	UNIT
OUT Pin Voltage	V_{OUT}	-0.5 ~ 500	V
OUT Pin Current	I_{OUT}	5 ~ 100	mA
Operating Junction Temperature	T_{OPT}	-40 ~ +150	°C
Storage Junction Temperature	T_{STG}	-50 ~ +150	°C

Note: Absolute maximum ratings are those values beyond which the device could be permanently damaged. Absolute maximum ratings are stress ratings only and functional device operation is not implied.

■ ELECTRICAL CHARACTERISTICS

PARAMETER	SYMBOL	TEST CONDITIONS	MIN	TYP	MAX	UNIT
OUT Pin Voltage	V_{OUT}	I_{OUT}=30mA	6.5			V
OUT Pin Withstanding Voltage		I_{OUT}=0	500			V
Output Current	I_{OUT}		5		100	mA
Quiescent Current	I_Q	V_{OUT}=10V REXT No Collection		0.16	0.25	mA
REXT Pin Voltage	V_{REXT}	V_{OUT}=10V		0.3		V
				0.6		V
Output Current Error		I_{OUT}=5~100mA		± 4		%
Temperature Compensate Point	T_{CP}			140		°C

■ TYPICAL APPLICATION CIRCUIT

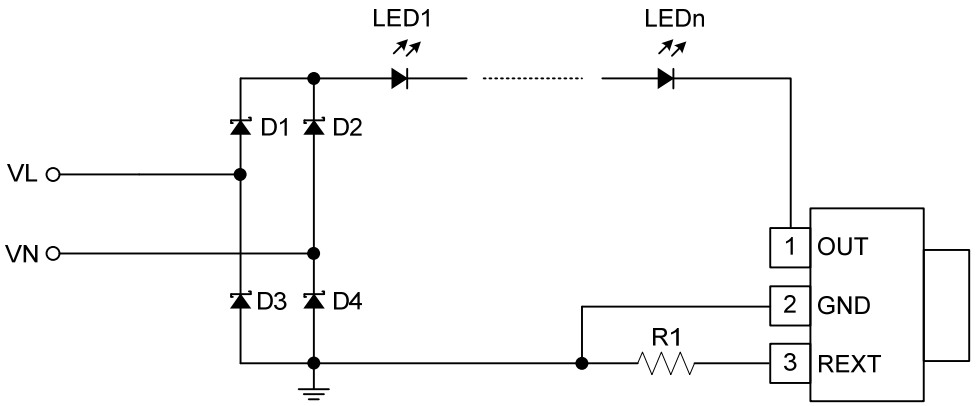

UTC assumes no responsibility for equipment failures that result from using products at values that exceed, even momentarily, rated values (such as maximum ratings, operating condition ranges, or other parameters) listed in products specifications of any and all UTC products described or contained herein. UTC products are not designed for use in life support appliances, devices or systems where malfunction of these products can be reasonably expected to result in personal injury. Reproduction in whole or in part is prohibited without the prior written consent of the copyright owner. UTC reserves the right to make changes to information published in this document, including without limitation specifications and product descriptions, at any time and without notice. This document supersedes and replaces all information supplied prior to the publication hereof.