HIGH POWER FACTOR LINEAR CONSTANT CURRENT LED DRIVER

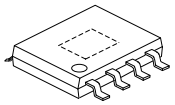

HSOP-8

■ DESCRIPTION

UTC **UL52A** is a high power factor linear constant current LED driver which is applied to LED lighting. Through the distinctive constant current control technology, it realizes that constant current accuracy is less than ±5% and output current is adjustable through external resistor. High power factor and low harmonic distortion are the particular features.

The system is simple without transformer and electrolysis capacitor. Therefore, LED lighting batch job can be realized.

■ FEATURES

* No transformer and high voltage electrolysis capacitor
* Integrated high voltage startup power supply circuit
* Adjustable output current, max 60mA
* Inter-chip current deviation < ±5%
* Efficiency: >90%
* Power factor: >0.95
* THD<20%
* Over temperature protection
* Application system no EMI problems

■ ORDERING INFORMATION

Ordering Number	Package	Packing
UL52AG-SH2-R	HSOP-8	Tape Reel

UL52AG-SH2-R (1)Packing Type (2)Package Type (3)Green Package	(1) R: Tape Reel (2) SH2: HSOP-8 (3) G: Halogen Free and Lead Free

■ MARKING

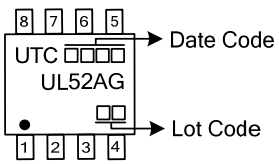

Copyright © 2015 Unisonic Technologies Co., Ltd

■ PIN CONFIGURATION

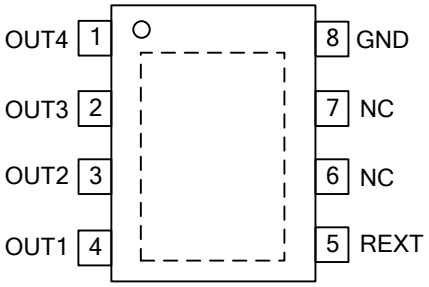

■ PIN DESCRIPTION

PIN NO.	PIN NAME	DESCRIPTION
1	OUT4	current output port 4
2	OUT3	current output port 3
3	OUT2	current output port 4
4	OUT1	Power input and constant current output port 1
5	REXT	Output current setting port
6~7	NC	
8	GND	GND

■ ABSOLUTE MAXIMUM RATING (Ambient temperature is 27°C if there is no special instruction)

PARAMETER	SYMBOL	RATINGS	UNIT
ESD Voltage Withstand	V_{ESD}	>2000	V
Operating Temperature	T_{OPR}	-20 ~ +125	°C
Storage Temperature	T_{STG}	-40 ~ +150	°C

Note: Absolute maximum ratings are those values beyond which the device could be permanently damaged. Absolute maximum ratings are stress ratings only and functional device operation is not implied.

■ ELECTRICAL CHARACTERISTICS (Ambient temperature is 27°C if there is no special instruction)

PARAMETER	SYMBOL	TEST CONDITIONS	MIN	TYP	MAX	UNIT
OUT1 Input Voltage	V_{OUT1}				6.5	V
Output Current	I_{OUT}		10		60	mA
REXT Port Voltage	V_{REXT}	V_{OUT1}=V_{OUT4}=10V		0.9		V
OUT1/ OUT2 Port Withstand Voltage	V_{DS_BV1}	I_{OUT1}=I_{OUT2}=0	450			V
OUT3/ OUT4 Port Withstand Voltage	V_{DS_BV2-4}	I_{OUT3}=I_{OUT4}=0	250			V
IOUT Accuracy	dI_{OUT}	I_{OUT}=10~50mA		±5		%
Over-Temperature Protection Point (Note 1)	TSC			120		°C

Note: When the junction temperature is over 120°C, the output current of UL52A will be reduced

■ FUNCTIONAL DESCRIPTION

UTC **UL52A** is constant current drive which integrates the functional module such as LED constant current control and OUT port high voltage drive. OUT1 port minimum input voltage is 6V (I_{OUT}=20mA) and it can reach output current 10mA ~ 60mA by external REXT resistor. Built-in LED constant current drive maintains LED current a high precision without impact of ambient temperature. The chip can achieve high efficiency and high power factor by opening four switches one by one.

The chip output current is adjustable by REXT resistor $I_{OUT}=V_{REXT}/R$. Output current generated by four switches opening one by one is shown below:

I_{OUT1}=0.56V/R
I_{OUT2}=0.73V/R
I_{OUT3}=0.87V/R
I_{OUT4}=0.94V/R

■ TYPICAL APPLICATION CIRCUIT

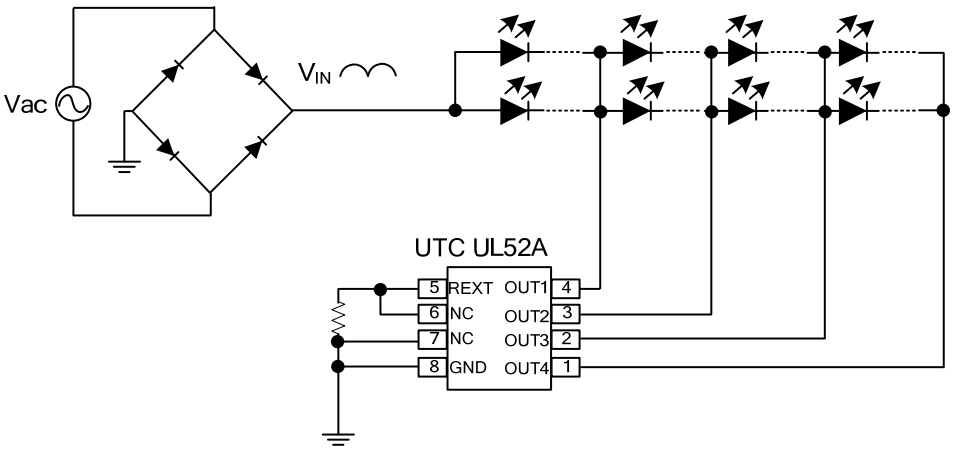

Figure 1. UTC **UL52A** Typical Schematic Circuit Diagram

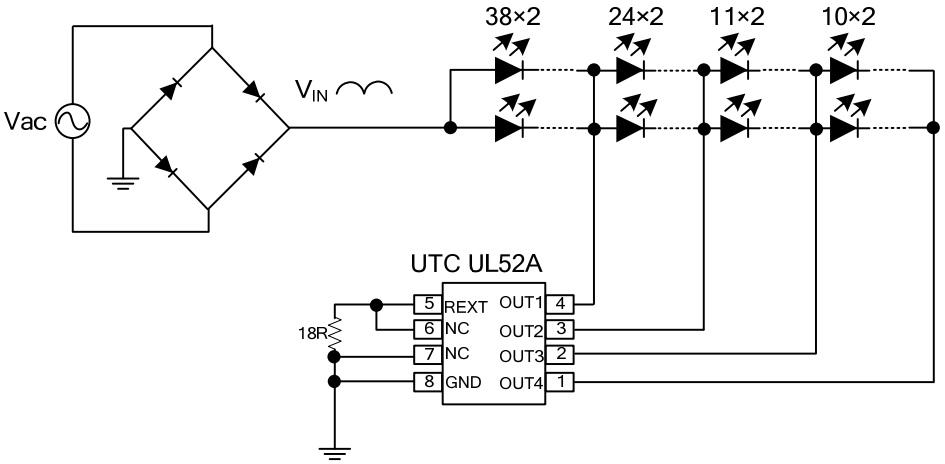

Figure 2. UTC **UL52A** Typical Application Circuit

■ TYPICAL APPLICATION CIRCUIT (Cont.)

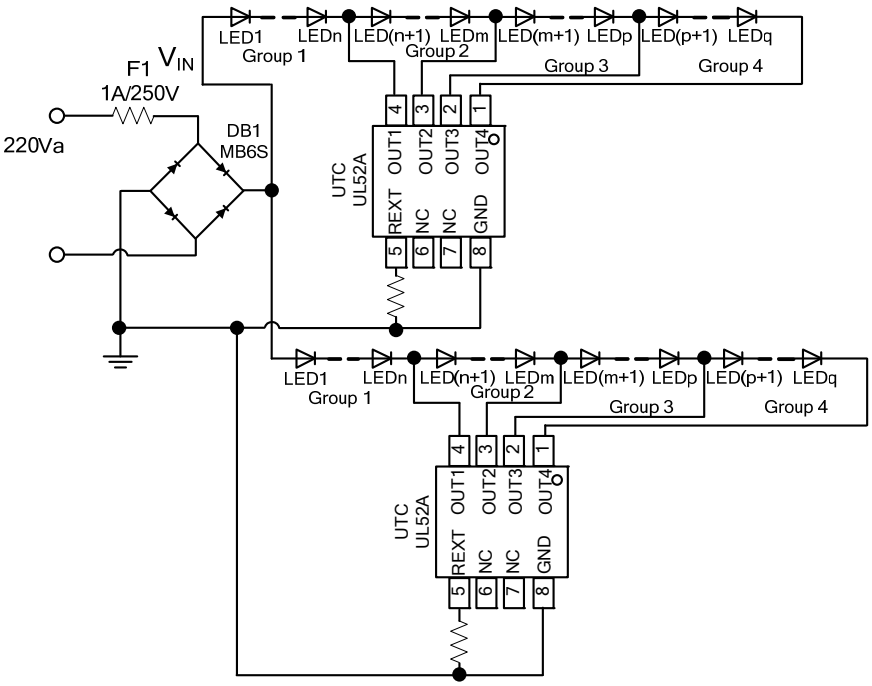

Figure 3. UTC **UL52A** Parallel Application Circuit

UTC assumes no responsibility for equipment failures that result from using products at values that exceed, even momentarily, rated values (such as maximum ratings, operating condition ranges, or other parameters) listed in products specifications of any and all UTC products described or contained herein. UTC products are not designed for use in life support appliances, devices or systems where malfunction of these products can be reasonably expected to result in personal injury. Reproduction in whole or in part is prohibited without the prior written consent of the copyright owner. The information presented in this document does not form part of any quotation or contract, is believed to be accurate and reliable and may be changed without notice.