One Technology Way • P.O. Box 9106 • Norwood, MA 02062-9106, U.S.A. • Tel: 781.329.4700 • Fax: 781.461.3113 • www.analog.com

# Evaluation Board for High Speed Op Amps Offered in 5-Lead SOT-23 and 6-Lead SOT-23 Packages

## FEATURES

**Enables quick breadboarding/prototyping**
**User-defined circuit configuration**
**Edge-mounted SMA connector provisions**
**Easy connection to test equipment and other circuits**
**RoHs compliant**

## GENERAL DESCRIPTION

The Analog Devices, Inc., 5-lead and 6-lead, SOT-23 high speed evaluation board is designed to help customers quickly prototype new op amp circuits and reduce design time. The evaluation board can be used with almost any Analog Devices op amp in various configurations and applications. The evaluation board is a bare board (that is, there are no components or amplifiers soldered to the board, these must be ordered separately). Figure 1 shows the component side of the evaluation board, and Figure 2 shows the circuit side of the evaluation board.

The evaluation board is a 2-layer PCB that accepts SMA connectors on the input and output for efficient connection to test equipment. The evaluation board can also accommodate an SMA connector for the disable pin.

The ground plane, component placement, and supply bypassing are laid out to minimize parasitic inductances and capacitances. The evaluation board components are primarily SMT 1206 case size, with the exception of the electrolytic bypass capacitors (C1, C4), which are 3528 case size.

There are two options for supply bypassing. The first is connecting additional shunt capacitors (C2, C5) in parallel with the electrolytic capacitors (C1, C4) from each supply to ground. This technique of power supply bypassing provides wideband rejection of unwanted noise on the supply lines.

The second approach to supply bypassing is to connect one capacitor (C6) between the supply rails. This method uses fewer components and can improve the PSRR at higher frequencies. Optimal bypassing is circuit dependent and therefore must be evaluated by the designer.

Figure 3 shows the evaluation board schematic. Figure 4 and Figure 6 show the evaluation board assembly drawings. The PCB layout pattern for the component side and the circuit side is shown in Figure 5 and Figure 7.

## EVALUATION BOARD, COMPONENT AND CIRCUIT SIDES




NOTES
1. THE EVALUATION BOARD SILKSCREEN PART NUMBER LABELING ON YOUR BOARD MAY BE DIFFERENT FROM WHAT IS SHOWN HERE.

08981-001

*Figure 1. Component Side of Evaluation Board*




NOTES
1. THE EVALUATION BOARD SILKSCREEN PART NUMBER LABELING ON YOUR BOARD MAY BE DIFFERENT FROM WHAT IS SHOWN HERE.

08981-002

*Figure 2. Circuit Side of Evaluation Board*

# TABLE OF CONTENTS

Features ..... 1
General Description ..... 1
Evaluation Board, Component and Circuit Sides ..... 1
Revision History ..... 2
Evaluation Board Schematic ..... 3
Evaluation Board Assembly Drawings and Layout Patterns ..... 4
Ordering Information ..... 5
Bill of Materials ..... 5

## REVISION HISTORY

**5/11—Rev. 0 to Rev. A**

Changes to User Guide Title, General Description Section, Figure 1 Caption, and Figure 2 Caption ..... 1
Changed Evaluation Board Schematic and Layout Section to Evaluation Board Schematic Section ..... 3
Changes to Figure 3 Caption ..... 3
Added Evaluation Board Assembly Drawings and Layout Patterns Section ..... 4
Changes to Figure 4 through Figure 7 ..... 4

**4/10—Revision 0: Initial Version**

# EVALUATION BOARD SCHEMATIC

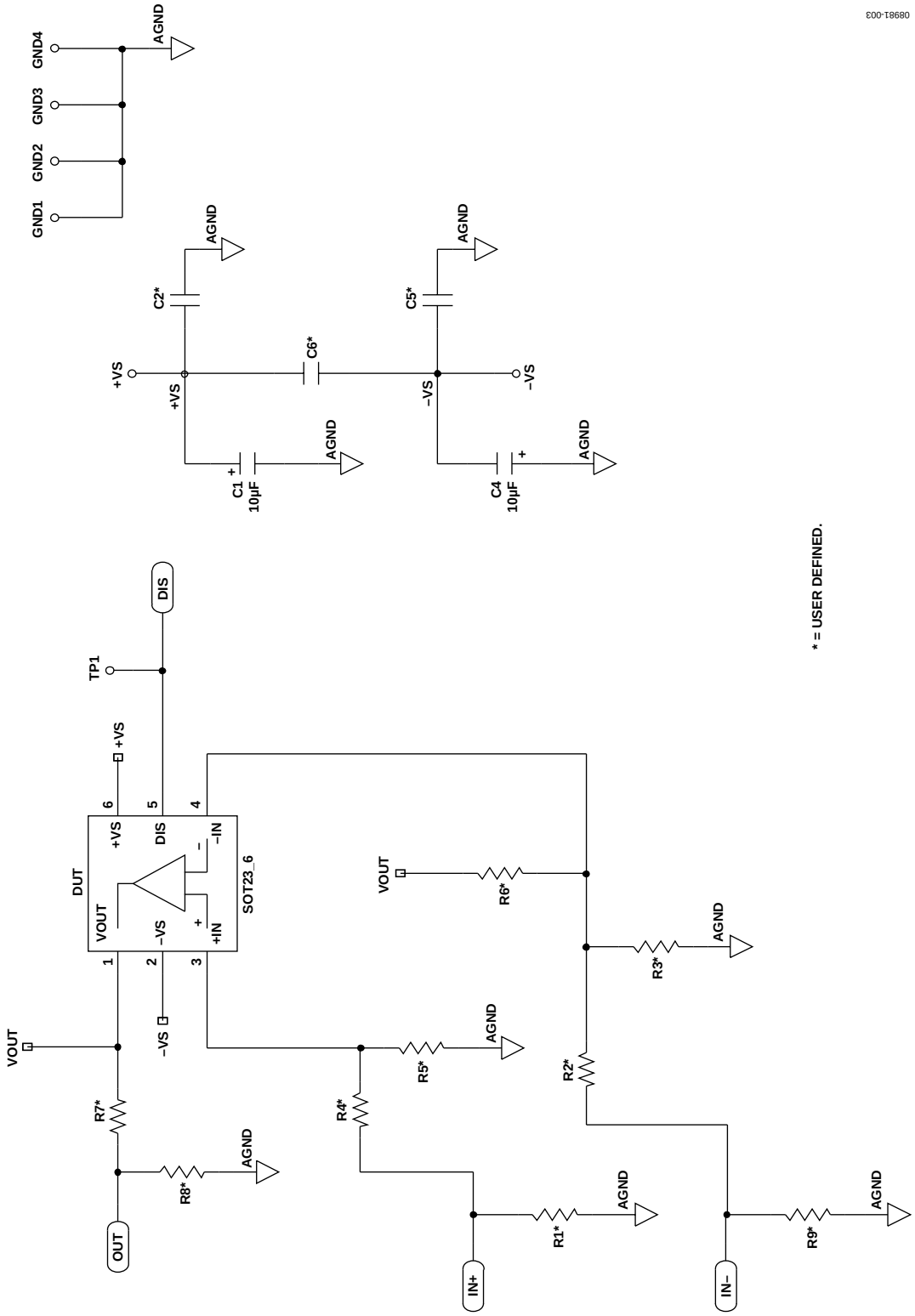


*Figure 3. 5-Lead SOT-23 and 6-Lead SOT-23 Evaluation Board Schematic*

# EVALUATION BOARD ASSEMBLY DRAWINGS AND LAYOUT PATTERNS

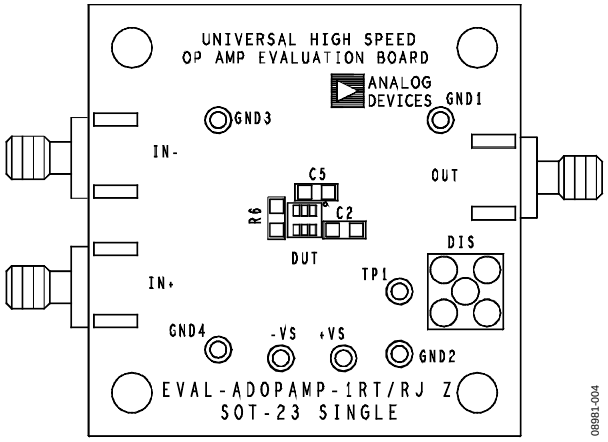


*Figure 4. Board Assembly Drawing, Component Side*

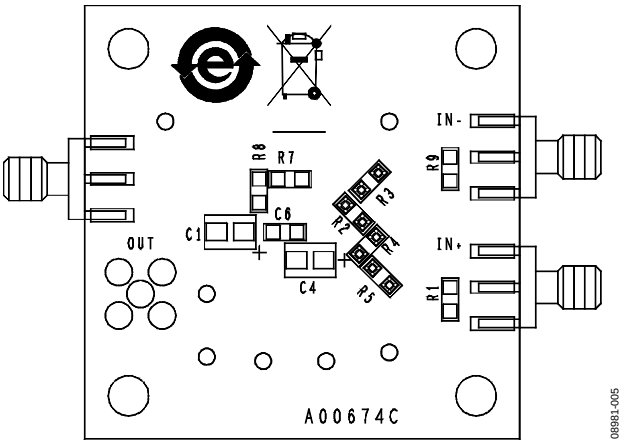


*Figure 6. Board Assembly Drawing, Circuit Side*

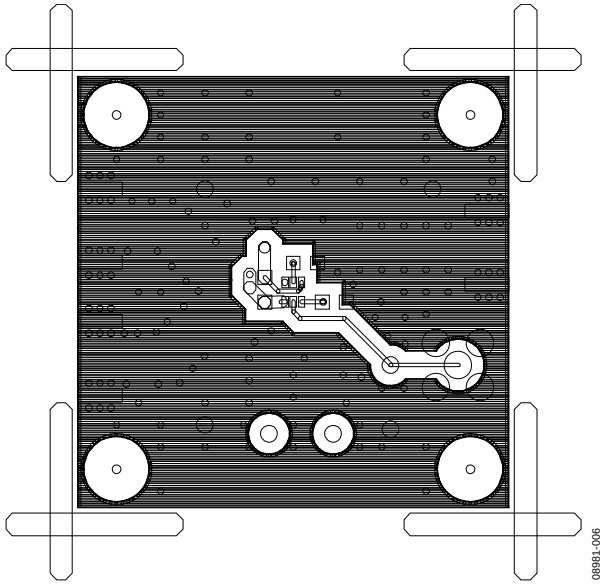


*Figure 5. Board Layout Pattern, Component Side*

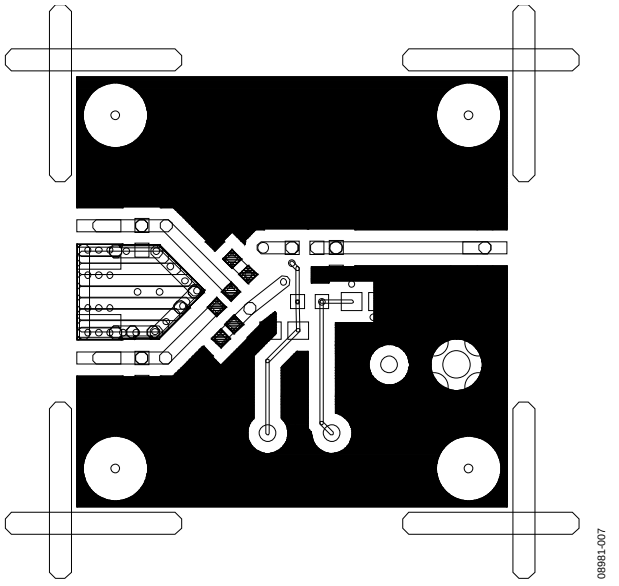


*Figure 7. Board Layout Pattern, Circuit Side*

# ORDERING INFORMATION

## BILL OF MATERIALS

**Table 1.**

| Quantity | Reference Designator | Description | Package |
|---|---|---|---|
| 7 | +VS, –VS, GND1, GND2, GND3, GND4, TP1 | Test point | TP1 |
| 2 | C1, C4 | 10 µF capacitor | C3528 |
| 3 | C2, C5, C6 | User-defined capacitor | C1206 |
| 1 | DIS | SMA_HD | SMACON |
| 1 | DUT | 5-Lead SOT-23 or 6-lead SOT-23 | SOT-23-5 or SOT-23-6 |
| 3 | IN+, IN–, OUT | SMA/SMT | SMA/SMT |
| 9 | R1 to R9 | User-defined resistor | R1206 |

## NOTES

## NOTES

# NOTES



**ESD Caution**

**ESD (electrostatic discharge) sensitive device**. Charged devices and circuit boards can discharge without detection. Although this product features patented or proprietary protection circuitry, damage may occur on devices subjected to high energy ESD. Therefore, proper ESD precautions should be taken to avoid performance degradation or loss of functionality.

**Legal Terms and Conditions**

By using the evaluation board discussed herein (together with any tools, components documentation or support materials, the "Evaluation Board"), you are agreeing to be bound by the terms and conditions set forth below ("Agreement") unless you have purchased the Evaluation Board, in which case the Analog Devices Standard Terms and Conditions of Sale shall govern. Do not use the Evaluation Board until you have read and agreed to the Agreement. Your use of the Evaluation Board shall signify your acceptance of the Agreement. This Agreement is made by and between you ("Customer") and Analog Devices, Inc. ("ADI"), with its principal place of business at One Technology Way, Norwood, MA 02062, USA. Subject to the terms and conditions of the Agreement, ADI hereby grants to Customer a free, limited, personal, temporary, non-exclusive, non-sublicensable, non-transferable license to use the Evaluation Board FOR EVALUATION PURPOSES ONLY. Customer understands and agrees that the Evaluation Board is provided for the sole and exclusive purpose referenced above, and agrees not to use the Evaluation Board for any other purpose. Furthermore, the license granted is expressly made subject to the following additional limitations: Customer shall not (i) rent, lease, display, sell, transfer, assign, sublicense, or distribute the Evaluation Board; and (ii) permit any Third Party to access the Evaluation Board. As used herein, the term "Third Party" includes any entity other than ADI, Customer, their employees, affiliates and in-house consultants. The Evaluation Board is NOT sold to Customer; all rights not expressly granted herein, including ownership of the Evaluation Board, are reserved by ADI. CONFIDENTIALITY. This Agreement and the Evaluation Board shall all be considered the confidential and proprietary information of ADI. Customer may not disclose or transfer any portion of the Evaluation Board to any other party for any reason. Upon discontinuation of use of the Evaluation Board or termination of this Agreement, Customer agrees to promptly return the Evaluation Board to ADI. ADDITIONAL RESTRICTIONS. Customer may not disassemble, decompile or reverse engineer chips on the Evaluation Board. Customer shall inform ADI of any occurred damages or any modifications or alterations it makes to the Evaluation Board, including but not limited to soldering or any other activity that affects the material content of the Evaluation Board. Modifications to the Evaluation Board must comply with applicable law, including but not limited to the RoHS Directive. TERMINATION. ADI may terminate this Agreement at any time upon giving written notice to Customer. Customer agrees to return to ADI the Evaluation Board at that time. LIMITATION OF LIABILITY. THE EVALUATION BOARD PROVIDED HEREUNDER IS PROVIDED "AS IS" AND ADI MAKES NO WARRANTIES OR REPRESENTATIONS OF ANY KIND WITH RESPECT TO IT. ADI SPECIFICALLY DISCLAIMS ANY REPRESENTATIONS, ENDORSEMENTS, GUARANTEES, OR WARRANTIES, EXPRESS OR IMPLIED, RELATED TO THE EVALUATION BOARD INCLUDING, BUT NOT LIMITED TO, THE IMPLIED WARRANTY OF MERCHANTABILITY, TITLE, FITNESS FOR A PARTICULAR PURPOSE OR NONINFRINGEMENT OF INTELLECTUAL PROPERTY RIGHTS. IN NO EVENT WILL ADI AND ITS LICENSORS BE LIABLE FOR ANY INCIDENTAL, SPECIAL, INDIRECT, OR CONSEQUENTIAL DAMAGES RESULTING FROM CUSTOMER'S POSSESSION OR USE OF THE EVALUATION BOARD, INCLUDING BUT NOT LIMITED TO LOST PROFITS, DELAY COSTS, LABOR COSTS OR LOSS OF GOODWILL. ADI'S TOTAL LIABILITY FROM ANY AND ALL CAUSES SHALL BE LIMITED TO THE AMOUNT OF ONE HUNDRED US DOLLARS ($100.00). EXPORT. Customer agrees that it will not directly or indirectly export the Evaluation Board to another country, and that it will comply with all applicable United States federal laws and regulations relating to exports. GOVERNING LAW. This Agreement shall be governed by and construed in accordance with the substantive laws of the Commonwealth of Massachusetts (excluding conflict of law rules). Any legal action regarding this Agreement will be heard in the state or federal courts having jurisdiction in Suffolk County, Massachusetts, and Customer hereby submits to the personal jurisdiction and venue of such courts. The United Nations Convention on Contracts for the International Sale of Goods shall not apply to this Agreement and is expressly disclaimed.

**©2010–2011 Analog Devices, Inc. All rights reserved. Trademarks and registered trademarks are the property of their respective owners.**

**UG08981-0-5/11(A)**




www.analog.com