Murata Power Solutions

UEI25 Series

Single Output Isolated 25-Watt DC/DC Converters

Typical unit



Output (V)	Current (A)	Nominal Input (V)
3.3	7.5	48
5	5	48
12	2.1	48

FEATURES

- Cost effective small footprint DC/DC converter, ideal for high current applications
- Industry standard 0.96" x 1.1" x 0.32" open frame package and pinout
- Input voltage range of 36-75 Vdc
- 3.3V, 5V, or 12Vdc fixed output voltages
- Isolation up to 2250 VDC (basic)
- Up to 25 Watts total output power with extensive self-protection shutdown features
- High efficiency synchronous rectifier forward topology up to 91%
- Stable operation with no required external components
- Usable -40 to 85°C temperature range (with derating)
- Certified to UL 60950-1, CAN/CSA-C22.2 No. 60950-1, IEC60950-1, EN60950-1 safety approvals, 2nd edition

PRODUCT OVERVIEW

Featuring a full 25 Watt output in one square inch of board area, the UEI25 series isolated DC/DC converter family offers efficient regulated DC power for printed circuit board mounting. The 0.96" x 1.1" x 0.32" (24.4 x 27.9 x 8.1 mm) converter accepts a 2:1 input voltage range of 36 to 75 Volts DC, ideal for telecom equipment. The industry-standard pinout fits larger 1" x 2" converters. The fixed output voltage is tightly regulated. Applications include small instruments, area-limited microcontrollers, data communications equipment, remote sensor systems, telephone equipment, vehicle and portable electronics.

The UEI25 series includes full magnetic and optical isolation with Basic protection up to 2250 Volts DC. For powering digital systems, the outputs offer fast settling to step transients and will accept higher capacitive loads. Excellent ripple and noise specifications assure compatibility to noise-susceptible circuits. For systems requiring controlled startup/shutdown, an external remote On/Off control may use a switch, transistor or digital logic.

A wealth of self-protection features avoid both converter and external circuit faults. These include input undervoltage lockout and overtemperature shutdown. The outputs current limit using the "hiccup" autorestart technique and the outputs are short-circuit protected. Additional features include output overvoltage and reverse conduction elimination. The high efficiency offers minimal heat buildup and "no fan" operation.

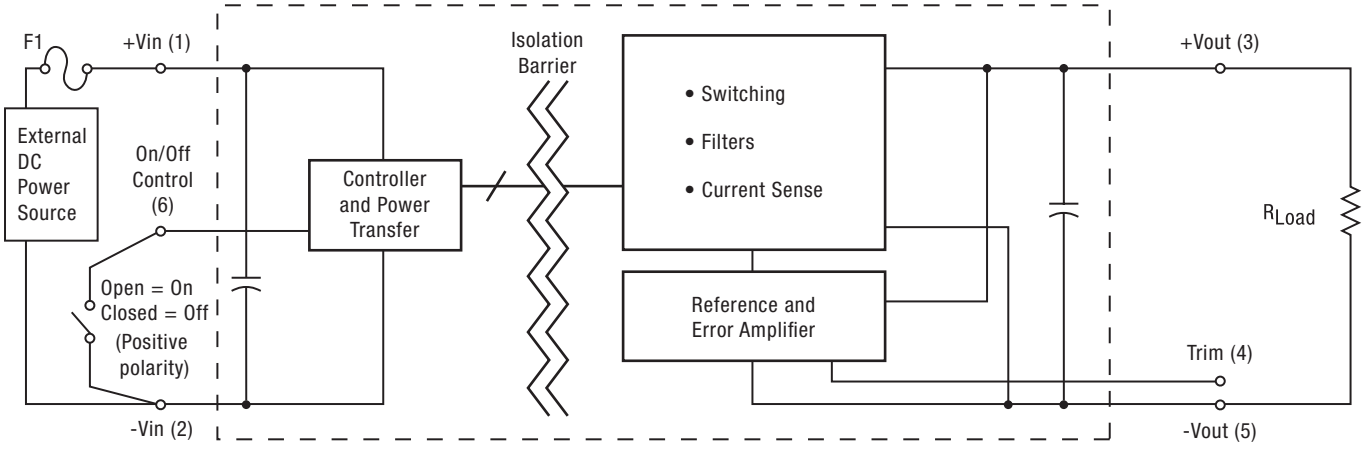

Figure 1. Connection Diagram

Typical topology is shown. Murata Power Solutions recommends an external fuse.

RoHS COMPLIANT 2002/95/EC

For full details go to www.murata-ps.com/rohs

PERFORMANCE SPECIFICATIONS SUMMARY AND ORDERING GUIDE ① ③

	Output							Input				Efficiency		Package, C75		
				R/N (mVp-p)		Regulation (Max.)										
Root Models ①	V_{OUT} (V)	I_{OUT} (A, max)	Total Power (W)	Typ. ②	Max.	Line	Load	V_{IN} Nom. (V)	Range (V)	I_{IN}, min. load (mA)	I_{IN}, full load (A)	Min.	Typ.	Case (inches)	Case (mm)	Pinout
UEI25-033-D48 ④	3.3	7.5	25	50	80	±0.1%	±0.2%	48	36-75	75	0.58	87.0%	89.5%	0.96x1.1x0.32	24.4x27.9x8.1	P85
UEI25-050-D48	5	5	25	50	80	±0.1%	±0.2%	48	36-75	30	0.57	89.0%	91%	0.96x1.1x0.32	24.4x27.9x8.1	P85
UEI25-120-D48	12	2.1	25.2	95	120	±0.1%	±0.1%	48	36-75	20	0.6	86.0%	87.5%	0.96x1.1x0.32	24.4x27.9x8.1	P85

Notes:

① Please refer to the part number structure for additional options and complete ordering part numbers.

② Ripple and Noise is shown at 20 MHz bandwidth.

③ All specifications are at nominal line voltage and full load, +25 °C. unless otherwise noted. See detailed specifications for full conditions.
Output capacitors are 1 µF ceramic in parallel with 10 µF electrolytic. The input cap is 4.7 µF ceramic, low ESR.
I/O caps are necessary for our test equipment and may not be needed for your application.

④ Minimum load is 10% for rated specifications.

PART NUMBER STRUCTURE

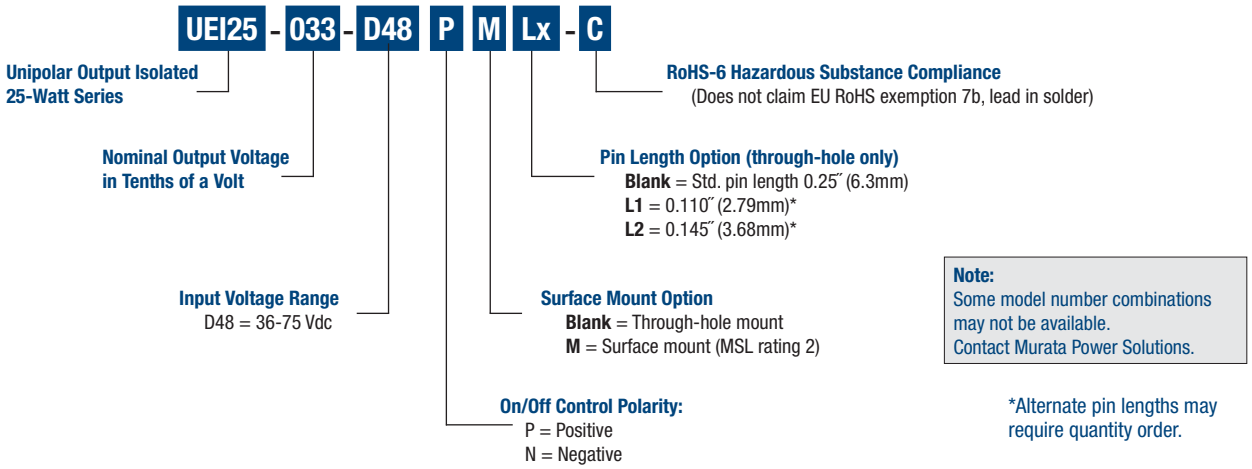

FUNCTIONAL SPECIFICATIONS – MODEL UEI25-033-D48

ABSOLUTE MAXIMUM RATINGS	Conditions ①	Minimum	Typical/Nominal	Maximum	Units
Input Voltage, Continuous	Full power operation	0		80	Vdc
Input Voltage, Transient	Operating or non-operating, 100 mS max. duration	0		100	Vdc
Isolation Voltage	Input to output tested 100 mS			2250	Vdc
Input Reverse Polarity	None, install external fuse		None		Vdc
On/Off Remote Control	Power on or off, referred to -Vin	0		15	Vdc
Output Power		0		25.25	W
Output Current	Current-limited, no damage, short-circuit protected	0		7.5	A
Storage Temperature Range	Vin = Zero (no power)	-55		125	˚C
Absolute maximums are stress ratings. Exposure of devices to greater than any of these conditions may adversely affect long-term reliability. Proper operation under conditions other than those listed in the Performance/Functional Specifications Table is not implied or recommended.					
INPUT					
Operating voltage range		36	48	75	Vdc
Recommended External Fuse	Fast blow			1.5	A
Start-up threshold	Rising input voltage	34	35.2	36	Vdc
Undervoltage shutdown	Falling input voltage	32	34.0	35.2	Vdc
Overvoltage shutdown			None		Vdc
Reverse Polarity Protection	None, install external fuse		None		Vdc
Internal Filter Type			LC		
Input current					
Full Load Conditions	Vin = nominal		0.58	0.60	A
Low Line	Vin = minimum		0.79	0.81	A
Inrush Transient			0.05		A2-Sec.
Output in Short Circuit			50	100	mA
No Load	Iout = minimum, unit=ON		75	100	mA
Standby Mode (Off, UV, OT)			1	2	mA
Reflected (back) ripple current ②	Measured at input with specified filter		30		mA, RMS
Pre-biased startup	External output voltage < Vset		Monotonic		
GENERAL and SAFETY					
Efficiency	Vin=48V, full load	87	89.5		%
	Vin=36V, full load	86.5	87.5		%
Isolation					
Isolation Voltage	Input to output, continuous	2250			Vdc
Insulation Safety Rating			basic		
Isolation Resistance		10			Mohm
Isolation Capacitance			1000		pF
Safety	Certified to UL-60950-1, CSA-C22.2 No.60950-1, IEC/EN60950-1, 2nd edition		Yes		
Calculated MTBF	Per MIL-HDBK-217F, ground benign, Tambient=+30˚C		TBD		Hours x 10^6
Calculated MTBF	Per Telcordia SR332, issue 1, class 3, ground fixed, Tambient=+40°C		2		Hours x 10^6
DYNAMIC CHARACTERISTICS					
Fixed Switching Frequency		300	330	360	KHz
Startup Time	Power On to Vout regulated			50	mS
Startup Time	Remote ON to Vout regulated			50	mS
Dynamic Load Response	50-75-50% load step, settling time to within ±2% of Vout		180	250	µSec
Dynamic load di/dt				2	A/µSec
Dynamic Load Peak Deviation	same as above		±30	±100	mV
FEATURES and OPTIONS					
Remote On/Off Control ④					
"N" suffix					
Negative Logic, ON state	ON = Ground pin or external voltage	-0.7		1.2	V
Negative Logic, OFF state	OFF = Pin open or external voltage	10		15	V
Control Current			1		mA
"P" suffix					
Positive Logic, ON state	ON = Pin open or external voltage	10		15	V
Positive Logic, OFF state	OFF = Ground pin or external voltage	-0.7		1.2	V
Control Current			1		mA

FUNCTIONAL SPECIFICATIONS (CONT.) – MODEL UEI25-033-D48

OUTPUT	Conditions ① ③	Minimum	Typical/Nominal	Maximum	Units
Total Output Power	See Derating	0.0	25.0	25.25	W
Voltage					
Nominal Output Voltage	No trim	3.267	3.30	3.333	Vdc
Setting Accuracy	At 50% load	-1		+1	% of Vset.
Output Voltage Range	User-adjustable	-10		+10	% of Vnom.
Overvoltage Protection	Via magnetic feedback	4.2	5	5.7	Vdc
Current					
Output Current Range		0.7575	7.575	7.575	A
Minimum Load ③			10% minimum load		% of Iout
Current Limit Inception	98% of Vnom., after warmup	8.5	10	11	A
Short Circuit					
Short Circuit Current	Hiccup technique, autorecovery			0.3	A
Short Circuit Duration (remove short for recovery)	Output shorted to ground, no damage		Continuous		
Short circuit protection method	Current limiting				
Regulation ⑤					
Line Regulation	Vin=min. to max., Vout=nom., 50% load			±0.1	% of Vout
Load Regulation	Iout=min. to max., Vin=48V			±0.2	% of Vout
Ripple and Noise	5 Hz- 20 MHz BW		50	80	mV pk-pk
Temperature Coefficient	At all outputs		0.02		% of Vnom./°C
Maximum Capacitive Loading (10% ceramic, 90% Oscon)	Cap. ESR=<0.02Ω, full resistive load	0		2000	µF
MECHANICAL (Through Hole Models)	**Conditions ①**	**Minimum**	**Typical/Nominal**	**Maximum**	**Units**
Outline Dimensions (no baseplate)	C75 case		0.9x1.1x0.32		Inches
(Please refer to outline drawing)	WxLxH		22.86x27.9x8.1		mm
Weight			0.32		Ounces
			9.07		Grams
Through Hole Pin Diameter			0.04		Inches
			1.016		mm
Through Hole Pin Material			Copper alloy		
TH Pin Plating Metal and Thickness	Nickel subplate		50		µ-inches
	Gold overplate		5		µ-inches
ENVIRONMENTAL					
Operating Ambient Temperature Range	With derating, 200 LFM	-40		85	°C
	No derating, 200 LFM	-40		70	°C
Storage Temperature	Vin = Zero (no power)	-55		125	°C
Thermal Protection/Shutdown	Measured in center	110	115	120	°C
Electromagnetic Interference	External filter is required				
Conducted, EN55022/CISPR22			B		Class
Radiated, EN55022/CISPR22			B		Class
Relative humidity, non-condensing	To +85°C	10		90	%RH
Altitude	must derate -1%/1000 feet	-500		10,000	feet
		-152		3048	meters
RoHS rating			RoHS-6		

Notes

① Unless otherwise noted, all specifications are at nominal input voltage, nominal output voltage and full load. General conditions are +25° Celsius ambient temperature, near sea level altitude, natural convection airflow. All models are tested and specified with external parallel 1 µF and 10 µF multi-layer ceramic output capacitors. The external input capacitor is 4.7 µF ceramic. All capacitors are low-ESR types wired close to the converter. These capacitors are necessary for our test equipment and may not be needed in the user's application.

② Input (back) ripple current is tested and specified over 5 Hz to 20 MHz bandwidth. Input filtering is Cbus=220 µF, Cin=33 µF and Lbus=12 µH.

③ All models are stable and regulate to specification under minimum (10%) load. Operation under no load will not damage the converter but may increase regulation, output ripple, and noise.

④ The Remote On/Off Control is referred to -Vin.

⑤ Regulation specifications describe the output voltage changes as the line voltage or load current is varied from its nominal or midpoint value to either extreme.

FUNCTIONAL SPECIFICATIONS – MODEL UEI25-050-D48

ABSOLUTE MAXIMUM RATINGS	Conditions ①	Minimum	Typical/Nominal	Maximum	Units
Input Voltage, Continuous	Full power operation	0		80	Vdc
Input Voltage, Transient	Operating or non-operating, 100 mS max. duration	0		100	Vdc
Isolation Voltage	Input to output tested 100 mS			2250	Vdc
Input Reverse Polarity	None, install external fuse		None		Vdc
On/Off Remote Control	Power on or off, referred to -Vin	0		15	Vdc
Output Power		0		25.25	W
Output Current	Current-limited, no damage, short-circuit protected	0		5	A
Storage Temperature Range	Vin = Zero (no power)	-55		125	˚C
Absolute maximums are stress ratings. Exposure of devices to greater than any of these conditions may adversely affect long-term reliability. Proper operation under conditions other than those listed in the Performance/Functional Specifications Table is not implied or recommended.					
INPUT					
Operating voltage range		36	48	75	Vdc
Recommended External Fuse	Fast blow			1.5	A
Start-up threshold	Rising input voltage	34	35	36	Vdc
Undervoltage shutdown	Falling input voltage	32	33.5	34.5	Vdc
Overvoltage shutdown			None		Vdc
Reverse Polarity Protection	None, install external fuse		None		Vdc
Internal Filter Type			LC		
Input current					
Full Load Conditions	Vin = nominal		0.57	0.59	A
Low Line	Vin = minimum		0.76	0.79	A
Inrush Transient			0.05		A2-Sec.
Output in Short Circuit			50	100	mA
No Load	Iout = minimum, unit=ON		30	50	mA
Standby Mode (Off, UV, OT)			1	3	mA
Reflected (back) ripple current ②	Measured at input with specified filter		30		mA, RMS
Pre-biased startup	External output voltage < Vset		Monotonic		
GENERAL and SAFETY					
Efficiency	Vin=48V, full load	89	91		%
	Vin=36V, full load	89	91		%
Isolation					
Isolation Voltage	Input to output, continuous	2250			Vdc
Insulation Safety Rating			basic		
Isolation Resistance		10			Mohm
Isolation Capacitance			2000		pF
Safety	Certified to UL-60950-1, CSA-C22.2 No.60950-1, IEC/EN60950-1, 2nd edition		Yes		
Calculated MTBF	Per MIL-HDBK-217F, ground benign, Tambient=+30˚C		TBD		Hours x 10^6
Calculated MTBF	Per Telcordia SR332, issue 1, class 3, ground fixed, Tambient=+40°C		2		Hours x 10^6
DYNAMIC CHARACTERISTICS					
Fixed Switching Frequency		300	330	360	KHz
Startup Time	Power On to Vout regulated			50	mS
Startup Time	Remote ON to Vout regulated			50	mS
Dynamic Load Response	50-75-50% load step, settling time to within ±2% of Vout		200		µSec
Dynamic load di/dt				2	A/µSec
Dynamic Load Peak Deviation	same as above		±150		mV
FEATURES and OPTIONS					
Remote On/Off Control ④					
"N" suffix					
Negative Logic, ON state	ON = Ground pin or external voltage	-0.7		0.7	V
Negative Logic, OFF state	OFF = Pin open or external voltage	10		15	V
Control Current			1		mA
"P" suffix					
Positive Logic, ON state	ON = Pin open or external voltage	10		15	V
Positive Logic, OFF state	OFF = Ground pin or external voltage	-0.7		0.8	V
Control Current			1		mA

FUNCTIONAL SPECIFICATIONS (CONT.) – MODEL UEI25-050-D48

OUTPUT	Conditions ① ③	Minimum	Typical/Nominal	Maximum	Units
Total Output Power	See Derating	0.0	25.0	25.25	W
Voltage					
Nominal Output Voltage	No trim	4.95	5.00	5.05	Vdc
Setting Accuracy	At 50% load	-1		+1	% of Vset.
Output Voltage Range	User-adjustable	-10		+10	% of Vnom.
Overvoltage Protection	Via magnetic feedback	6	6.5	7.5	Vdc
Current					
Output Current Range		0	5.0	5.0	A
Minimum Load ③			No minimum load		% of Iout
Current Limit Inception	98% of Vnom., after warmup	5.3	6.8	7.3	A
Short Circuit					
Short Circuit Current	Hiccup technique, autorecovery			0.3	A
Short Circuit Duration (remove short for recovery)	Output shorted to ground, no damage		Continuous		
Short circuit protection method	Current limiting				
Regulation ⑤					
Line Regulation	Vin=min. to max., Vout=nom., 50% load			±0.1	% of Vout
Load Regulation	Iout=min. to max., Vin=48V			±0.2	% of Vout
Ripple and Noise	5 Hz- 20 MHz BW		50	80	mV pk-pk
Temperature Coefficient	At all outputs		0.02		% of Vnom./°C
Maximum Capacitive Loading (10% ceramic, 90% Oscon)	Cap. ESR=<0.02Ω, full resistive load	0		2000	µF
MECHANICAL (Through Hole Models)	**Conditions ①**	**Minimum**	**Typical/Nominal**	**Maximum**	**Units**
Outline Dimensions (no baseplate)	C75 case		0.96x1.1x0.32		Inches
(Please refer to outline drawing)	WxLxH		24.4x27.9x8.1		mm
Weight			0.32		Ounces
			9.07		Grams
Through Hole Pin Diameter			0.04		Inches
			1.016		mm
Through Hole Pin Material			Copper alloy		
TH Pin Plating Metal and Thickness	Nickel subplate		50		µ-inches
	Gold overplate		5		µ-inches
ENVIRONMENTAL					
Operating Ambient Temperature Range	With derating, 200 LFM	-40		85	°C
	No derating, 200 LFM, full power	-40		82	°C
Operating Case Temperature Range	No derating	-40		105	°C
Storage Temperature	Vin = Zero (no power)	-55		125	°C
Thermal Protection/Shutdown	Measured in center	110	115	120	°C
Electromagnetic Interference	External filter is required				
Conducted, EN55022/CISPR22			B		Class
Radiated, EN55022/CISPR22			B		Class
Relative humidity, non-condensing	To +85°C	10		90	%RH
Altitude	must derate -1%/1000 feet	-500		10,000	feet
		-152		3048	meters
RoHS rating			RoHS-6		

Notes

① Unless otherwise noted, all specifications are at nominal input voltage, nominal output voltage and full load. General conditions are +25° Celsius ambient temperature, near sea level altitude, natural convection airflow. All models are tested and specified with external parallel 1 µF and 10 µF multi-layer ceramic output capacitors. The external input capacitor is 4.7 µF ceramic. All capacitors are low-ESR types wired close to the converter. These capacitors are necessary for our test equipment and may not be needed in the user's application.

② Input (back) ripple current is tested and specified over 5 Hz to 20 MHz bandwidth. Input filtering is Cbus=220 µF, Cin=33 µF and Lbus=12 µH.

③ All models are stable and regulate to specification under no load.

④ The Remote On/Off Control is referred to -Vin.

⑤ Regulation specifications describe the output voltage changes as the line voltage or load current is varied from its nominal or midpoint value to either extreme.

FUNCTIONAL SPECIFICATIONS – MODEL UEI25-120-D48

ABSOLUTE MAXIMUM RATINGS	Conditions ①	Minimum	Typical/Nominal	Maximum	Units
Input Voltage, Continuous	Full power operation	0		80	Vdc
Input Voltage, Transient	Operating or non-operating, 100 mS max. duration	0		100	Vdc
Isolation Voltage	Input to output tested 100 mS			2250	Vdc
Input Reverse Polarity	None, install external fuse		None		Vdc
On/Off Remote Control	Power on or off, referred to -Vin	0		15	Vdc
Output Power		0		25	W
Output Current	Current-limited, no damage, short-circuit protected	0		2.1	A
Storage Temperature Range	Vin = Zero (no power)	-55		125	˚C
Absolute maximums are stress ratings. Exposure of devices to greater than any of these conditions may adversely affect long-term reliability. Proper operation under conditions other than those listed in the Performance/Functional Specifications Table is not implied or recommended.					
INPUT					
Operating voltage range		36	48	75	Vdc
Recommended External Fuse	Fast blow			1.5	A
Start-up threshold	Rising input voltage	34	35.2	36	Vdc
Undervoltage shutdown	Falling input voltage	32	34.0	35.2	Vdc
Overvoltage shutdown			None		Vdc
Reverse Polarity Protection	None, install external fuse		None		Vdc
Internal Filter Type			capacitive		
Input current					
Full Load Conditions	Vin = nominal		0.600	0.617	A
Low Line	Vin = minimum		0.809	0.842	A
Inrush Transient			0.05		A2-Sec.
Output in Short Circuit			50	100	mA
No Load	Iout = minimum, unit=ON		20	35	mA
Standby Mode (Off, UV, OT)			1	2	mA
Reflected (back) ripple current ②	Measured at input with specified filter		30		mA, RMS
Pre-biased startup	External output voltage < Vset		Monotonic		
GENERAL and SAFETY					
Efficiency	Vin=48V, full load	86.0	87.5		%
Isolation					
Isolation Voltage	Input to output, continuous	2250			Vdc
Insulation Safety Rating			basic		
Isolation Resistance		10			Mohm
Isolation Capacitance			1700		pF
Safety	Certified to UL-60950-1, CSA-C22.2 No.60950-1, IEC/EN60950-1		Yes		
Calculated MTBF	Per MIL-HDBK-217F, ground benign, Tambient=+30˚C		TBD		Hours x 10^6
Calculated MTBF	Per Telcordia SR332, issue 1, class 3, ground fixed, Tambient=+40°C		2		Hours x 10^6
DYNAMIC CHARACTERISTICS					
Fixed Switching Frequency		295	325	355	KHz
Startup Time	Power On to Vout regulated		10	50	mS
Startup Time	Remote ON to Vout regulated		10	50	mS
Dynamic Load Response	50-75-50% load step, settling time to within ±1% of Vout		100	200	µSec
Dynamic load di/dt				1	A/µSec
Dynamic Load Peak Deviation	same as above		±250	±350	mV
FEATURES and OPTIONS					
Remote On/Off Control ④					
"N" suffix					
Negative Logic, ON state	ON = Ground pin or external voltage	-0.7		0.7	V
Negative Logic, OFF state	OFF = Pin open or external voltage	10		15	V
Control Current			1		mA
"P" suffix					
Positive Logic, ON state	ON = Pin open or external voltage	10		15	V
Positive Logic, OFF state	OFF = Ground pin or external voltage	-0.7		0.8	V
Control Current			1		mA

FUNCTIONAL SPECIFICATIONS (CONT.) – MODEL UEI25-120-D48

OUTPUT	Conditions ① ③	Minimum	Typical/Nominal	Maximum	Units
Total Output Power	See Derating	0.0	25.2	25.45	W
Voltage					
Nominal Output Voltage	No trim	11.88	12.00	12.12	Vdc
Setting Accuracy	At 50% load	-1		+1	% of Vset.
Output Voltage Range	User-adjustable	-10		+10	% of Vnom.
Overvoltage Protection	Via magnetic feedback	14	19	22	Vdc
Current					
Output Current Range		0.0	2.1	2.1	A
Minimum Load ③			No minimum load		
Current Limit Inception	97% of Vnom., after warmup	2.3	3	3.4	A
Short Circuit					
Short Circuit Current	Hiccup technique, autorecovery within ±1.25% of Vout			0.1	A
Short Circuit Duration (remove short for recovery)	Output shorted to ground, no damage		Continuous		
Short circuit protection method	Current limiting				
Regulation ⑤					
Line Regulation	Vin=min. to max., Vout=nom., 50% load			±0.075	% of Vout
Load Regulation	Iout=min. to max., Vin=48V			±0.05	% of Vout
Ripple and Noise	5 Hz- 20 MHz BW		95	120	mV pk-pk
Temperature Coefficient	At all outputs		0.02		% of Vnom./°C
Maximum Capacitive Loading (10% ceramic, 90% Oscon)	Cap. ESR=<0.02Ω, full resistive load	0		470	µF
MECHANICAL (Through Hole Models)	**Conditions ①**	**Minimum**	**Typical/Nominal**	**Maximum**	**Units**
Outline Dimensions (no baseplate)	C75 case		0.96x1.1x0.32		Inches
(Please refer to outline drawing)	WxLxH		24.38x27.94x8.13		mm
Weight			0.32		Ounces
			9.07		Grams
Through Hole Pin Diameter			0.04		Inches
			1.016		mm
Through Hole Pin Material			Copper alloy		
TH Pin Plating Metal and Thickness	Nickel subplate		50		µ-inches
	Gold overplate		5		µ-inches
ENVIRONMENTAL					
Operating Ambient Temperature Range	With derating, 200 LFM	-40		85	°C
Storage Temperature	Vin = Zero (no power)	-55		125	°C
Thermal Protection/Shutdown	Measured at hotspot	130	135	150	°C
Electromagnetic Interference	External filter is required				
Conducted, EN55022/CISPR22			B		Class
Radiated, EN55022/CISPR22			B		Class
Relative humidity, non-condensing	To +85°C	10		90	%RH
Altitude	must derate -1%/1000 feet	-500		10,000	feet
		-152		3048	meters
RoHS rating			RoHS-6		

Notes

① Unless otherwise noted, all specifications are at nominal input voltage, nominal output voltage and full load. General conditions are +25° Celsius ambient temperature, near sea level altitude, natural convection airflow. All models are tested and specified with external parallel 1 µF and 10 µF multi-layer ceramic output capacitors. The external input capacitor is 4.7 µF ceramic. All capacitors are low-ESR types wired close to the converter. These capacitors are necessary for our test equipment and may not be needed in the user's application.

② Input (back) ripple current is tested and specified over 5 Hz to 20 MHz bandwidth. Input filtering is Cbus=220 µF, Cin=33 µF and Lbus=12 µH.

③ All models are stable and regulate to specification under no load.

④ The Remote On/Off Control is referred to -Vin.

⑤ Regulation specifications describe the output voltage changes as the line voltage or load current is varied from its nominal or midpoint value to either extreme.

MECHANICAL SPECIFICATIONS, OPEN FRAME THROUGH-HOLE MOUNT

Dimensions are in inches (mm shown for ref. only).

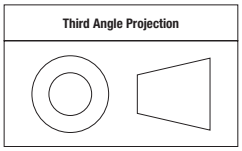

Tolerances (unless otherwise specified):
.XX ± 0.02 (0.5)
.XXX ± 0.010 (0.25)
Angles ± 1˚

Components are shown for reference only.

Case 75

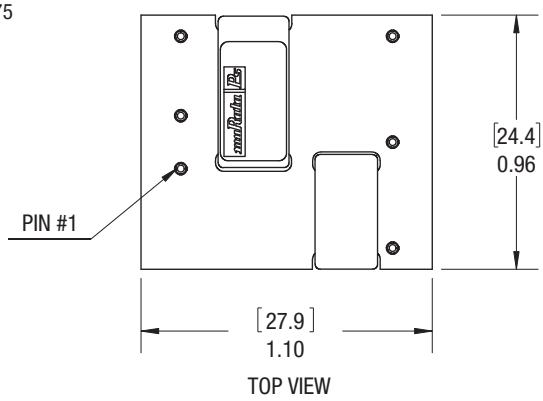

TOP VIEW

SIDE VIEW

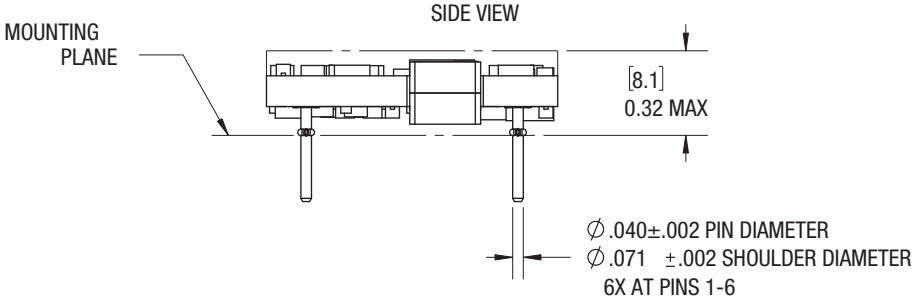

INPUT/OUTPUT CONNECTIONS	
Pin	Function P85
1	Positive Vin
2	Negative Vin
3	Positive Vout
4	Output Trim
5	Negative Vout
6	On/Off Control*

*The Remote On/Off can be provided with either positive (P suffix) or negative (N suffix) polarity

These converters are plug-compatible to competitive units. In case of pinout numbering inconsistency, follow the pin FUNCTION, not the pin number when laying out your PC board.

BOTTOM VIEW

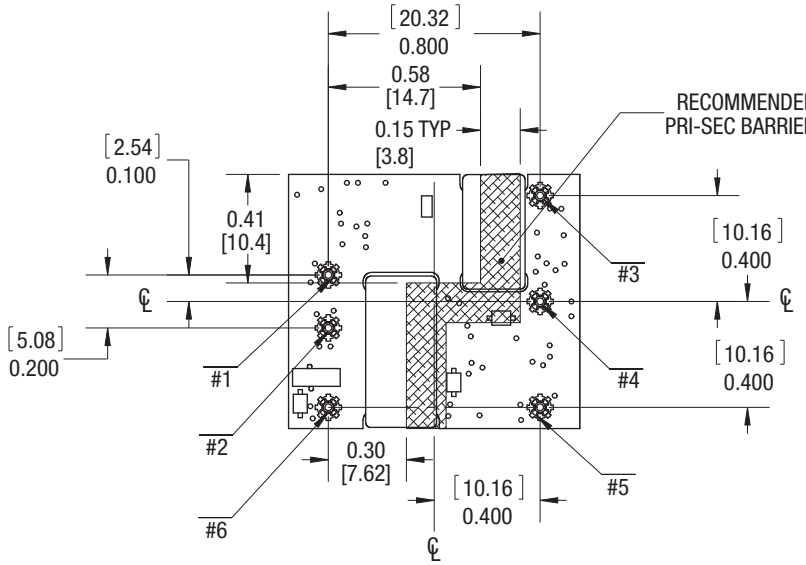

END VIEW

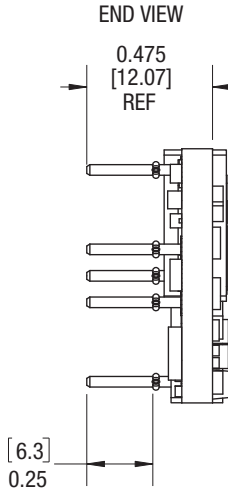

Standard pin length is shown. Please refer to the Ordering Guide for alternate pin lengths.

SHIPPING TRAYS AND BOXES, THROUGH-HOLE MOUNT

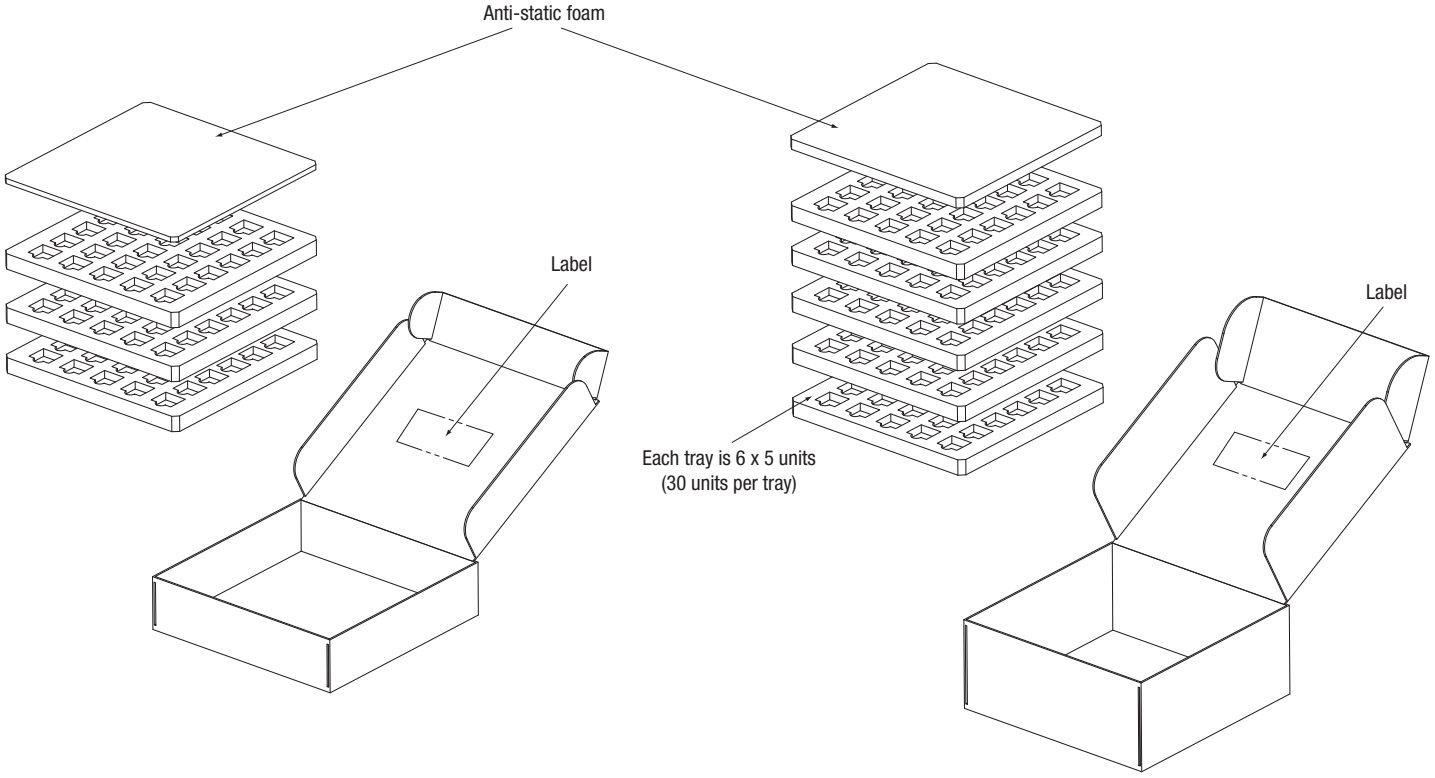

SHIPPING TRAY DIMENSIONS

UEI modules are supplied in a 30-piece (6 x 5) shipping tray. The tray is an anti-static closed-cell polyethylene foam. Dimensions are shown below.

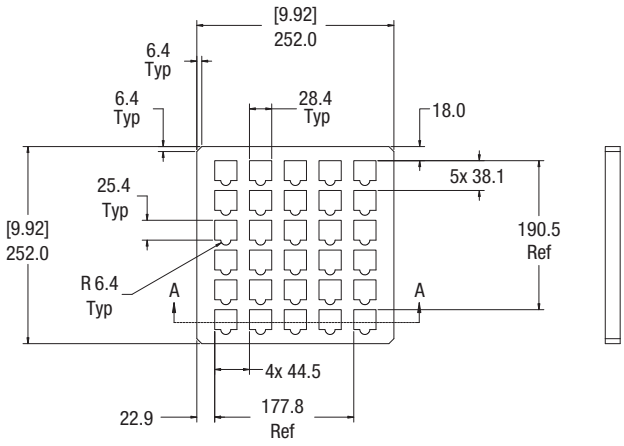

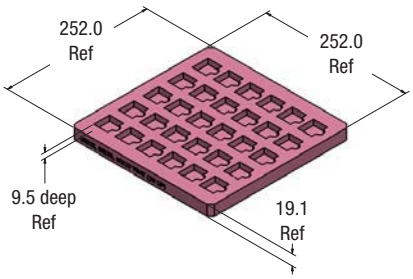

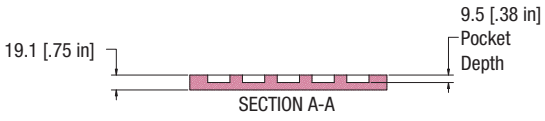

Notes:

1. Material: Dow 220 antistat ethafoam (Density: 34-35 kg/m3)
2. Dimensions: 252 x 252 x 19.1 mm 6 x 5 array (30 per tray)
3. All dimensions in millimeters [inches]
4. Tolerances unless otherwise specified: +1/-0

MECHANICAL SPECIFICATIONS, SURFACE MOUNT (MSL RATING 2)

Dimensions are in inches (mm shown for ref. only).

Case 75

TOP VIEW

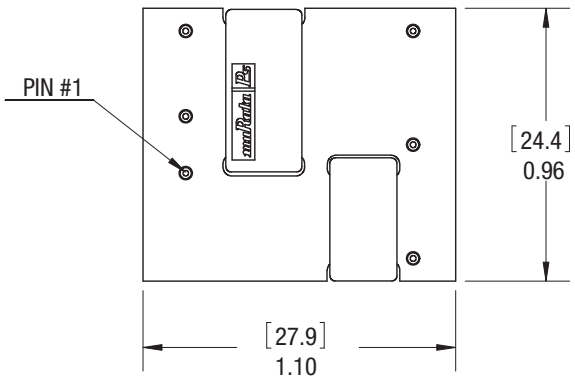

SIDE VIEW

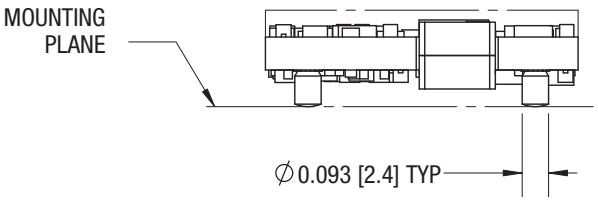

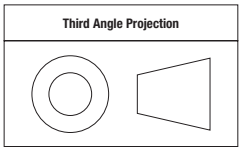

Tolerances (unless otherwise specified):
.XX ± 0.02 (0.5)
.XXX ± 0.010 (0.25)
Angles ± 1˚

Components are shown for reference only.

INPUT/OUTPUT CONNECTIONS	
Pin	Function P85
1	Positive Vin
2	Negative Vin
3	Positive Vout
4	Output Trim
5	Negative Vout
6	On/Off Control*
*The Remote On/Off can be provided with either positive (P suffix) or negative (N suffix) polarity	

These converters are plug-compatible to competitive units. In case of pinout numbering inconsistency, follow the pin FUNCTION, not the pin number when laying out your PC board.

BOTTOM VIEW

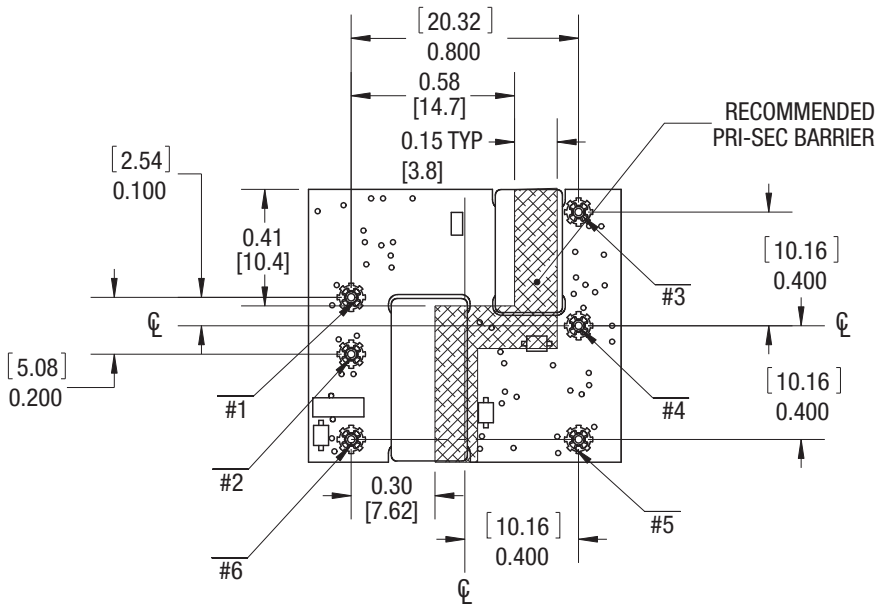

END VIEW

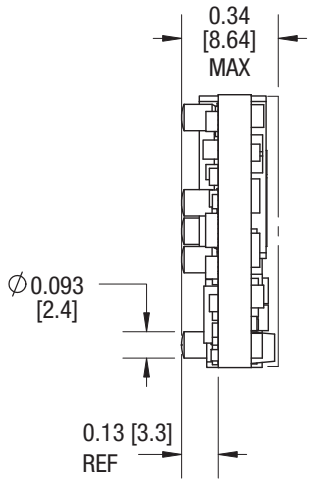

RECOMMENDED SMT PAD LAYOUT

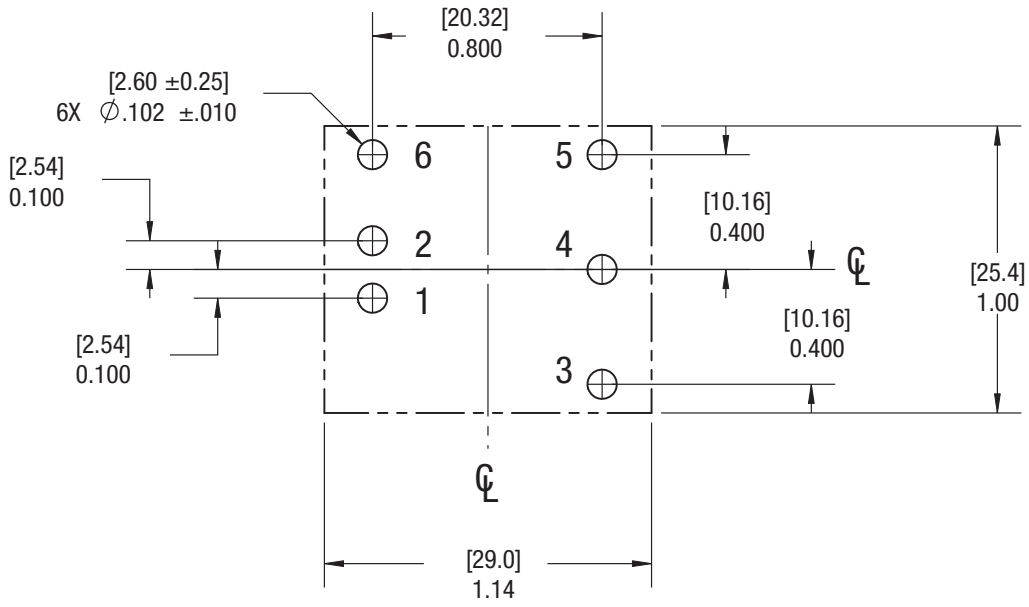

INPUT/OUTPUT CONNECTIONS	
Pin	Function P85
1	Positive Vin
2	Negative Vin
3	Positive Vout
4	Output Trim
5	Negative Vout
6	On/Off Control*

*The Remote On/Off can be provided with either positive (P suffix) or negative (N suffix) polarity

SURFACE MOUNT TAPE AND REEL INFORMATION (MSL RATING 2)

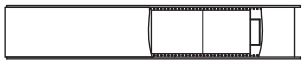

PACKAGING CONFORMS TO EIA-481
CONVERTERS SHIPPING IN QUANTITIES
OF 100 PER REEL

NOTE: The SMT package has an MSL 2 rating.

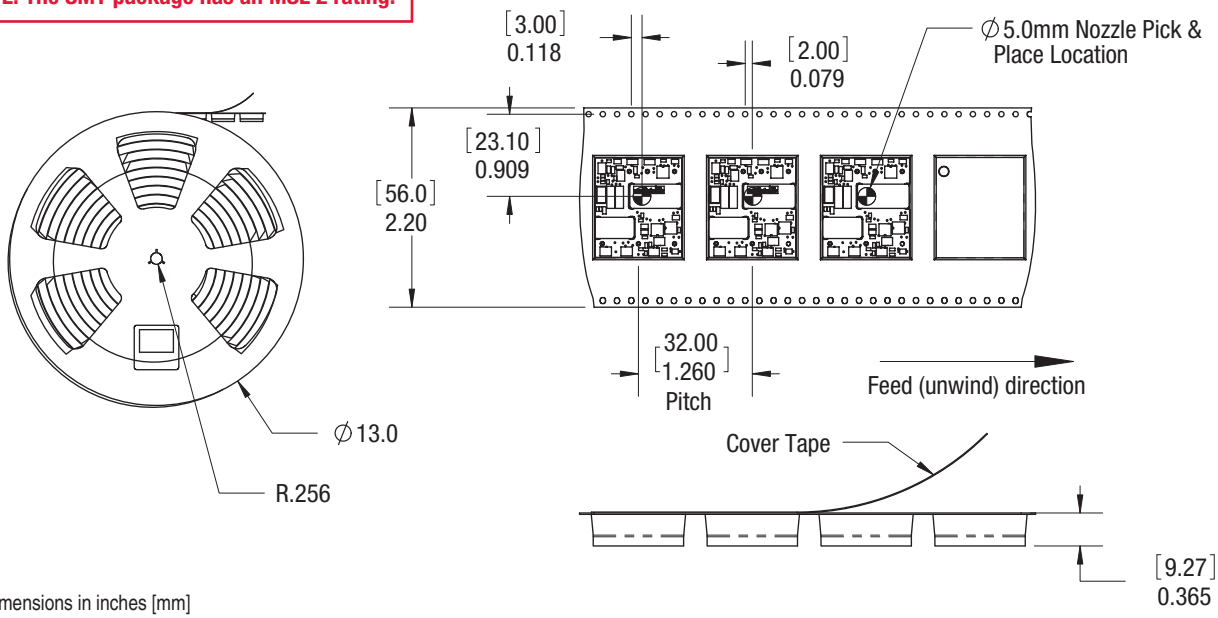

Dimensions in inches [mm]

UEI25-033-D48 PERFORMANCE DATA

Efficiency vs. Line Voltage and Load Current @ 25°C

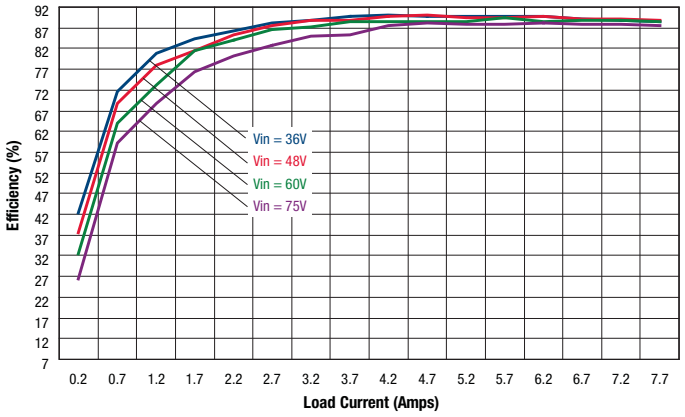

Maximum Current Temperature Derating @sea level
(airflow is from input to output)

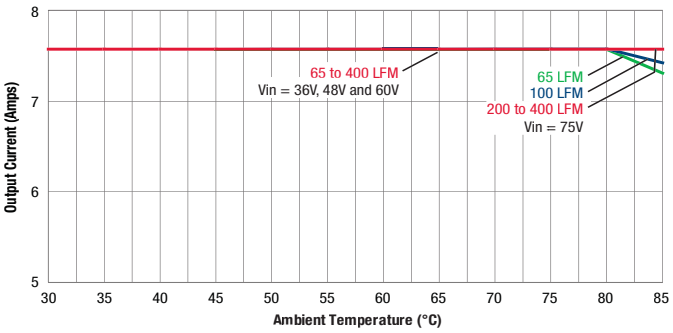

Thermal image with "hot spot" at full load current with 63°C ambient, air flowing at minimal rate of 65 LFM. Air is flowing across the converter from +Vo to -Vo at 48V input. Identifiable and recommended maximum value to be verified in application.

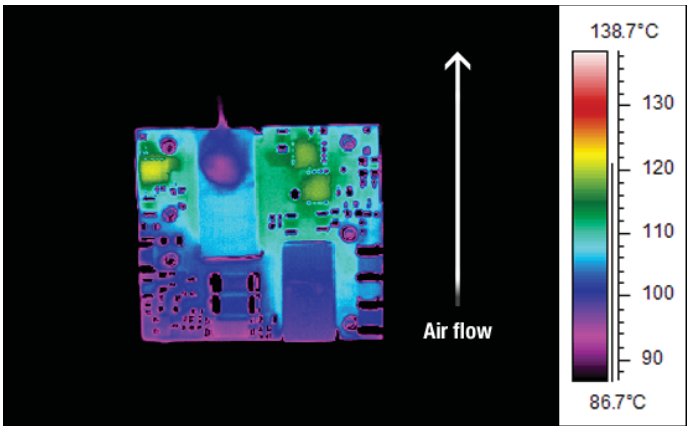

On/Off ENABLE DELAY (Vin=48, Vout=nom, Iout=7.5A, Cload=0uF, Ta=+25°C., ScopeBW=20Mhz) Trace 1= Enable. Trace 4=Vout

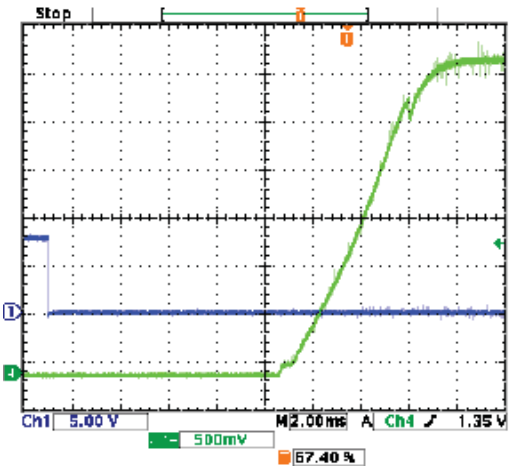

On/Off ENABLE DELAY (Vin=48, Vout=nom, Iout=.7575mA, Cload=0uF, Ta=+25°C., ScopeBW=20Mhz) Trace 1= Enable. Trace 4=Vout

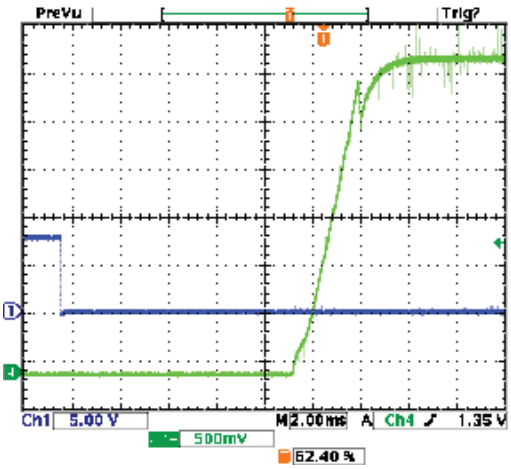

UEI25-033-D48 PERFORMANCE DATA, CONTINUED

On/Off ENABLE DELAY (Vin=48, Vout=nom, Iout=7.5A, Cload=2000uF, Ta=+25°C., ScopeBW=20Mhz) Trace 1= Enable. Trace 4=Vout

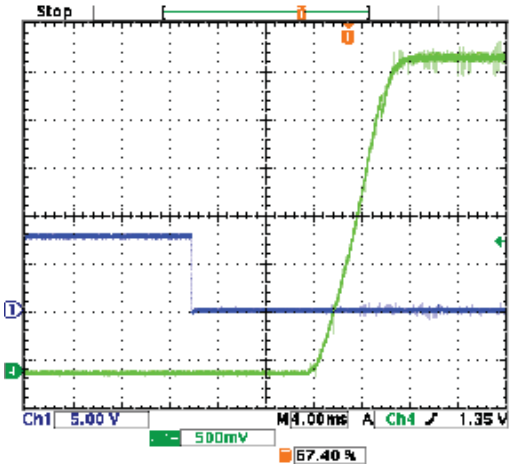

Step Load Transient Response (Vin=48V, Vout=nom., Iout=50-75-50% of full load, Cload= 1 uFb ceramic || 10uF tantalum, Ta=+25°C., ScopeBW=20Mhz)

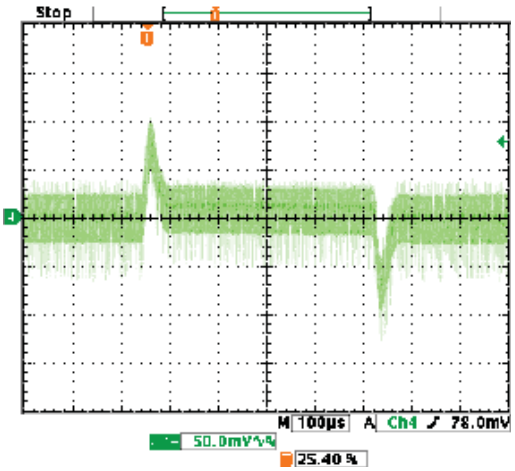

Output Ripple and Noise (Vin=48V, Vout=nom., Iout=7.5A, Cload= 1 uFb ceramic || 10uF tantalum, Ta=+25°C., ScopeBW=20Mhz)

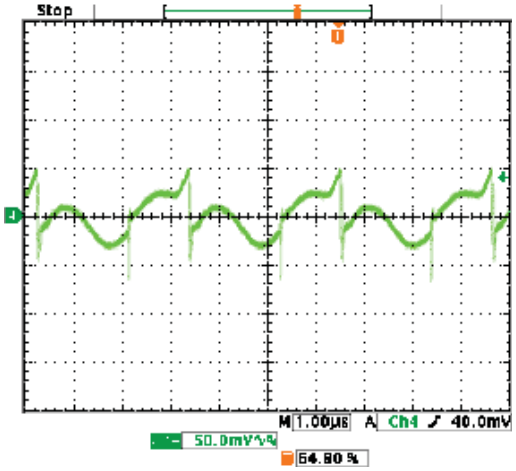

Output Ripple and Noise (Vin=48V, Vout=nom., Iout=.7575mA, Cload= 1 uFb ceramic || 10uF tantalum, Ta=+25°C., ScopeBW=20Mhz)

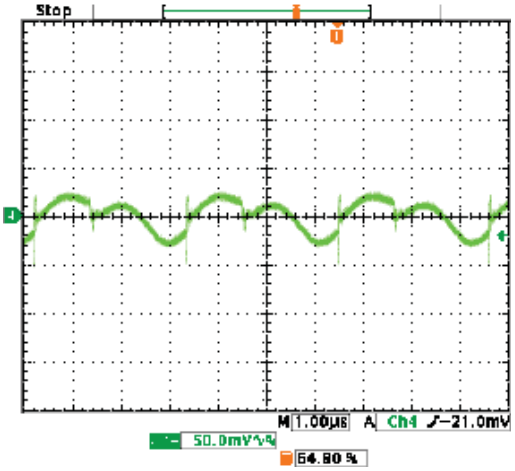

UEI25-050-D48 PERFORMANCE DATA

Efficiency vs. Line Voltage and Load Current @ 25°C

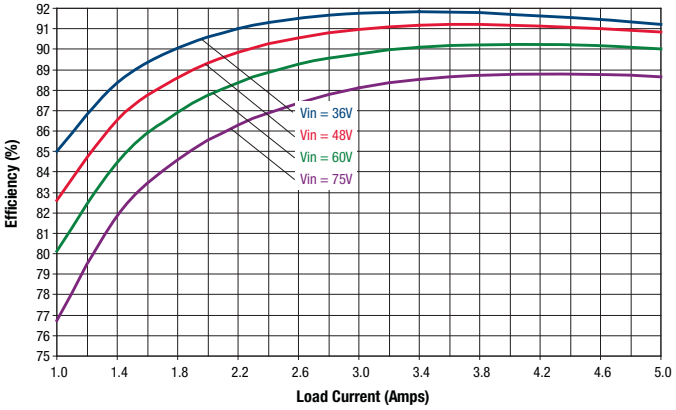

Power Dissipation vs. Load Current @ 25°C

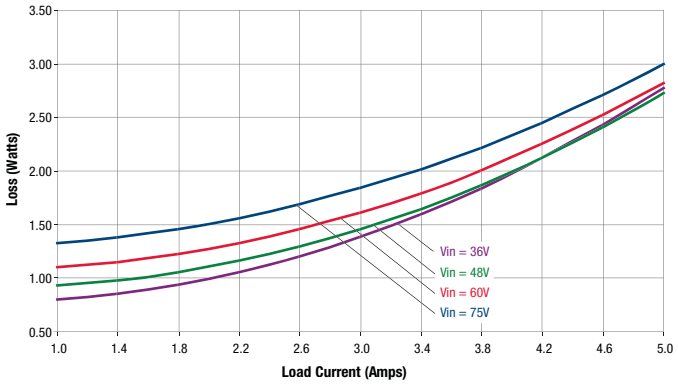

Maximum Current Temperature Derating @sea level
(V_{IN} = 36V, 48V, 60V, and 75V, airflow is from pin 1 to pin 3)

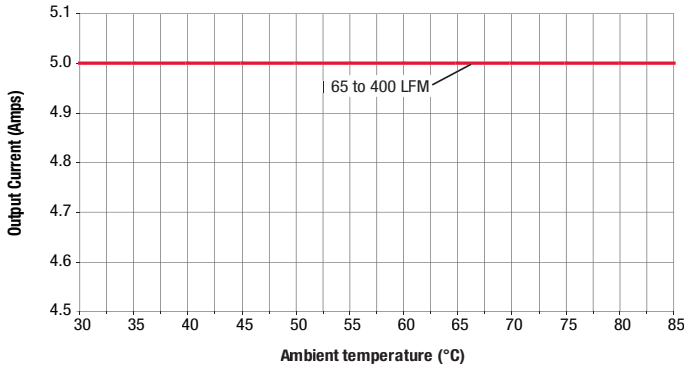

Thermal image with "hot spot" at full load current with 80°C ambient, air flowing at minimal rate of 65 LFM. Air is flowing across the converter from +Vo to -Vo at 48V input. Identifiable and recommended maximum value to be verified in application.

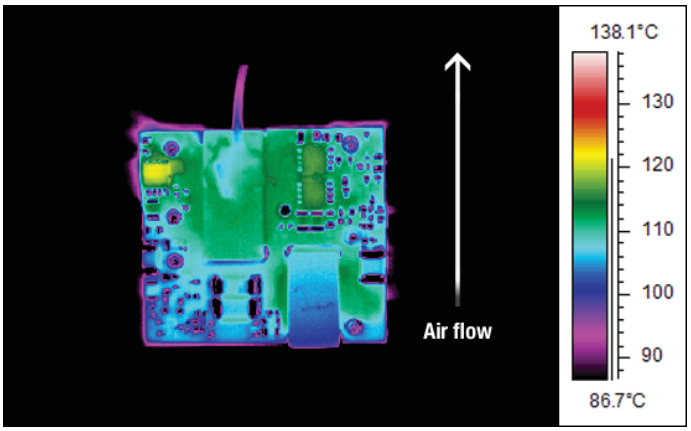

UEI25-050-D48 PERFORMANCE DATA, CONTINUED

On/Off Enable Delay (Vin=48V, Vout=nom., Iout=no load, Cload=0 µF, Ta=+25°C., ScopeBW=20MHz) Trace 1=Enable, Trace 4=Vout

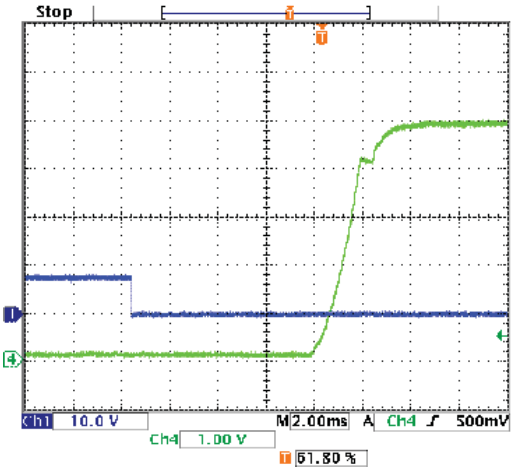

On/Off Enable Delay (Vin=48V, Vout=nom., Iout=5A, Cload=0 µF, Ta=+25°C., ScopeBW=20MHz) Trace 1=Enable, Trace 4=Vout

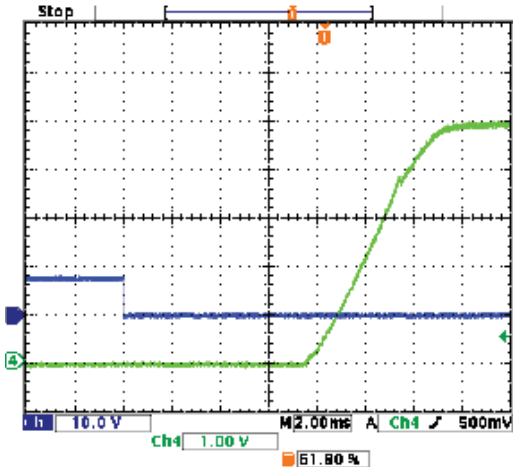

On/Off Enable Delay (Vin=48V, Vout=nom., Iout=5A, Cload=2000 µF, Ta=+25°C., ScopeBW=20MHz) Trace 1=Enable, Trace 4=Vout

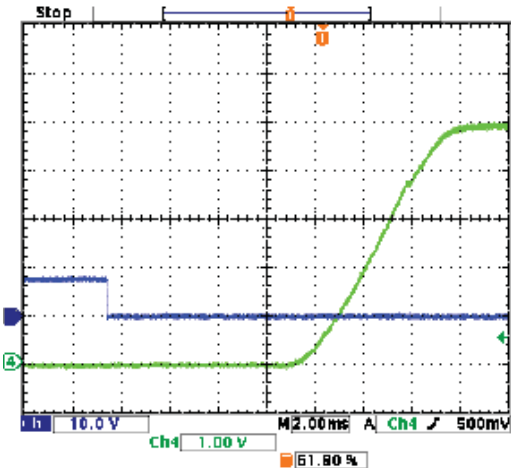

Step Load Transient Response (Vin=48V, Vout=nom., Iout=50-75-50% of full load, Cload=1 µF ceramic || 10µF tantalum, Ta=+25°C., ScopeBW=20MHz)

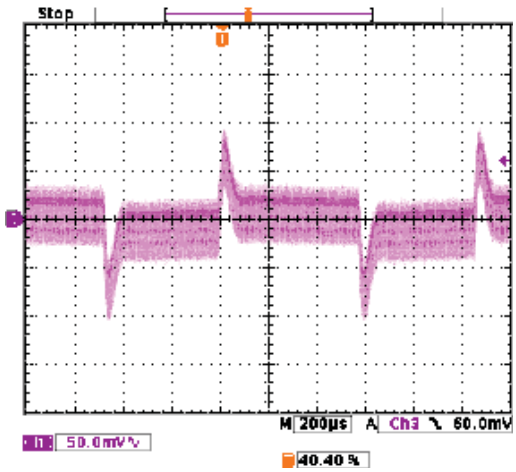

Output Ripple and Noise (Vin=48V, Vout=nom., Iout=no load, Cload=1 µF ceramic || 10µF tantalum, Ta=+25°C., ScopeBW=20MHz)

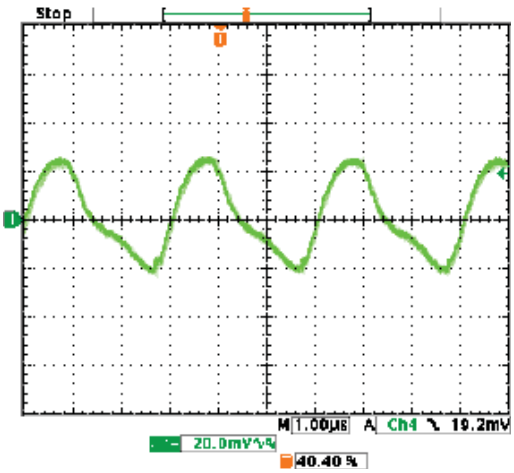

Output Ripple and Noise (Vin=48V, Vout=nom., Iout=5A, Cload=1 µF ceramic || 10µF tantalum, Ta=+25°C., ScopeBW=20MHz)

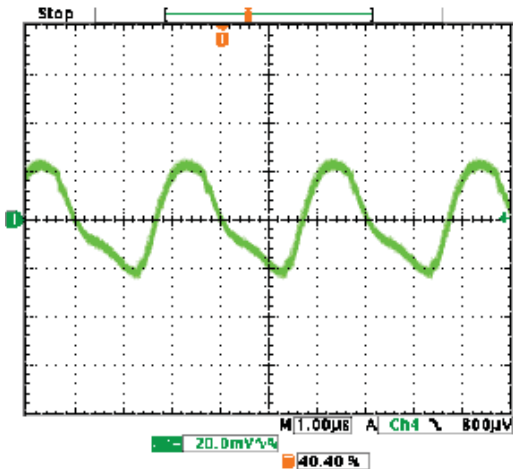

UEI25-120-D48 PERFORMANCE DATA

Efficiency vs. Line Voltage and Load Current @ 25°C

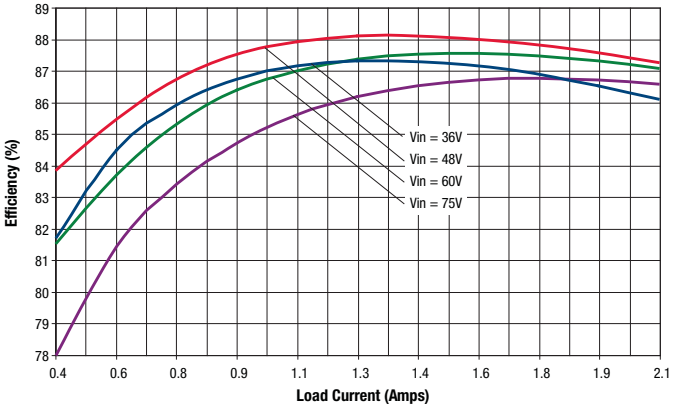

Power Dissipation vs. Load Current @ 25°C

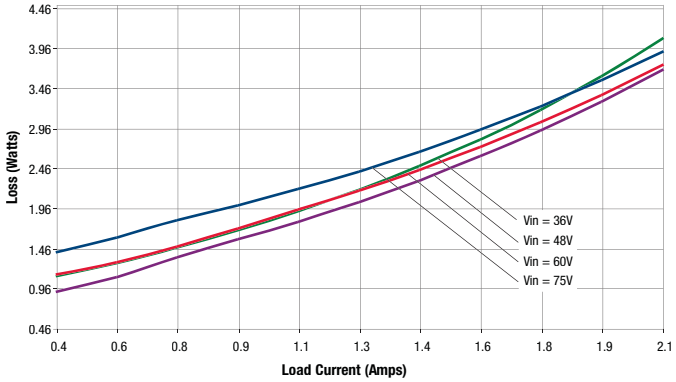

Maximum Current Temperature Derating @sea level
(V_{IN} = 36V, airflow is from pin 1 to pin 3)

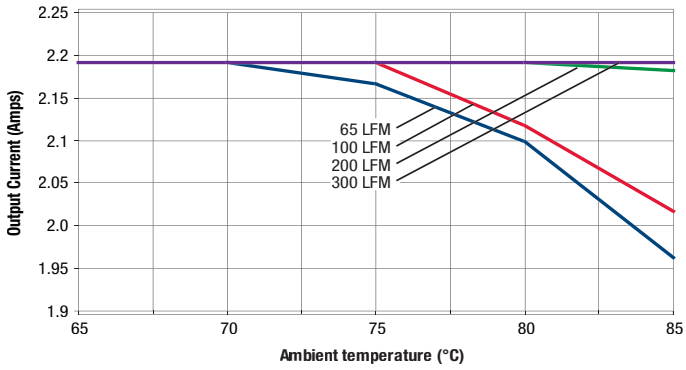

Maximum Current Temperature Derating @sea level
(V_{IN} = 48V, airflow is from pin 1 to pin 3)

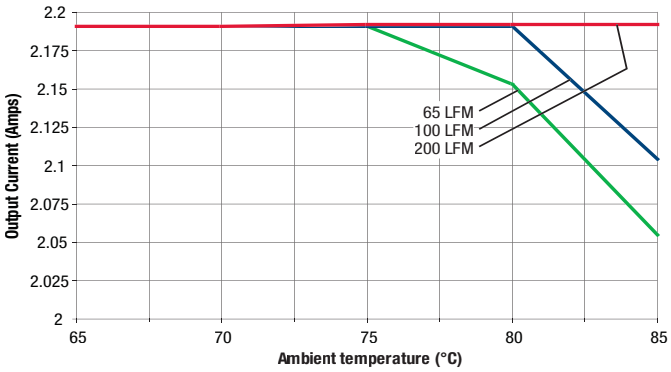

Maximum Current Temperature Derating @sea level
(V_{IN} = 60V, airflow is from pin 1 to pin 3)

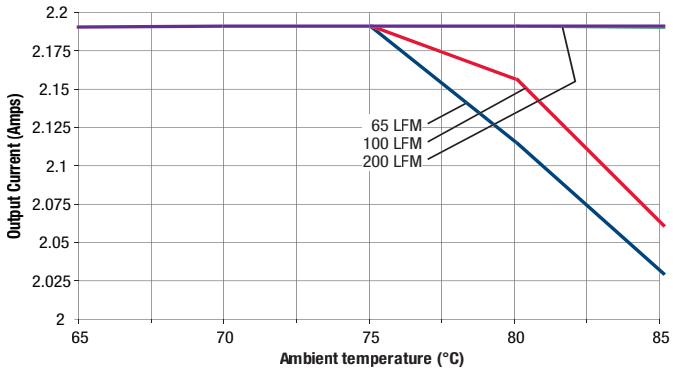

Thermal image with "hot spot" at full load current with 65°C ambient, air flowing at minimal rate of 65 LFM. Air is flowing across the converter from +Vo to -Vo at 48V input. Identifiable and recommended maximum value to be verified in application.

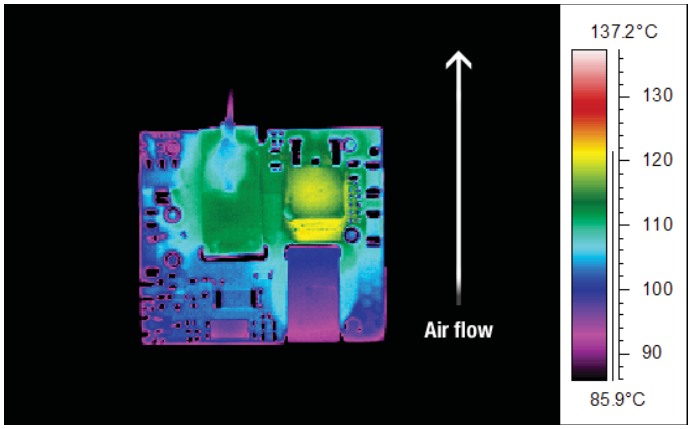

UEI25-120-D48 PERFORMANCE DATA, CONTINUED

Maximum Current Temperature Derating @sea level
(V_{IN} = 75V, airflow is from pin 1 to pin 3)

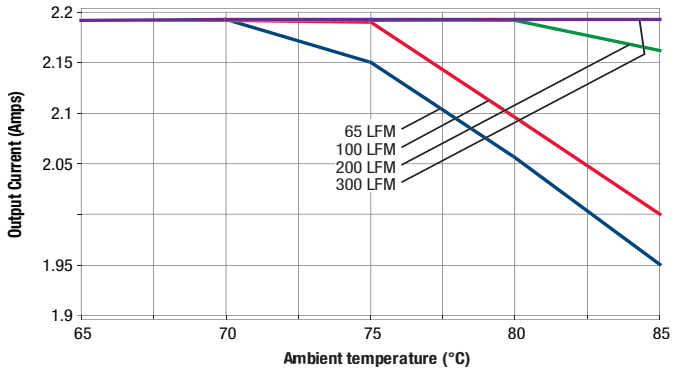

On/Off ENABLE DELAY (Vin=48, Vout=nom, Iout=0A, Cload=0uF, Ta=+25°C., ScopeBW=20Mhz) Trace 1= Enable. Trace 4=Vout

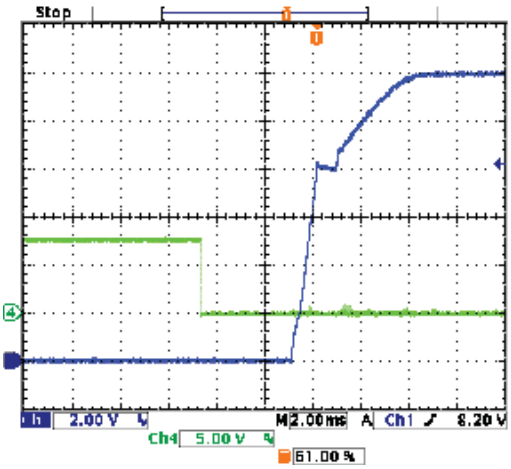

On/Off ENABLE DELAY (Vin=48, Vout=nom, Iout=2.1A, Cload=0uF, Ta=+25°C., ScopeBW=20Mhz) Trace 1= Enable. Trace 4=Vout

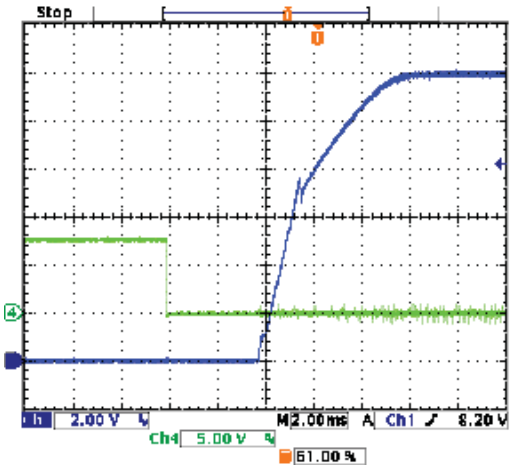

On/Off ENABLE DELAY (Vin=48, Vout=nom, Iout=2.1A, Cload=2000uF, Ta=+25°C., ScopeBW=20Mhz) Trace 1= Enable. Trace 4=Vout

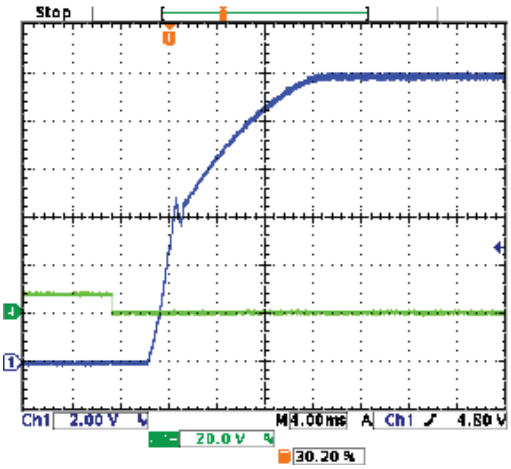

Stepload Transient Response (Vin = 48V, Iout = 25-75-25% of Imax, Cout = 1&10µF, Ta = +25°C, Scope BW = 20MHz)

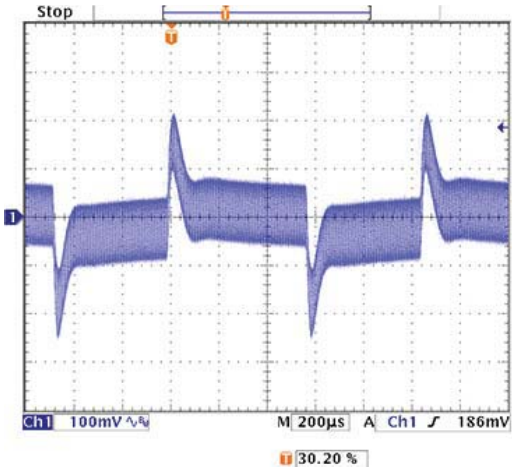

Output Ripple and Noise (Vin=48V, Iout = 2.1A, Cout = 1&10µF, Ta = +25°C, Scope BW = 20MHz)

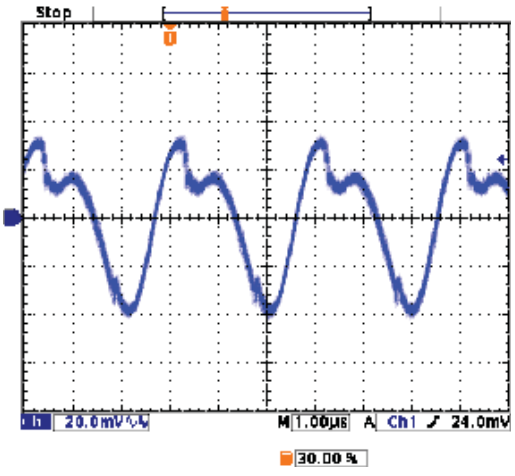

TECHNICAL NOTES

Input Fusing

Certain applications and/or safety agencies may require fuses at the inputs of power conversion components. Fuses should also be used when there is the possibility of sustained input voltage reversal which is not current-limited. For greatest safety, we recommend a fast blow fuse installed in the ungrounded input supply line.

The installer must observe all relevant safety standards and regulations. For safety agency approvals, install the converter in compliance with the end-user safety standard.

Input Reverse-Polarity Protection

If the input voltage polarity is reversed, an internal diode will become forward biased and likely draw excessive current from the power source. If this source is not current-limited or the circuit appropriately fused, it could cause permanent damage to the converter.

Input Under-Voltage Shutdown and Start-Up Threshold

Under normal start-up conditions, converters will not begin to regulate properly until the rising input voltage exceeds and remains at the Start-Up Threshold Voltage (see Specifications). Once operating, converters will not turn off until the input voltage drops below the Under-Voltage Shutdown Limit. Subsequent restart will not occur until the input voltage rises again above the Start-Up Threshold. This built-in hysteresis prevents any unstable on/off operation at a single input voltage.

Users should be aware however of input sources near the Under-Voltage Shutdown whose voltage decays as input current is consumed (such as capacitor inputs), the converter shuts off and then restarts as the external capacitor recharges. Such situations could oscillate. To prevent this, make sure the operating input voltage is well above the UV Shutdown voltage AT ALL TIMES.

Start-Up Delay

Assuming that the output current is set at the rated maximum, the Vin to Vout Start-Up Delay (see Specifications) is the time interval between the point when the rising input voltage crosses the Start-Up Threshold and the fully loaded regulated output voltage enters and remains within its specified regulation band. Actual measured times will vary with input source impedance, external input capacitance, input voltage slew rate and final value of the input voltage as it appears at the converter.

These converters include a soft start circuit to moderate the duty cycle of the PWM controller at power up, thereby limiting the input inrush current.

The On/Off Remote Control interval from inception to V_{OUT} regulated assumes that the converter already has its input voltage stabilized above the Start-Up Threshold before the On command. The interval is measured from the On command until the output enters and remains within its specified regulation band. The specification assumes that the output is fully loaded at maximum rated current.

Input Source Impedance

These converters will operate to specifications without external components, assuming that the source voltage has very low impedance and reasonable input voltage regulation. Since real-world voltage sources have finite impedance, performance is improved by adding external filter components. Sometimes only a small ceramic capacitor is sufficient. Since it is difficult to totally characterize all applications, some experimentation may be needed. Note that external input capacitors must accept high speed switching currents.

Because of the switching nature of DC/DC converters, the input of these converters must be driven from a source with both low AC impedance and adequate DC input regulation. Performance will degrade with increasing input inductance. Excessive input inductance may inhibit operation. The DC input regulation specifies that the input voltage, once operating, must never degrade below the Shut-Down Threshold under all load conditions. Be sure to use adequate trace sizes and mount components close to the converter.

I/O Filtering, Input Ripple Current and Output Noise

All models in this converter series are tested and specified for input reflected ripple current and output noise using designated external input/output components, circuits and layout as shown in the figures below. External input capacitors (C_{IN} in the figure) serve primarily as energy storage elements, minimizing line voltage variations caused by transient IR drops in the input conductors. Users should select input capacitors for bulk capacitance (at appropriate frequencies), low ESR and high RMS ripple current ratings. In the figure below, the C_{BUS} and L_{BUS} components simulate a typical DC voltage bus. Your specific system configuration may require additional considerations. Please note that the values of C_{IN}, L_{BUS} and C_{BUS} may vary according to the specific converter model.

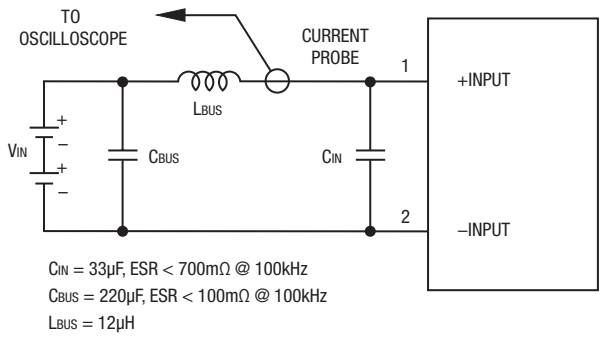

Figure 2. Measuring Input Ripple Current

In critical applications, output ripple and noise (also referred to as periodic and random deviations or PARD) may be reduced by adding filter elements such as multiple external capacitors. Be sure to calculate component temperature rise from reflected AC current dissipated inside capacitor ESR. In figure 3, the two copper strips simulate real-world printed circuit impedances between the power supply and its load. In order to minimize circuit errors and standardize tests between units, scope measurements should be made using BNC connectors or the probe ground should not exceed one half inch and soldered directly to the fixture.

Floating Outputs

Since these are isolated DC/DC converters, their outputs are “floating” with respect to their input. The essential feature of such isolation is ideal ZERO CURRENT FLOW between input and output. Real-world converters however do exhibit tiny leakage currents between input and output (see Specifications). These leakages consist of both an AC stray capacitance coupling component and a DC leakage resistance. When using the isolation feature, do not allow the isolation voltage to exceed specifications. Otherwise the converter may be damaged. Designers will normally use the negative output (-Output) as

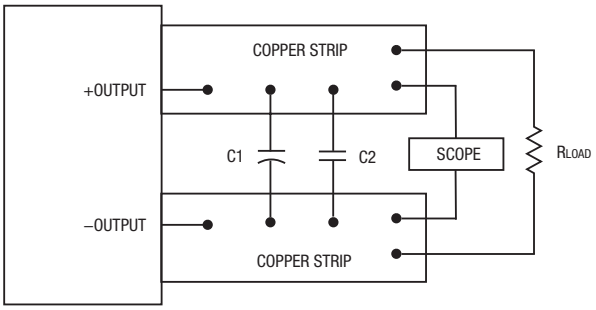

C1 = 1µF CERAMIC
C2 = 10µF LOW ES
LOAD 2-3 INCHES (51-76mm) FROM MODULE

Figure 3. Measuring Output Ripple and Noise (PARD)

the ground return of the load circuit. You can however use the positive output (+Output) as the ground return to effectively reverse the output polarity.

Minimum Output Loading Requirements

These converters employ a synchronous rectifier design topology. All models regulate within specification and are stable from 0% load to full load conditions, unless otherwise specified. Operation under no load will not damage the converter but might, however, slightly increase regulation, output ripple, and noise.

Thermal Shutdown

To protect against thermal over-stress, these converters include thermal shutdown circuitry. If environmental conditions cause the temperature of the DC/DC's to rise above the Operating Temperature Range up to the shutdown temperature, an on-board electronic temperature sensor will power down the unit. When the temperature decreases below the turn-on threshold, the converter will automatically restart. There is a small amount of hysteresis to prevent rapid on/off cycling. CAUTION: If you operate too close to the thermal limits, the converter may shut down suddenly without warning. Be sure to thoroughly test your application to avoid unplanned thermal shutdown.

Temperature Derating Curves

The graphs in the performance data section illustrate typical operation under a variety of conditions. The Derating curves show the maximum continuous ambient air temperature and decreasing maximum output current which is acceptable under increasing forced airflow measured in Linear Feet per Minute ("LFM"). Note that these are AVERAGE measurements. The converter will accept brief increases in temperature and/or current or reduced airflow as long as the average is not exceeded.

Note that the temperatures are of the ambient airflow, not the converter itself which is obviously running at higher temperature than the outside air. Also note that "natural convection" is defined as very low flow rates which are not using fan-forced airflow. Depending on the application, "natural convection" is usually about 30-65 LFM but is not equal to still air (0 LFM).

Murata Power Solutions makes Characterization measurements in a closed cycle wind tunnel with calibrated airflow. We use both thermocouples and an infrared camera system to observe thermal performance. As a practical matter, it is quite difficult to insert an anemometer to precisely measure airflow in most applications. Sometimes it is possible to estimate the effective airflow if you thoroughly understand the enclosure geometry, entry/exit orifice areas and the fan flowrate specifications.

CAUTION: If you exceed these Derating guidelines, the converter may have an unplanned Over Temperature shut down. Also, these graphs are all collected near Sea Level altitude. Be sure to reduce the derating for higher altitude.

Output Overvoltage Protection (OVP)

This converter monitors its output voltage for an over-voltage condition using an on-board electronic comparator. The signal is optically coupled to the primary side PWM controller. If the output exceeds OVP limits, the sensing circuit will power down the unit, and the output voltage will decrease. After a time-out period, the PWM will automatically attempt to restart, causing the output voltage to ramp up to its rated value. It is not necessary to power down and reset the converter for this automatic OVP-recovery restart.

If the fault condition persists and the output voltage climbs to excessive levels, the OVP circuitry will initiate another shutdown cycle. This on/off cycling is referred to as "hiccup" mode.

Output Fusing

The converter is extensively protected against current, voltage and temperature extremes. However, your application circuit may need additional protection. In the extremely unlikely event of output circuit failure, excessive voltage could be applied to your circuit. Consider using an appropriate external protection.

Output Current Limiting

As soon as the output current increases to approximately its overcurrent limit, the DC/DC converter will enter a current-limiting mode. The output voltage will decrease proportionally with increases in output current, thereby maintaining a somewhat constant power output. This is commonly referred to as power limiting.

Current limiting inception is defined as the point at which full power falls below the rated tolerance. See the Performance/Functional Specifications. Note particularly that the output current may briefly rise above its rated value. This enhances reliability and continued operation of your application. If the output current is too high, the converter will enter the short circuit condition.

Output Short Circuit Condition

When a converter is in current-limit mode, the output voltage will drop as the output current demand increases. If the output voltage drops too low, the magnetically coupled voltage used to develop PWM bias voltage will also drop, thereby shutting down the PWM controller. Following a time-out period, the PWM will restart, causing the output voltage to begin rising to its appropriate value. If the short-circuit condition persists, another shutdown cycle will initiate. This on/off cycling is called "hiccup mode." The hiccup cycling reduces the average output current, thereby preventing excessive internal temperatures.

Trimming the Output Voltage

The Trim input to the converter allows the user to adjust the output voltage over the rated trim range (please refer to the Specifications). In the trim equations and circuit diagrams that follow, trim adjustments use a single fixed resistor connected between the Trim input and either Vout pin. Trimming resistors should have a low temperature coefficient (±100 ppm/°C or less) and be mounted close to the converter. Keep leads short. If the trim function is not used, leave the trim unconnected. With no trim, the converter will exhibit its specified output voltage accuracy.

There are two CAUTIONs to observe for the Trim input:

CAUTION: To avoid unplanned power down cycles, do not exceed EITHER the maximum output voltage OR the maximum output power when setting the trim. If the output voltage is excessive, the OVP circuit may inadvertantly shut down the converter. If the maximum power is exceeded, the converter may enter current limiting. If the power is exceeded for an extended period, the converter may overheat and encounter overtemperature shut down.

CAUTION: Be careful of external electrical noise. The Trim input is a senstive input to the converter's feedback control loop. Excessive electrical noise may cause instability or oscillation. Keep external connections short to the Trim input. Use shielding if needed.

Trim Equations

Trim Up	Trim Down
<Connect trim resistor between Trim and –Vout>	<Connect trim resistor between Trim and +Vout>

UEI25-033-D48	
$R_{T_{UP}}(\Omega) = \frac{12775}{V_O - 3.3} - 2050$	$R_{T_{DOWN}}(\Omega) = \frac{5110 \times (V_O - 2.5)}{3.3 - V_O} - 2050$
UEI25-050-D48	
$R_{T_{UP}}(\Omega) = \frac{12775}{V_O - 5} - 2050$	$R_{T_{DOWN}}(\Omega) = \frac{5110 \times (V_O - 2.5)}{5 - V_O} - 2050$
UEI25-120-D48	
$R_{T_{UP}}(\Omega) = \frac{25000}{V_O - 12} - 5110$	$R_{T_{DOWN}}(\Omega) = \frac{10000\ (V_O - 2.5)}{12 - V_O} - 5110$

Where Vo = Desired output voltage. Adjustment accuracy is subject to resistor tolerances and factory-adjusted output accuracy. Mount trim resistor close to converter. Use short leads.

Remote On/Off Control

On the input side, a remote On/Off Control can be specified with either positive or negative logic as follows:

Positive: Models equipped with Positive Logic are enabled when the On/Off pin is left open or is pulled high to +15VDC with respect to –VIN. An internal bias current causes the open pin to rise to +VIN. Positive-polarity devices are disabled when the On/Off is grounded or brought to within a low voltage (see Specifications) with respect to –VIN.

Negative: Models with negative polarity are on (enabled) when the On/Off is grounded or brought to within a low voltage (see Specifications) with respect to –VIN. The device is off (disabled) when the On/Off is left open or is pulled high to +15VDC Max. with respect to –VIN.

Dynamic control of the On/Off function should be able to sink the specified signal current when brought low and withstand specified voltage when brought high. Be aware too that there is a finite time in milliseconds (see Specifications) between the time of On/Off Control activation and stable, regulated output. This time will vary slightly with output load type and current and input conditions.

There are two CAUTIONs for the On/Off Control:

CAUTION: While it is possible to control the On/Off with external logic if you carefully observe the voltage levels, the preferred circuit is either an open drain/open collector transistor or a relay (which can thereupon be controlled by logic). The On/Off prefers to be set at approx. +15V (open pin) for the ON state, assuming positive logic.

CAUTION: Do not apply voltages to the On/Off pin when there is no input power voltage. Otherwise the converter may be permanently damaged.

On/Off Enable Control Ground Bounce Protection

To improve reliability, if you use a small signal transistor or other external circuit to select the Remote On/Off control, make sure to return the LO side directly to the –Vin power input on the DC/DC converter. To avoid ground bounce errors, do not connect the On/Off return to a distant ground plane or current-carrying bus. If necessary, run a separate small return wire directly to the –Vin terminal. There is very little current (typically 1-5 mA) on the On/Off control however, large current changes on a return ground plane or ground bus can accidentally trigger the converter on or off. If possible, mount the On/Off transistor or other control circuit adjacent to the converter.

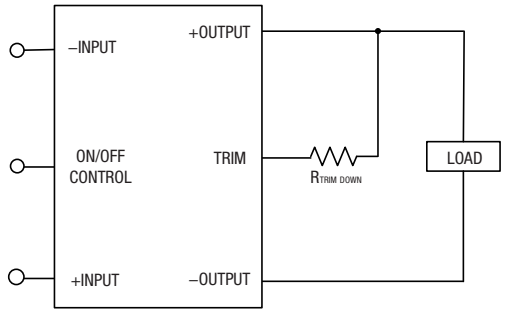

Figure 4. Trim adjustments to decrease Output Voltage using a Fixed Resistor

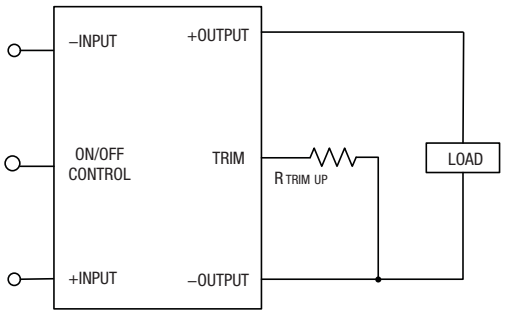

Figure 5. Trim adjustments to increase Output Voltage using a Fixed Resistor

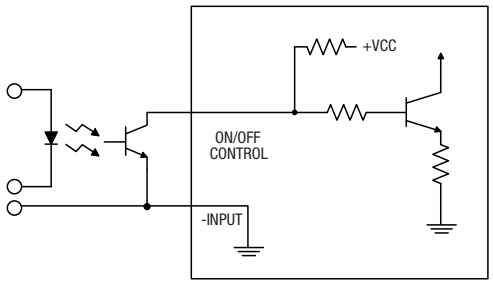

Figure 6. Driving the On/Off Control Pin (suggested circuit)

Emissions Performance

Murata Power Solutions measures its products for radio frequency emissions against the EN 55022 and CISPR 22 standards. Passive resistance loads are employed and the output is set to the maximum voltage. If you set up your own emissions testing, make sure the output load is rated at continuous power while doing the tests.

The recommended external input and output capacitors (if required) are included. Please refer to the fundamental switching frequency. All of this information is listed in the Product Specifications. An external discrete filter is installed and the circuit diagram is shown below.

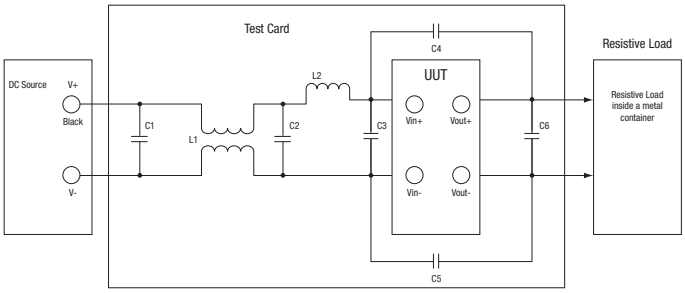

Figure 7. Conducted Emissions Test Circuit

[1] Conducted Emissions Parts List

Reference	Part Number	Description	Vendor
L1	PE-62913	1mH, 6A	Pulse
L2	NC	4.7uH, 3.6A	Murata
C1, C2	VZ Series	Electrolytic Capacitor 22ufd, 100V	Panasonic
C3	VZ Series	Qty 2 - Electrolytic Capacitor 22ufd, 100V	Panasonic
C4, C5	Unknown	3.3nF, 1500V	Unknown
C6	VZ Series	Electrolytic Capacitor 22ufd, 100V	Panasonic

[2] Conducted Emissions Test Equipment Used

- Rohde & Schwarz EMI Test Receiver (9KHz – 1000MHz) ESPC
- Rohde & Schwarz Software ESPC-1 Ver. 2.20
- OHMITE 25W – 1 Ohm resistor combinations
- DC Source Programmable DC Power Supply Model 62012P-100-50

[3] Conducted Emissions Test Results

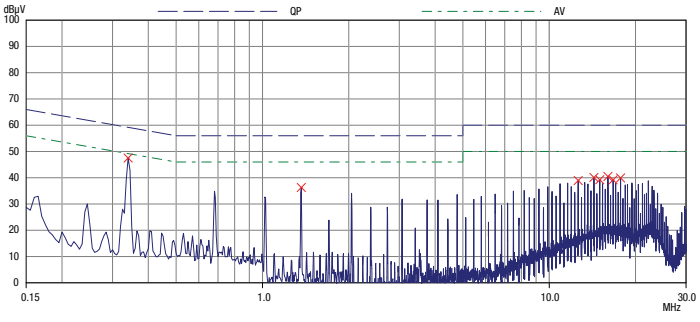

Graph 1. Conducted emissions performance with filter, Negative Line, CISPR 22, Class B, full load, for UEI25-033-D48PM-C

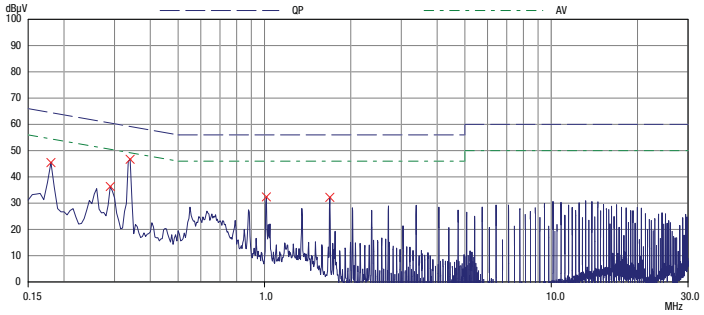

Graph 2. Conducted emissions performance with filter, Negative Line, CISPR 22, Class B, full load, for UEI25-050-D48NM-C

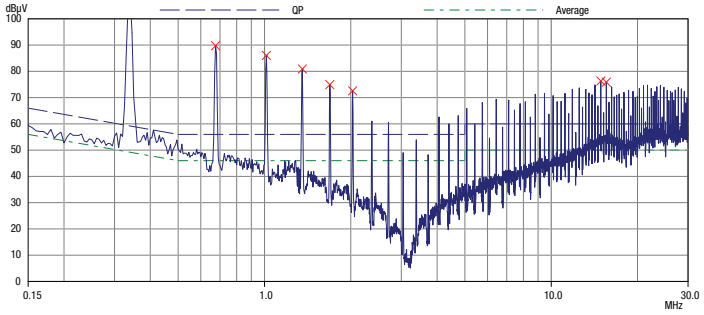

Graph 3. Conducted emissions performance without filter, Negative Line, CISPR 22, Class B, full load, for UEI25-050-D48NM-C

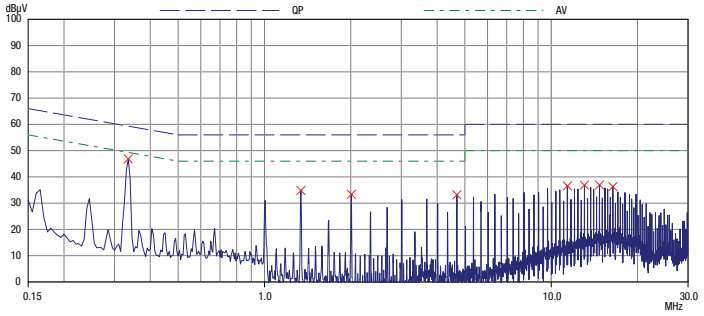

Graph 4. Conducted emissions performance with filter, Negative Line, CISPR 22, Class B, full load, for UEI25-120-D48P-C

[4] Layout Recommendations

Most applications can use the filtering which is already installed inside the converter or with the addition of the recommended external capacitors. For greater emissions suppression, consider additional filter components and/or shielding. Emissions performance will depend on the user's PC board layout, the chassis shielding environment and choice of external components. Please refer to Application Note for further discussion.

Since many factors affect both the amplitude and spectra of emissions, we recommend using an engineer who is experienced at emissions suppression.

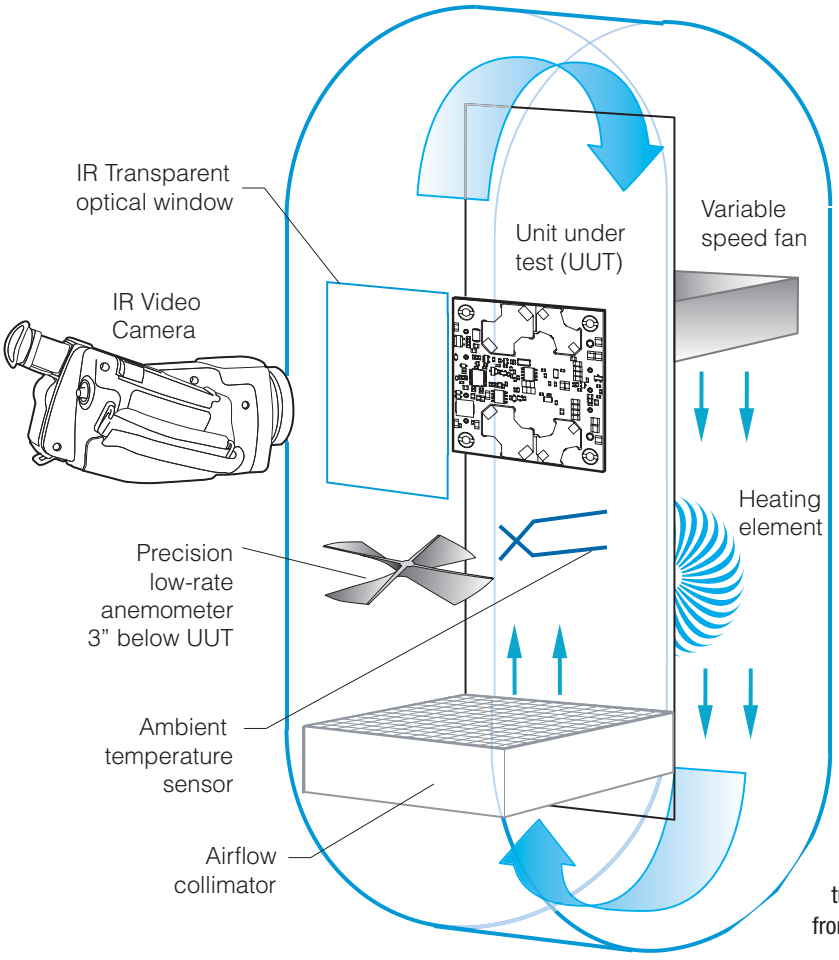

Figure 7. Vertical Wind Tunnel

Vertical Wind Tunnel

Murata Power Solutions employs a custom-designed enclosed vertical wind tunnel, infrared video camera system and test instrumentation for accurate airflow and heat dissipation analysis of power products. The system includes a precision low flow-rate anemometer, variable speed fan, power supply input and load controls, temperature gauges and adjustable heating element.

The IR camera can watch thermal characteristics of the Unit Under Test (UUT) with both dynamic loads and static steady-state conditions. A special optical port is used which is transparent to infrared wavelengths. The computer files from the IR camera can be studied for later analysis.

Both through-hole and surface mount converters are soldered down to a host carrier board for realistic heat absorption and spreading. Both longitudinal and transverse airflow studies are possible by rotation of this carrier board since there are often significant differences in the heat dissipation in the two airflow directions. The combination of both adjustable airflow, adjustable ambient heat and adjustable Input/Output currents and voltages mean that a very wide range of measurement conditions can be studied.

The airflow collimator mixes the heat from the heating element to make uniform temperature distribution. The collimator also reduces the amount of turbulence adjacent to the UUT by restoring laminar airflow. Such turbulence can change the effective heat transfer characteristics and give false readings. Excess turbulence removes more heat from some surfaces and less heat from others, possibly causing uneven overheating.

Both sides of the UUT are studied since there are different thermal gradients on each side. The adjustable heating element and fan, built-in temperature gauges and no-contact IR camera mean that power supplies are tested in real-world conditions.

Murata Power Solutions, Inc. makes no representation that the use of its products in the circuits described herein, or the use of other technical information contained herein, will not infringe upon existing or future patent rights. The descriptions contained herein do not imply the granting of licenses to make, use, or sell equipment constructed in accordance therewith. Specifications are subject to change without notice.
© 2011 Murata Power Solutions, Inc.