Online data sheet



UE11-4DX2D30.5

UE11-4DX

SAFETY RELAYS

SICK
Sensor Intelligence.



Illustration may differ

Ordering information

Type	Part no.
UE11-4DX2D30.5	6024921

Other models and accessories → www.sick.com/UE11-4DX

Detailed technical data

Safety-related parameters

Safety integrity level	SIL2 (IEC 61508) [1] SILCL2 (EN 62061) [1]
Category	Category 3 (EN ISO 13849) [1]
Performance level	PL d (EN ISO 13849) [1]
B_{10d} parameter	1 x 10^6 switching cycles (AC-15, 230 V, I = 0.5 A) 3.5 x 10^5 switching cycles (DC-13, 24 V, I = 2 A) 1.2 x 10^6 switching cycles (DC-13, 24 V, I = 0.5 A)
PFH_D (mean probability of a dangerous failure per hour)	2.0 x 10^{-7} (EN ISO 13849)
T_M (mission time)	4 years (EN ISO 13849)

[1] If the feedback current path Y1 - Y2 (external device monitoring) is monitored using an appropriate main unit.

Interfaces

Connection type	Fixed screw terminals
Number of enable current (N/O) contacts	4, relevant for safety

Electrical data

Operating data

Voltage supply	A1, A2
Output circuit > 25 V AC / 60 V DC	PELV
Output circuit ≤ 25 V AC / 60 V DC	PELV or SELV
Supply voltage V_S	A1, A2 24 V DC (20.4 V DC ... 26.4 V DC)
Residual ripple	(≤ 2.4 V_{pp}) [1]

[1] In DC operation, within the limits of V_S.

Power consumption	(≤ 1 W (DC))
Overvoltage category	III (see operating instructions)
Rated insulation voltage U_i	300 V AC
Rated impulse withstand voltage U_{imp}	4 kV
Test voltage	2 kV (50 Hz) (EN 60439-1)

[1] In DC operation, within the limits of V_S.

Electrical output circuits: 17/18, 27/28, 37/38, 47/48, 55/56, 65/66, Y1/Y2

Off-delay time	0.5 s
Number of enable current (N/O) contacts	4, relevant for safety
Contactor monitoring contact	10 V DC ... 24 V DC
Number of signalling current (N/C) contacts	2, not safety-relevant
Number of contactor monitoring (N/C) contacts	1, external device monitoring (EDM)
Contact type	Positively driven
Contact material	Silver alloy, gold flashed
Switching voltage	
Enable current contact	10 V AC ... 230 V AC 10 V DC ... 300 V DC
Signalling current contact	10 V DC, 10 V DC ... 230 V AC, 300 V DC
Current-carrying capacity per OSSD	
Enable current contact	10 mA ... 6 A
Signalling current contact	10 mA ... 2 A
Contactor monitoring contact	10 mA ... 100 mA
Total current	≤ 12 A
Usage category	AC-15/DC-13 (EN 60947-5-1)
Rated operating current (voltage)	3 A (230 V AC) 3600 switching cycles/h 4 A (24 V DC) 360 switching cycles/h 2.5 A (24 V DC) 3600 switching cycles/h
Switching frequency	≤ 3600/h
Mechanical life (relay contacts)	1 x 10^7 switching cycles
Electrical life (relay contacts)	2 x 10^6 switching cycles

Mechanical data

Dimensions (W x H x D)	22.5 mm x 114 mm x 96.5 mm
Weight	0.2 kg

Classifications

ECl@ss 5.0	27371990
ECl@ss 5.1.4	27371990
ECl@ss 6.0	27371819
ECl@ss 6.2	27371819
ECl@ss 7.0	27371819
ECl@ss 8.0	27371819
ECl@ss 8.1	27371819

ECl@ss 9.0	27371819
ETIM 5.0	EC001449
ETIM 6.0	EC001449
UNSPSC 16.0901	41113704

Dimensional drawing (Dimensions in mm (inch))

Safety relay

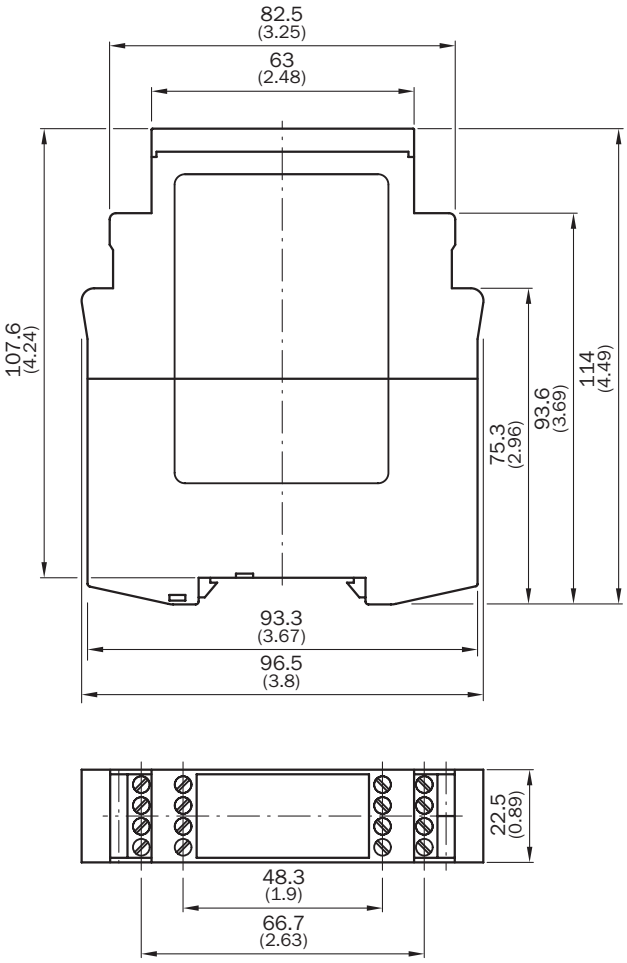

Connection diagram

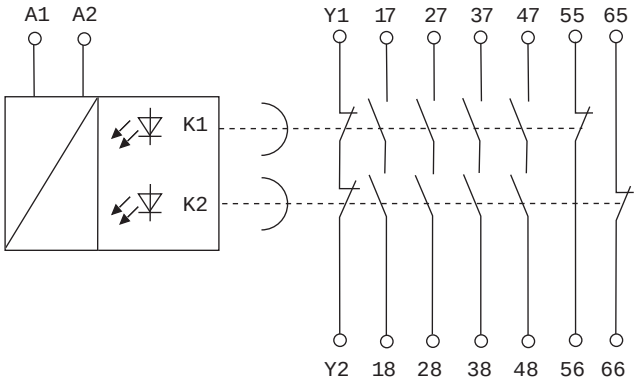

SICK AT A GLANCE

SICK is one of the leading manufacturers of intelligent sensors and sensor solutions for industrial applications. A unique range of products and services creates the perfect basis for controlling processes securely and efficiently, protecting individuals from accidents and preventing damage to the environment.

We have extensive experience in a wide range of industries and understand their processes and requirements. With intelligent sensors, we can deliver exactly what our customers need. In application centers in Europe, Asia and North America, system solutions are tested and optimized in accordance with customer specifications. All this makes us a reliable supplier and development partner.

Comprehensive services complete our offering: SICK LifeTime Services provide support throughout the machine life cycle and ensure safety and productivity.

For us, that is “Sensor Intelligence.”

WORLDWIDE PRESENCE:

Contacts and other locations –www.sick.com