ULTRALIFE
BATTERY & ENERGY PRODUCTS

UBBL26
Technical Datasheet



Features

- Off-the-shelf convenience
- Wire or connector terminals
- Full circuit protection
- Meets all UN transportation testing
- Long cycle life
- High energy density
- Wide operating temperature range
- Lightweight

Applications

- Portable electronics
- Hand-held devices
- Medical equipment
- Back-up power

Accessories Optional

- UCH0039-S: Wall Wart charger (U.S.)
- UCH0039-I: Wall Wart charger (International)
- UCA0102-01: Interface cable for UBBL26-FL
- UCA0102-02: Interface cable for UBBL26-C1

Technical Specifications	
Part No.	UBBL26-FL or UBBL26-C1
Voltage Range	12.0 to 16.8V
Average Voltage	14.4V
Capacity	4.8Ah @ C/5 Rate @ 23°C±2°C
Max. Discharge	3.5A continuous
PTC	Rated for 4.5A Hold Current @ 20°C
Energy	69.0Wh
Energy Density	182Wh/kg, 449Wh/l
Weight	~393g
Cycle Life	> 300 cycles @ C/5 to 80% of inital capacity
Memory	No Memory Effect
Operating Temperature	-20°C to 60°C
Storage Temperature	-20°C to 50°C
Self-Discharge	< 10% per month
Exterior/Housing	PVC Shrink Wrap
Terminals/Connector	FL: 22 AWG wire leads Red (+), Black (-) C1: JST Connector VHR-2N
Safety	Material Safety Datasheet - MSDS041 Safety Guide UBI-5112
Transportation	Excepted from regulations for packages with gross mass of 10kg or less (see note)
Protection Circuit Module and Fuses	Over Voltage Limit: 4.325±0.05V (per cell) Under Voltage Limit: 2.30±0.1V (per cell) Over Discharge Current Limit: 3.6 - 6.0A
Charging	Recommended charge rate is 932mA to 16.8V in a temperature range of 0°C to 45°C. Hold at 16.8V until current declines to 100mA. Maximum charge rate is 3.2A @ 23°C±2°C.
Note	A complete description of transportation regulations, lithium weights and transportation classifications is available on the Ultralife website.

Newark, New York | 315-332-7100 | Fax: 315-331-7800
©2011 Ultralife Corporation • www.ultralifecorp.com • All information is subject to change without notice.
The information contained herein is for reference only and does not constitute a warranty of performance. • 11 NOV 11 UBI-05202 Rev: D

Dimensions

UBBL26-FL: Wire Leads
UBBL26-C1: Connector

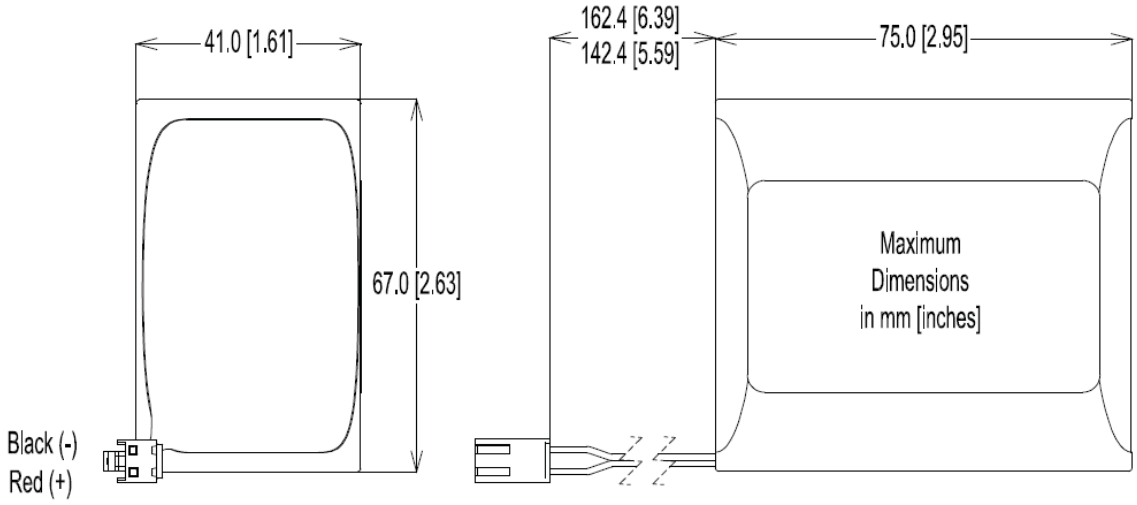

Performance Graphs

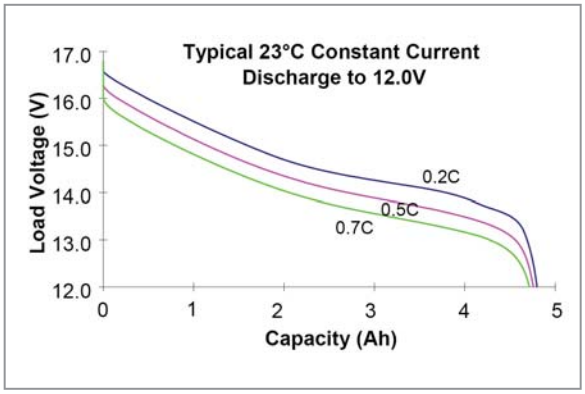

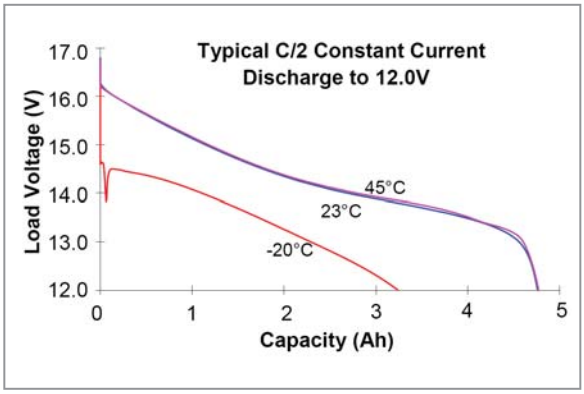

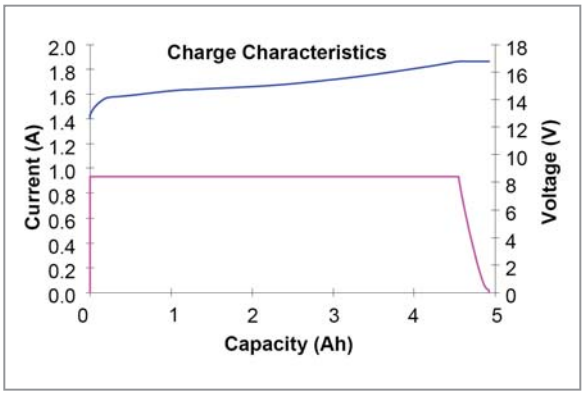

©2011 Ultralife Corporation • www.ultralifecorp.com • All information is subject to change without notice.
The information contained herein is for reference only and does not constitute a warranty of performance.