1-CELL LITHIUM-ION/POLYMER BATTERY PROTECTION IC

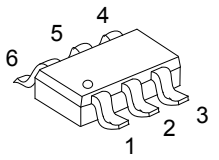

SOT-26

■ DESCRIPTION

The UTC **UB261** is a series of lithium-ion/lithium-polymer rechargeable battery protection ICs incorporating high accuracy voltage detection circuits and delay circuits.

The UTC **UB261** is suitable for protection of single cell lithium-ion / lithium polymer battery packs from overcharge, over discharge and over current.

The ultra-small package and less required external components make it ideal to integrate the UTC **UB261** into the limited space of battery pack.

■ FEATURES

* Wide Supply Voltage Range: V_{DD}=1.5V~8.0V
* Ultra-Low Quiescent Current: I_{OPE}=3.0μA (V_{DD}=3.5V)
* Ultra-Low Power-Down Current: I_{PDN}=0.2μA (V_{DD}=1.5V)
* Overcharge Detection Voltage: V_{CU}=3.9V~4.4V
* Overcharge Release Voltage: V_{CL}=3.8V~4.4V
* Over Discharge Release Voltage: V_{DL}=2.0V~3.0V
* Over Discharge Release Voltage: V_{DU}=2.0V~3.4V
* Over Current 1 Detection Voltage: V_{IOV1}=0.05V~0.30V
* Over Current 2 Detection Voltage: V_{IOV2}=0.5V (Fixed)
* Short Circuit Detection Voltage: V_{SHORT}=1.2V (Fixed)
* Charger Detection Voltage: V_{CHA}=-0.7V (Fixed)
* Delay Times are Generated by an Internal Circuit. (External Capacitors are Unnecessary.)

■ ORDERING INFORMATION

Ordering Number		Package	Packing
Lead Free	Halogen Free		
UB261L-xx-AG6-R	UB261G-xx-AG6-R	SOT-26	Tape Reel

Note: xx: Output Voltage, refer to Marking Information.

UB261L-xx-AG6-R

(1) Packing Type	(1) R: Tape Reel
(2) Package Type	(2) AG6: SOT-26
(3) Output Voltage Code	(3) xx: Refer to Marking Information
(4) Lead Plating	(4) L: Lead Free, G: Halogen Free

Copyright © 2013 Unisonic Technologies Co., Ltd

■ MARKING INFORMATION

PACKAGE	VOLTAGE CODE (Note)	MARKING
SOT-26	XX	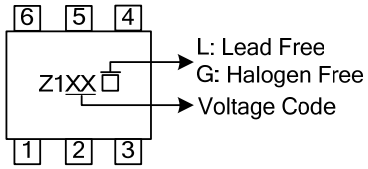

Note: Refer to Serial Code List

■ SERIAL CODE LIST

Model	Code	Overcharge Detection Voltage [V_{CU}](V)	Overcharge Release Voltage [V_{CL}](V)	Over discharge Detection Voltage [V_{DL}](V)	Over discharge Release Voltage [V_{DU}](V)	Over Current Detection Voltage [V_{IOV1}](V)
UB261	AA	4.325	4.075	2.50	2.90	0.150
	AB	4.325	4.075	2.50	2.90	0.100
	AC	4.300	4.200	2.40	3.00	0.200
	AD	4.280	4.180	2.50	3.00	0.150
	AE	4.280	4.080	2.30	2.40	0.100
	AF	4.275	4.075	2.50	2.90	0.150
	AG	4.250	4.150	2.40	3.00	0.100
	AH	4.200	4.100	2.80	2.90	0.150
	AI	4.100	3.850	2.50	2.90	0.150

■ PIN CONFIGURATION

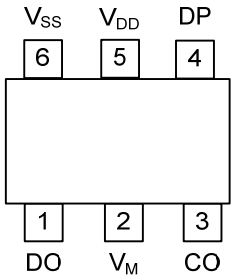

■ PIN DESCRIPTION

PIN NO.	PIN NAME	DESCRIPTION
1	DO	For discharge control: FET gate connection pin
2	V_M	For current sense and charger detection input pin
3	CO	For charge control: FET gate connection pin
4	DP	Test pin for delay time measurement
5	V_{DD}	Positive power input
6	V_{SS}	Negative power input

■ BLOCK DIAGRAM

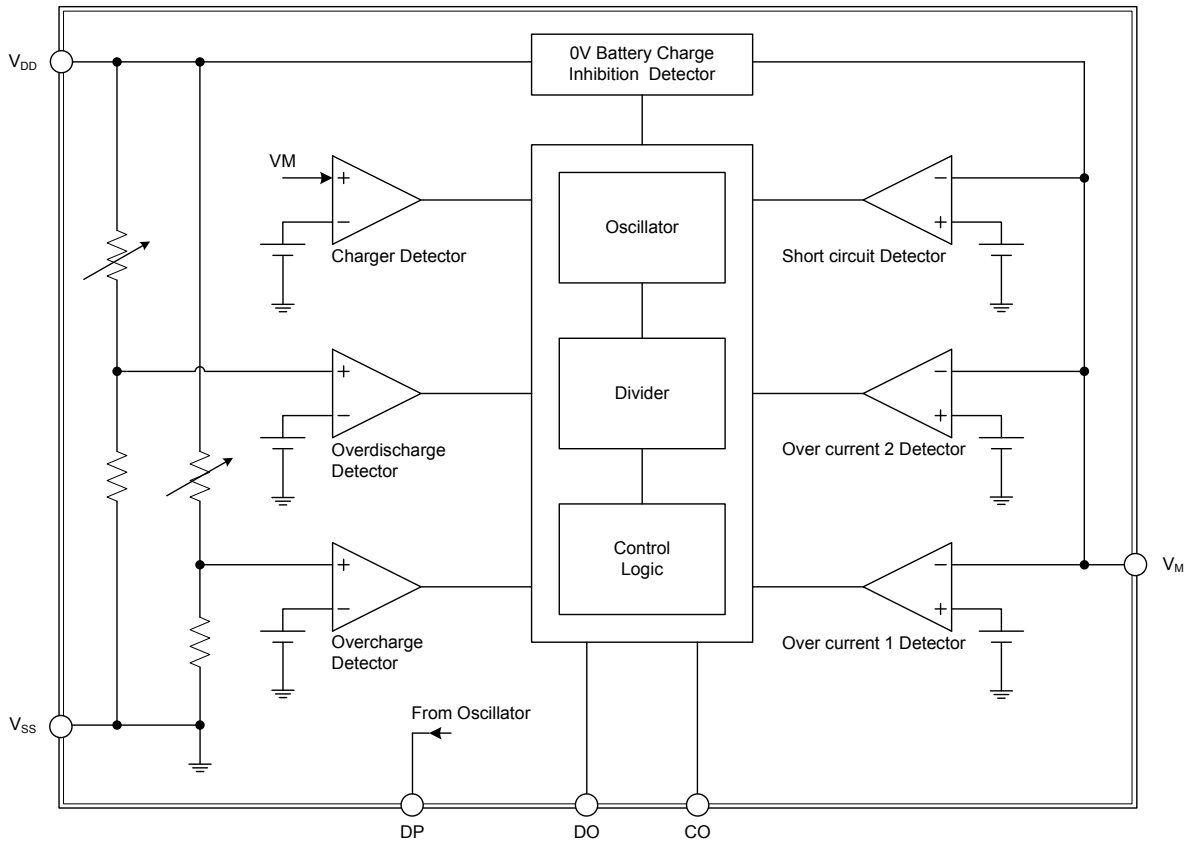

■ ABSOLUTE MAXIMUM RATING (V_{SS}=0V, T_A=25°C unless otherwise specified)

PARAMETER	SYMBOL	RATINGS	UNIT
Input Voltage Between V_{DD} and V_{SS} (Note 2)	V_{DD}	V_{SS}-0.3 ~ V_{SS}+12	V
CO Output Pin Voltage	V_{CO}	V_{DD}-12 ~ V_{DD}+0.3	V
DO Output Pin Voltage	V_{DO}	V_{SS}-0.3 ~ V_{DD}+0.3	V
V_M Input Pin Voltage	V_M	V_{DD}-14 ~ V_{DD}+0.3	V
Ambient Operating Temperature	T_{OPR}	-40 ~ +85	°C
Storage Temperature	T_{STG}	-55 ~ +125	°C

Notes: 1. Absolute maximum ratings are those values beyond which the device could be permanently damaged. Absolute maximum ratings are stress ratings only and functional device operation is not implied.
2. Pulse (μsec) noise exceeding the above input voltage (V_{SS}+12V) may cause damage to the IC.

■ ELECTRICAL CHARACTERISTICS (V_{SS}=0V, T_A=25°C unless otherwise specified)

PARAMETER	SYMBOL	TEST CONDITIONS	MIN	TYP	MAX	UNIT
CURRENT CONSOMPTION						
Supply Current	I_{OPE}	V_{DD}=3.5V, V_M=0V		3.0	8.0	μA
Power-Down Current	I_{PDN}	V_{DD}=V_M=1.5V		0.2	0.5	μA
OPERATING VOLTAGE						
Operating Voltage Between V_{DD}-pin and V_{SS}-pin	V_{DS1}		1.5		8	V
Operating Voltage Between V_{DD}-pin and V_M-pin	V_{DS2}		1.5		10	V
DETECTION VOLTAGE						
Overcharge Detection Voltage	V_{CU}		V_{CU}-0.050	V_{CU}	V_{CU}+0.050	V
Overcharge Release Voltage	V_{CL}		V_{CL}-0.050	V_{CL}	V_{CL}+0.050	V
Overdischarge Detection Voltage	V_{DL}		V_{DL}-0.100	V_{DL}	V_{DL}+0.100	V
Overdischarge Release Voltage	V_{DU}		V_{DU}-0.100	V_{DU}	V_{DU}+0.100	V
Over Current 1 Detection Voltage	V_{IOV1}	V_{DD}=3.5V	V_{IOV1}-0.03	V_{IOV1}	V_{IOV1}+0.03	V
Over Current 2 Detection Voltage	V_{IOV2}	V_{DD}=3.5V	0.35	0.50	0.65	V
Load Short Circuit Detection Voltage	V_{SHORT}		0.5	1.2	1.7	V
Charger Detection Voltage	V_{CHA}	V_{DU}≠V_{DL}	-1.6	-0.7	-0.2	V
0V BATTERY CHARGE VOLTAGE						
0V Battery Charge Inhibition Battery Voltage	V_{0INH}			0.9	1.8	V
INTERNAL RESISTANCE						
Resistance between VM-pin and V_{DD}-pin	R_{VMD}	V_{DD}=1.8V, V_M=0V	100	300	900	kΩ
Resistance between VM-pin and V_{SS}-pin	R_{VMS}	V_{DD}=3.5V, V_M=1.0V	10	30	70	kΩ
OUTPUT RESISTANCE						
CO-pin Resistance “H”	R_{COH}	V_{CO}=3.0V, V_{DD}=3.5V, V_M=0V		5	10	kΩ
CO-pin Resistance “L”	R_{COL}	V_{CO}=0.5V, V_{DD}=4.5V, V_M=0V		5	10	kΩ
DO-pin Resistance “H”	R_{DOH}	V_{DO}=3.0V, V_{DD}=3.5V, V_M=0V		5	10	kΩ
DO-pin Resistance “L”	R_{DOL}	V_{DO}=0.5V, V_{DD}=V_M=1.8V		5	10	kΩ
DELAY TIME						
Overcharge Detection Delay Time	t_{CU}		0.9	1.2	1.5	s
Overdischarge Detection Delay Time	t_{DL}		110	150	190	ms
Over Current 1 Detection Delay Time	t_{IOV1}	V_{DD}=3.5V	6	9	12	ms
Over Current 2 Detection Delay Time	t_{IOV2}	V_{DD}=3.5V	1	2.2	3.2	ms
Short Circuit Detection Delay Time	t_{SHORT}		120	300	380	μs

■ OPERATION

1. Normal Condition

The **UTC UB261** series monitors the voltage of the battery connected between V_{DD} pin and V_{SS} pin and the voltage difference between V_M pin and V_{SS} pin to control charging and discharging. When the battery voltage is in the range from the overdischarge detection voltage (V_{DL}) to the overcharge detection voltage (V_{CU}), and the V_M pin voltage is in the range from the charger detection voltage (V_{CHA}) to the overcurrent 1 detection voltage (V_{IOV1}), the IC turns both the charging and discharging control FETs on. This condition is called the normal condition, and in this condition charging and discharging can be carried out freely.

Note: When a battery is connected to the IC for the first time, discharging may not be enabled. In this case, short the V_M pin and V_{SS} pin or connect the charger to restore the normal condition.

2. Overcurrent Condition

When a battery in the normal status is in the status where the voltage of the V_M pin is equal to or higher than the overcurrent detection voltage because the discharge current is higher than the specified value and the status lasts for the overcurrent detection delay time, the discharge control FET is turned off and discharging is stopped. This status is called the overcurrent status. In the overcurrent status, the V_M and V_{SS} pins are shorted by the resistor between V_M and V_{SS} (R_{VMS}) in the IC. However, the voltage of the V_M pin is at the V_{DD} potential due to the load as long as the load is connected. When the load is disconnected, the V_M pin returns to the V_{SS} potential. This IC detects the status when the impedance between the EB+ pin and EB- pin (Refer to the typical application circuit) increases and is equal to the impedance that enables automatic restoration and the voltage at the V_M pin returns to overcurrent detection voltage 1 (V_{IOV1}) or lower and the overcurrent status is restored to the normal status.

Note: The impedance that enables automatic restoration varies depending on the battery voltage and the set value of overcurrent 1 detection voltage.

3. Overcharge Condition

When the battery voltage becomes higher than the overcharge detection voltage (V_{CU}) during charging under the normal condition and the detection continues for the overcharge detection delay time (t_{CU}), the **UTC UB261** series turns the charging control FET off to stop charging. This condition is called the overcharge condition. The overcharge condition is released by the following two cases:

(1) When the battery voltage falls below the overcharge release voltage (V_{CL}), the **UTC UB261** series turns the charging control FET on and turns to the normal condition.

(2) When a load is connected and discharging starts, the **UTC UB261** series turns the charging control FET on and returns to the normal condition. Just after the load is connected and discharging starts, the discharging current flows through the parasitic diode in the charging control FET. At this moment the V_M pin potential becomes Vf, the voltage for the parasitic diode, higher than V_{SS} level. When the battery voltage goes under the overcharge detection voltage (V_{CU}) and provided that the V_M pin voltage is higher than the overcurrent 1 detection voltage, the **UTC UB261** series releases the overcharge condition.

Note 1: If the battery is charged to a voltage higher than the overcharge detection voltage (V_{CU}) and the battery voltage does not fall below the overcharge detection voltage (V_{CU}) even when a heavy load is connected, the detection of overcurrent 1, overcurrent 2 and load shortcircuiting do not function until the battery voltage falls below over charge detection voltage (V_{CU}). Since an actual battery has an internal impedance of several dozens of mΩ, the battery voltage drops immediately after a heavy load that causes overcurrent is connected, and the detection of overcurrent 1, overcurrent 2 and load short-circuiting function.

Note 2: When a charger is connected after the overcharge detection, the overcharge condition is not released even if the battery voltage is below the overcharge release voltage (V_{CL}). The overcharge condition is released when the V_M pin voltage goes over the charger detection voltage (V_{CHA}) by removing the charger.

■ OPERATION(Cont.)

4. Overdischarge Condition

When the battery voltage falls below the overdischarge detection voltage (V_{DL}) during discharging under the normal condition and the detection continues for the overdischarge detection delay time (t_{DL}), the **UTC UB261** series turns the discharging control FET off to stop discharging. This condition is called the overdischarge condition. When the discharging control FET is turned off, the V_M pin voltage is pulled up by the resistor between V_M and V_{DD} in the IC (R_{VMD}). When the voltage difference between the V_M and V_{DD} then is 1.2V (typ.) or lower, the current consumption is reduced to the power-down current consumption (I_{PDN}). This condition is called the power-down condition.

The power-down condition is released when a charger is connected and the voltage difference between the V_M and V_{DD} becomes 1.2V (typ.) or higher. Moreover when the battery voltage becomes the overdischarge detection voltage (V_{DL}) or higher, the **UTC UB261** series turns the discharging FET on and returns to the normal condition.

5. Charger Detection

When a battery in the overdischarge condition is connected to a charger and provided that the V_M pin voltage is lower than the charger detection voltage (V_{CHA}), the **UTC UB261** series releases the overdischarge condition and turns the discharging control FET on when the battery voltage becomes equal to or higher than the overdischarge detection voltage (V_{DL}) since the charger detection function works. This action is called charger detection.

When a battery in the overdischarge condition is connected to a charger and provided that the V_M pin voltage is not lower than the charger detection voltage (V_{CHA}), the **UTC UB261** series releases the overdischarge condition when the battery voltage reaches the overdischarge detection voltage (V_{DU}) or higher.

6. Abnormal Charge Current Detection

If the V_M pin voltage falls below the charger detection voltage (V_{CHA}) during charging under normal condition and it continues for the overcharge detection delay time (t_{CU}) , the charging control FET turns off and charging stops. This action is called the abnormal charge current detection.

Abnormal charge current detection works when the DO pin voltage is “H” and the V_M pin voltage falls below the charger detection voltage (V_{CHA}). Consequently, if an abnormal charge current flows to an over-discharged battery, the **UTC UB261** series turns the charging control FET off and stops charging after the battery voltage becomes higher than the overdischarge detection voltage which make the DO pin voltage “H”, and still after the overcharge detection delay time (t_{CU}) elapses.

Abnormal charge current detection is released when the voltage difference between V_M pin and V_{SS} pin becomes less than charger detection voltage (V_{CHA}).

7. Delay Circuits

The detection delay times are determined by dividing a clock of the approximately 3.5kHz with the counter.

Note 1: The detection delay time for overcurrent 2 (t_{IOV2}) and load short-circuiting (t_{SHORT}) start when the overcurrent 1 (V_{IOV1}) is detected. When the overcurrent 2 (V_{IOV2}) or load short-circuiting (V_{SHORT}) is detected over the detection delay time for each of them (= t_{IOV2} or t_{SHORT}) after the detection of overcurrent 1 (V_{IOV1}), the **UTC UB261** series turns the FET off within t_{IOV2} or t_{SHORT} of each detection.

Note 2: When the overcurrent is detected and continues for longer than the overdischarge detection delay time (t_{DL}) without releasing the load, the condition changes to the power-down condition when the battery voltage falls below the overdischarge detection voltage (V_{DL}). When the battery voltage falls below the overdischarge detection voltage (V_{DL}) due to the overcurrent, the **UTC UB261** series turns the discharging control FET off by the overcurrent detection. In this case the recovery of the battery voltage is so slow that if the battery voltage after the overdischarge detection delay time (t_{DL}) is still lower than the over discharge detection voltage (V_{DL}), the **UTC UB261** series shifts to the power-down condition.

8. 0V Battery Charge Inhibiting Function

This function inhibits the recharging when a battery that is short-circuited (0V battery) internally is connected. When the battery voltage is the 0V battery charge inhibition battery voltage (V_{0INH}) or lower, the charging control FET gate is fixed to EB- pin voltage to inhibit charging. When the battery voltage is the 0V battery charge inhibition battery voltage (V_{0INH}) or higher, charging can be performed.

■ TIMING CHART

(1) Overcharge Detection, Overdischarge Detection

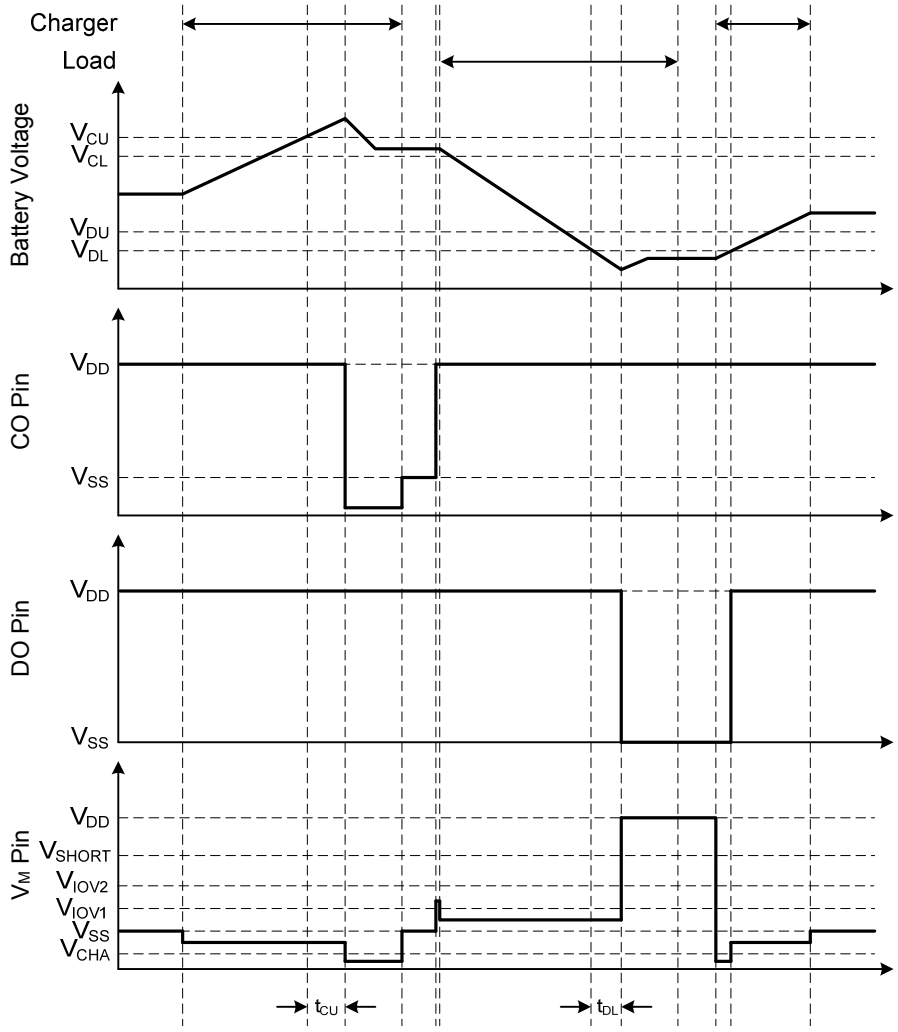

■ TIMING CHART (Cont.)

(2) Discharge Overcurrent Detection

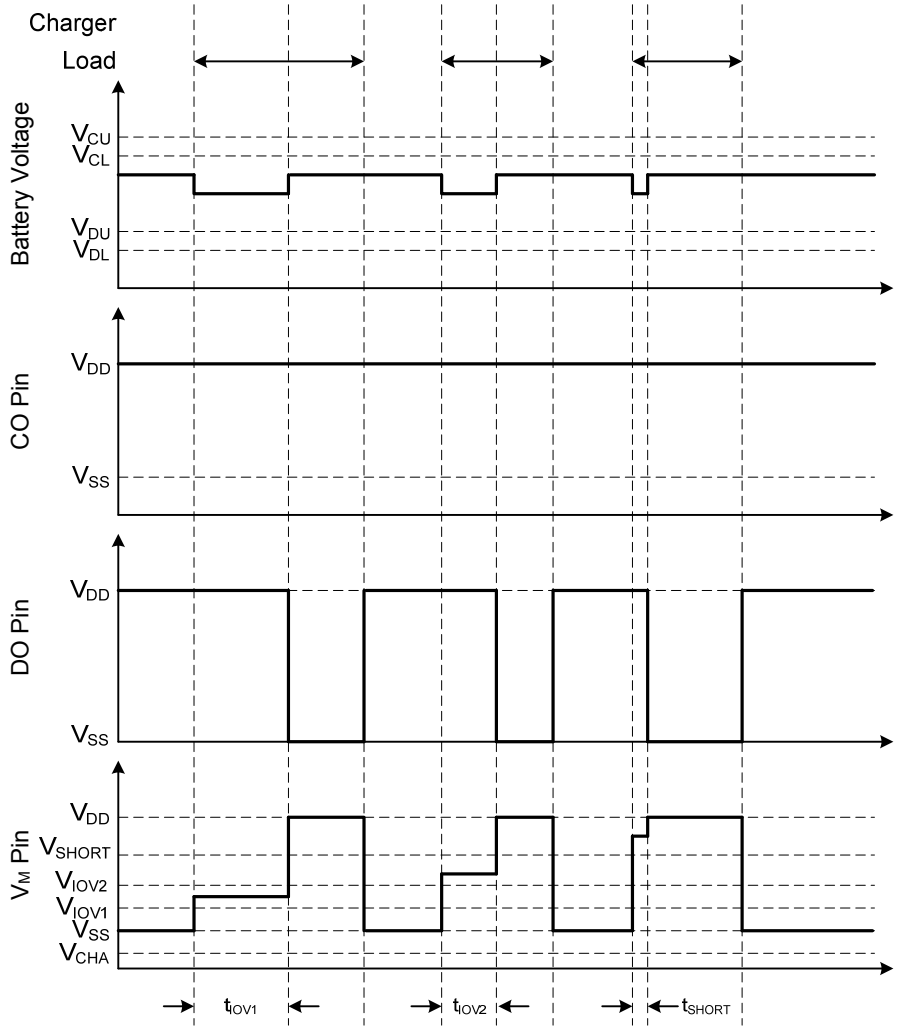

■ TIMING CHART (Cont.)

(3) Abnormal Charge Overcurrent Detection

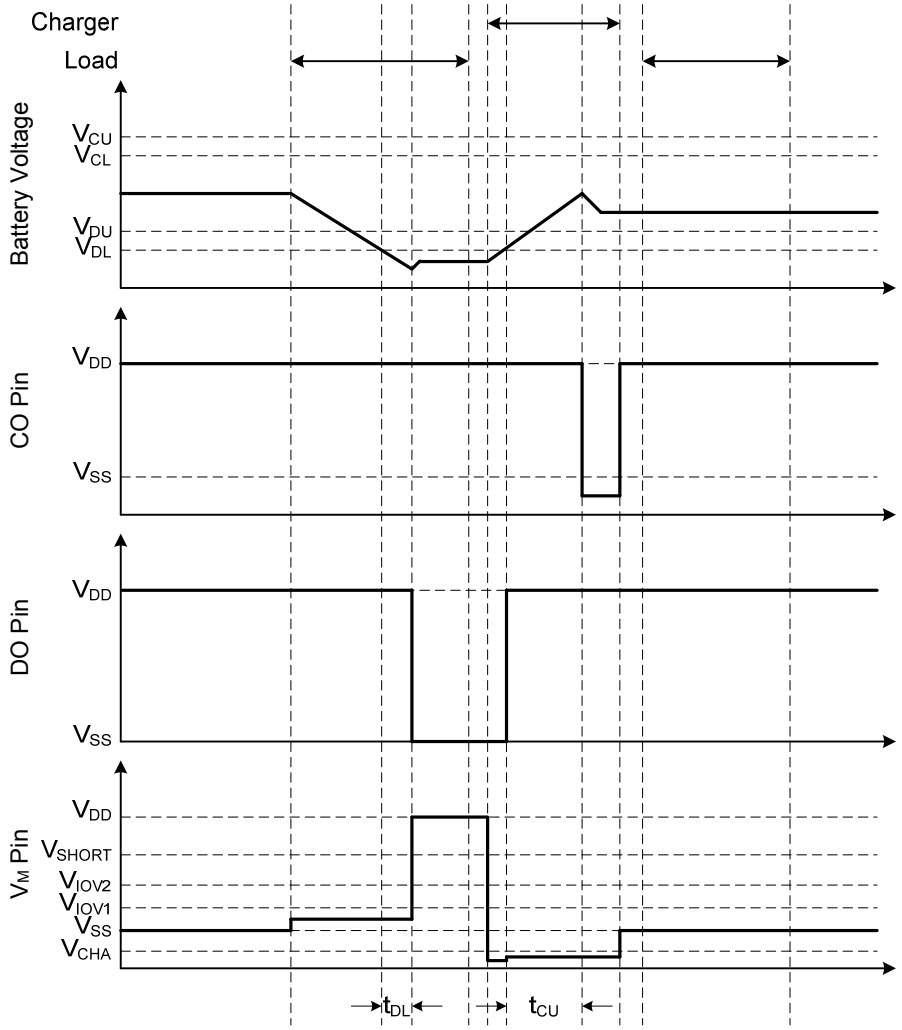

■ TYPICAL APPLICATION CIRCUIT

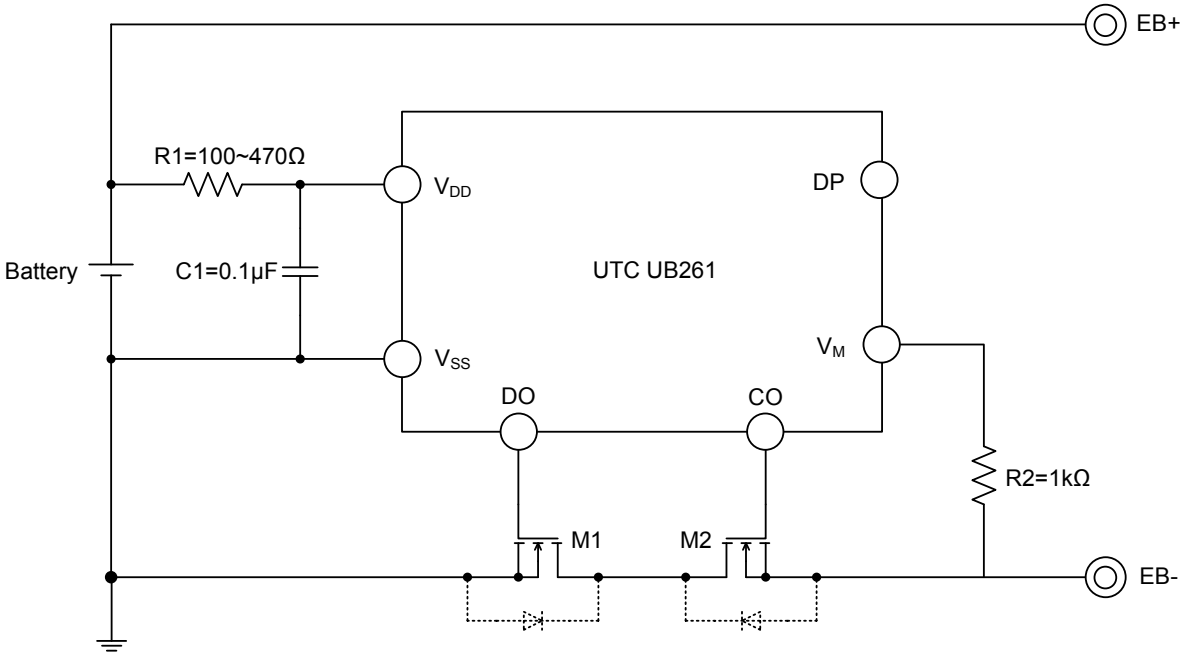

Notes: 1. Overdischarge detection voltage must be higher than the threshold voltage of M1 and M2, if not, the M1 may not cut the charging current. If the threshold voltage of M1 equal to or higher than the overdischarge detection voltage is used, discharging may be stopped before overdischarge is detected.

2. Charger voltage must be higher than the withstanding voltage between the gate and source of M1 and M2, if not, M1 and M2 may be destroyed.
3. Resistance of R1 can't be high, the value is about from 100Ω to 470Ω, If R1 has a high resistance, the voltage between V_{DD} pin and V_{SS} pin may exceed the absolute maximum rating when a charger is connected in reverse since the current flows from the charger to the IC. Insert a resistor of 100Ω or higher as R1 for ESD protection.
4. The capacitance of C1 must not be less than 0.022μF, if not, DO pin may oscillate when load short-circuiting is detected. Be sure to connect a capacitor of 0.022μF or higher to C1, the typical value is about 0.1μF.
5. The resistance of R2 can not be higher than 2kΩ, if not, the charging current may not be cut when a high-voltage charger is connected.

UTC assumes no responsibility for equipment failures that result from using products at values that exceed, even momentarily, rated values (such as maximum ratings, operating condition ranges, or other parameters) listed in products specifications of any and all UTC products described or contained herein. UTC products are not designed for use in life support appliances, devices or systems where malfunction of these products can be reasonably expected to result in personal injury. Reproduction in whole or in part is prohibited without the prior written consent of the copyright owner. The information presented in this document does not form part of any quotation or contract, is believed to be accurate and reliable and may be changed without notice.