POWER FACTOR CONTROLLER

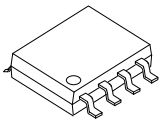

SOP-8

■ DESCRIPTION

The UTC **UA7527** is a simple and high performance active power factor corrective controller for boost PFC application which operates in the critical conduction mode. The UTC **UA7527** is optimized for electronic ballasts, low power and high density power supplies which require minimum board area reduced component count and low power dissipation. Internal R/C filter eliminates the need for an external R/C filter. Special circuitry has also been added to prevent no load runaway conditions. The output drive clamping circuit limits the overshoot of the power MOSFET gate drive despite the supply voltage. This greatly enhances the system reliability.

■ FEATURES

* Internal Start-up Timer
* Very Precise Adjustable Output Over Voltage Protection
* Zero Current Detector
* Quadrant Multiplier
* Internal R/C Filter Eliminates the Need for an External R/C Filter
* Trimmed 1.5% Internal Band Gap Reference
* Under Voltage Lockout with 3V of Hysteresis
* Totem Pole Output With High State Clamp
* Low Start-up and Operating Current

■ ORDERING INFORMATION

Ordering Number	Package	Packing
UA7527G-S08-R	SOP-8	Tape Reel

UA7527G-S08-R (1)Packing Type (2)Package Type (3)Green Package	(1) R: Tape Reel (2) S08: SOP-8 (3) G: Halogen Free and Lead Free

■ MARKING

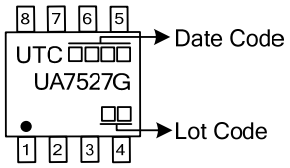

Copyright © 2015 Unisonic Technologies Co., Ltd

■ PIN CONFIGURATION

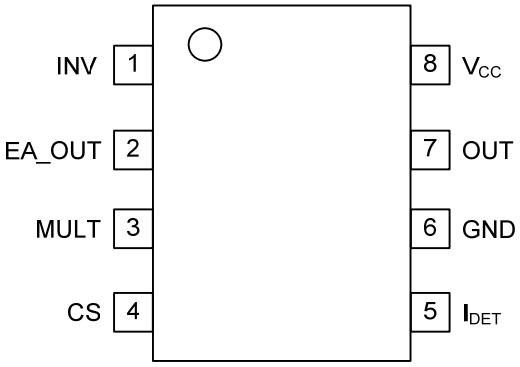

■ PIN DESCRIPTION

PIN NO.	PIN NAME	DESCRIPTION
1	INV	The inverting input of the error amplifier. The output of the boost converter should be resistively divided to 2.5V and connected to this pin.
2	EA_OUT	The error amplifier output. A feedback compensation network is placed between this pin and the INV pin.
3	MULT	Input to the multiplier stage. Full-wave rectified AC voltage is divided into a voltage less than 2V and is connected to this pin.
4	CS	Input of the Pulse-Width Modulation comparator. Current is sensed in the boost stage MOSFET by a resistor in the source lead. An internal R / C filter can filter out any high frequency noise.
5	I_{DET}	Input to zero current detection.
6	GND	The IC ground.
7	OUT	Gate driver output. This pin provides an output to an external Power MOSFET with peak current of 500mA.
8	V_{CC}	The positive supply of the device.

■ BLOCK DIAGRAM

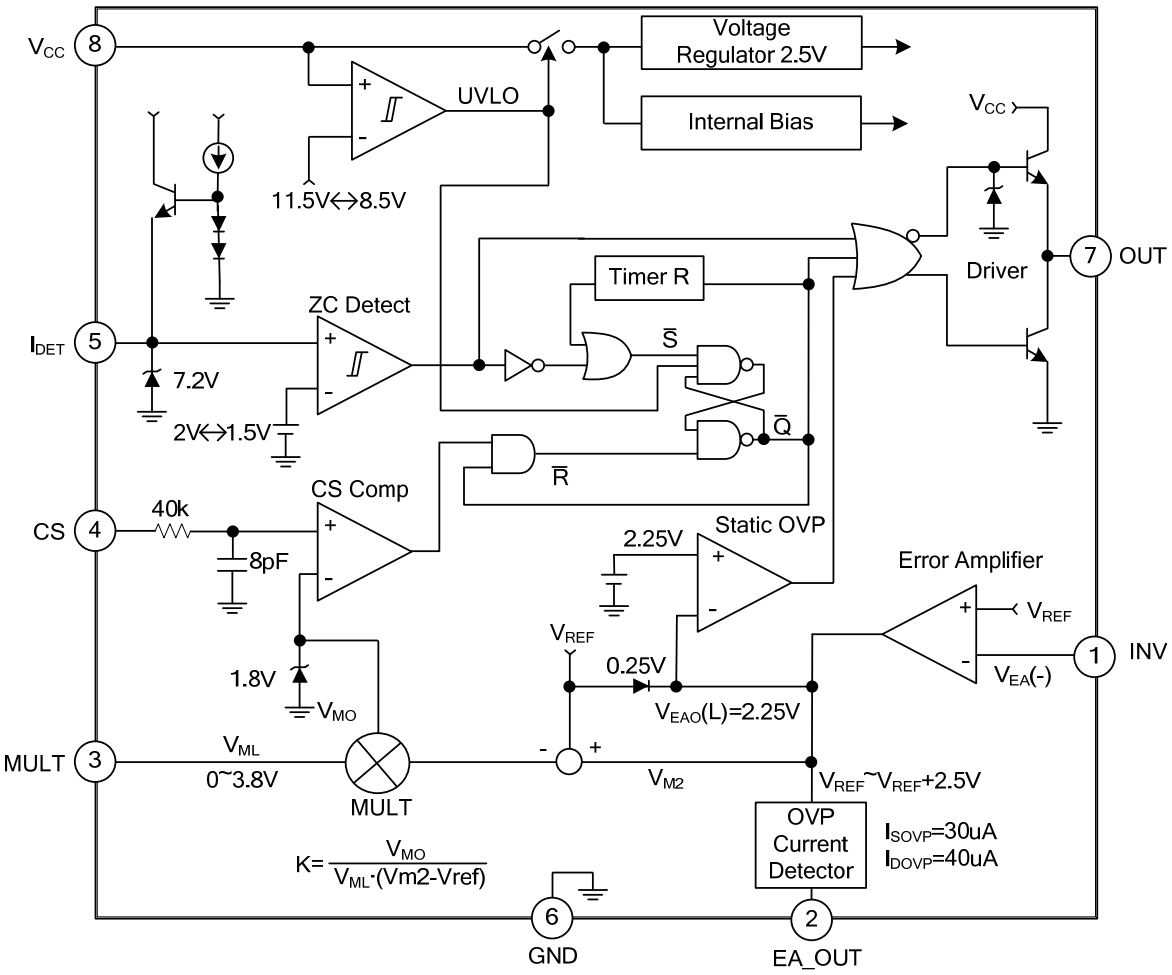

■ ABSOLUTE MAXIMUM RATING (T_A=25°C, unless otherwise specified)

PARAMETER	SYMBOL	RATINGS	UNIT
Supply Voltage	V_{CC}	30	V
Multiplier, Error Amp and Comparator Input Voltages	V_{IN}	-0.3 ~ 6	V
Peak Drive Output Current	I_{OH}, I_{OL}	±500	mA
Output Clamping Diodes Current $V_O > V_{CC}$ or $V_O < -0.3V$	I_{CLAMP}	±10	mA
Detect Clamping Diodes Current	I_{DET}	±10	mA
Power Dissipation	P_D	0.8	W
Junction Temperature	T_J	150	°C
Operating Temperature	T_{OPR}	-25 ~ 125	°C
Storage Temperature	T_{STG}	-65 ~ 150	°C

Note: Absolute maximum ratings are those values beyond which the device could be permanently damaged. Absolute maximum ratings are stress ratings only and functional device operation is not implied.

■ TEMPERATURE CHARACTERISTICS (-25°C ≤ T_A ≤ 125°C)

PARAMETER	SYMBOL	RATINGS	UNIT
Temperature Stability for Reference Voltage (V_{REF})	ΔV_{REF}	20	mV
Temperature Stability for Multiplier Gain (K)	$\Delta K/\Delta T$	-0.2	%/°C

■ ELECTRICAL CHARACTERISTICS (V_{CC}= 14V, -25°C ≤ T_A ≤ 125°C, unless otherwise specified.)

PARAMETER	SYMBOL	TEST CONDITIONS	MIN	TYP	MAX	UNIT
UNDER VOLTAGE LOCKOUT SECTION						
Start Threshold Voltage	$V_{TH(ST)}$	V_{CC} Increasing	10.5	11.5	12.5	V
UV lockout Hysteresis	$HY_{(ST)}$		2	3	4	V
SUPPLY CURRENT SECTION						
Start-up Supply Current	I_{ST}	$V_{CC} = V_{TH(ST)}$ -0.2V	10	60	100	uA
Operating Supply Current	I_{CC}	Output not switching		3	6	mA
Operating Current at OVP	$I_{CC(OVP)}$	V_{INV} = 3V		1.7	4	mA
Dynamic Operating Supply Current	I_{DCC}	50kHz, CI = 1nF		4	8	mA
ERROR AMPLIFIER SECTION						
Voltage Feedback Input Threshold	V_{REF}	I_{REF} = 0mA, T_A = 25°C	2.465	2.5	2.535	V
		-25 ≤ T_A ≤ 125°C	2.44	2.5	2.56	V
Line Regulation	ΔV_{REF1}	14V ≤ V_{CC} ≤ 25V		0.1	10	mV
Temperature Stability of V_{REF} (Note 1)	ΔV_{REF3}	-25 ≤ T_A ≤ 125°C		20		mV
Input Bias Current	$I_{B(EA)}$		-0.5		0.5	uA
Output Current	I_{SOURCE}	V_{M2} = 4V	-2	-4		mA
	I_{SINK}	V_{M2} = 4V	2	4		mA
Output Upper Clamp Voltage (Note 2)	$V_{EAO(H)}$	I_{SOURCE} = 0.1mA		6		V
Output Lower Clamp Voltage (Note 3)	$V_{EAO(L)}$	I_{SINK} = 0.1mA		2.25		V
Large Signal Open Loop gain (Note 4)	G_V		60	80		dB
Power Supply Rejection Ratio (Note 5)	PSRR	14V ≤ V_{CC} ≤ 25V	60	80		dB
Unity Gain Bandwidth (Note 6)	GBW			1		MHz
Slew Rate (Note7)	SR			0.6		V/us
MULTIPLIER SECTION						
Input Bias Current (Pin3)	$I_{B(M)}$		-0.5		0.5	uA
M1 Input Voltage Range (Pin3)	ΔV_{M1}		0		3.8	V
M2 Input Voltage Range (Pin2)	ΔV_{M2}		V_{REF}		V_{REF}+2.5	V
Multiplier Gain (Note8)	K	V_{M1} = 1V, V_{M2} = 3.5V	0.36	0.44	0.52	1/V
Maximum Multiplier Output Voltage	$V_{OMAX(M)}$	V_{INV} =0V, V_{M1} = 4V	1.65	1.8	1.95	V
Multiplier Gain Stability (Note 9)	$\Delta K/\Delta T$	-25 ≤ T_A ≤ 125°C		-0.2		%/°C

■ ELECTRICAL CHARACTERISTICS(Cont.)

PARAMETER		SYMBOL	TEST CONDITIONS	MIN	TYP	MAX	UNIT
CURRENT SENSE SECTION							
Input Offset Voltage (Note 8)		$V_{IO(CS)}$	V_{M1}=0V, V_{M2} = 2.2V	-10	3	10	mV
Input Bias Current		$I_{B(CS)}$	0V ≤ V_{CS} ≤ 1.7V	-1	-0.1	1	uA
Current Sense Delay to Output		$t_{D(CS)}$	(Note 11)		200	500	ns
ZERO CURRENT DETECT SECTION							
Input Voltage Threshold		$V_{TH(DET)}$	V_{DET} Increasing	1.7	2	2.3	V
Detect Hysteresis		$HY_{(DET)}$		0.2	0.5	0.8	V
Input Low Clamp Voltage		V_{CLAMP}	I_{DET} = -100uA	0.45	0.75	1	V
Input High Clamp Voltage		$V_{CLAMP)}$	I_{DET} = 3mA	6.5	7.2	7.9	V
Input Bias Current		$I_{B(DET)}$	1V ≤ V_{DET} ≤ 5V	-1	-0.1	1	uA
Input High/Low Clamp Diode Current		$I_{CLAMP(D)}$	(Note 12)			±3	mA
OUTPUT SECTION							
Output Voltage	High	V_{OH}	I_O = -10mA	10.5	11		V
	Low	V_{OL}	I_O = 10mA		0.8	1	V
Rising Time (Note 13)		t_R	C_l = 1nF		130	200	ns
Falling Time (Note 14)		T_F	C_l = 1nF		50	120	ns
Maximum Output Voltage		$V_{OMAX(O)}$	V_{CC} = 20V, I_O = 100uA	12	14	16	V
Output Voltage with UVLO Activated		$V_{OMIN(O)}$	V_{CC} = 5V , I_O = 100uA			1	V
RESTART TIMER SECTION							
Restart Time Delay		$t_{D(RST)}$	V_{M1} = 1V, V_{M2} = 3.5V		150		us
OVER VOLTAGE PROTECTION SECTION							
Soft OVP Detecting Current		I_{SOVP}		25	30	35	uA
Dynamic OVP Detecting Current		I_{DOVP}		35	40	45	uA
Static OVP Threshold Voltage		V_{OVP}	V_{INV} = 2.7V	2.1	2.25	2.4	V

Note: 1~14.These parameters, although guaranteed, are not 100% tested in production.

Multiplier Gain: $K=\frac{Pin4_Threshold}{V_{M1}\times(V_{M2}-V_{REF})}$ ……(V_{M1}=Vpin3, V_{M2}=Vpin2)

■ TYPICAL APPLICATION CIRCUIT

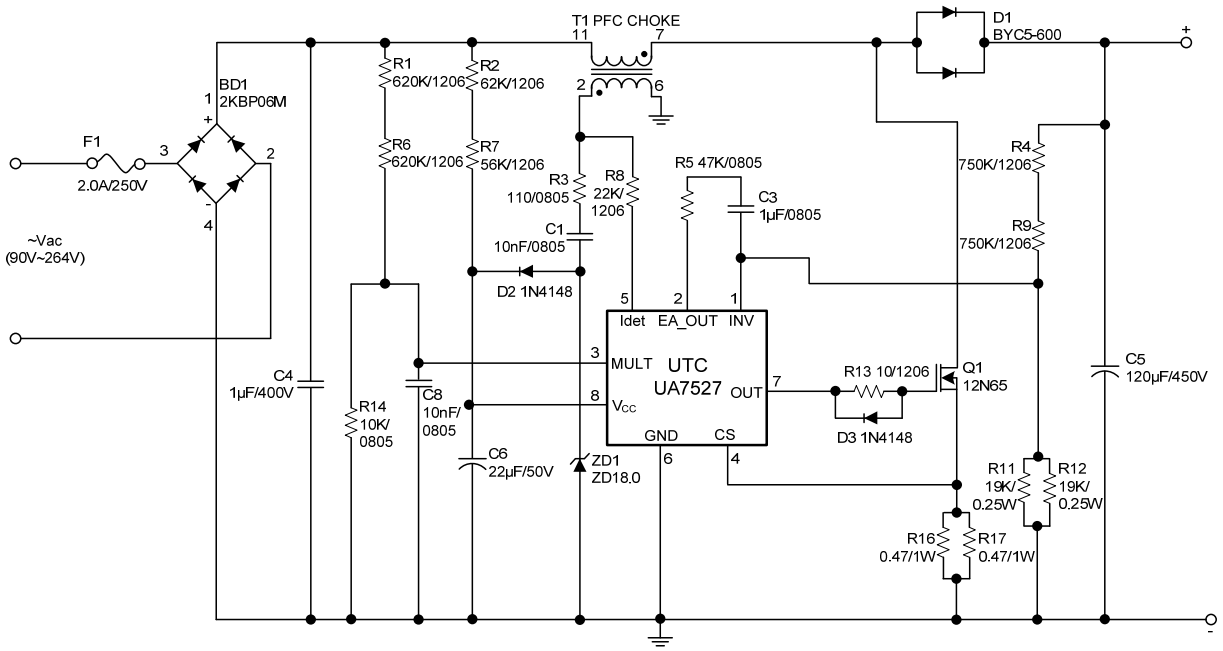

UTC assumes no responsibility for equipment failures that result from using products at values that exceed, even momentarily, rated values (such as maximum ratings, operating condition ranges, or other parameters) listed in products specifications of any and all UTC products described or contained herein. UTC products are not designed for use in life support appliances, devices or systems where malfunction of these products can be reasonably expected to result in personal injury. Reproduction in whole or in part is prohibited without the prior written consent of the copyright owner. The information presented in this document does not form part of any quotation or contract, is believed to be accurate and reliable and may be changed without notice.