U74LVC1G86

CMOS IC

SINGLE 2-INPUT EXCLUSIVE-OR GATE

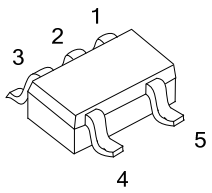

SOT-23-5
(JEDEC TO-236)

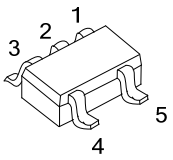

SOT-353

■ DESCRIPTION

The **U74LVC1G86** is a single 2-input EXCLUSIVE-OR gate which provides the Function $Y = A \oplus B$ or $Y = \overline{A}B + A\overline{B}$ in positive logic. Inputs can be driven from either 3.3V or 5V devices. These features allow the use of these devices in a mixed 3.3V and 5V environment.

This device is fully specified for partial Power-down applications using I_{OFF}. The I_{OFF} circuitry disables the output, preventing the damaging backflow current through the device when it is powered down.

■ FEATURES

* Operate from 1.65V to 5.5V
* Inputs accept voltages to 5.5V
* I_{OFF} supports partial-power-down mode
* Low power dissipation
* Max t_{PD} of 4 ns at 3.3V

■ ORDERING INFORMATION

Ordering Number		Package	Packing
Lead Free	Halogen Free		
U74LVC1G08L-AE5-R	U74LVC1G08G-AE5-R	SOT-23-5	Tape Reel
U74LVC1G08L-AL5-R	U74LVC1G08G-AL5-R	SOT-353	Tape Reel

U74LVC1G86L-AE5-R (1)Packing Type (2)Package Type (3)Lead Free	(1) R: Tape Reel (2) AE5: SOT-23-5,AL5: SOT-353 (3) L: Lead Free, G: Halogen Free

■ MARKING

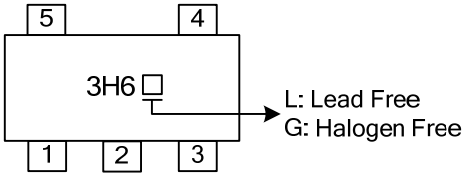

Copyright © 2014 Unisonic Technologies Co., Ltd

■ PIN CONFIGURATION

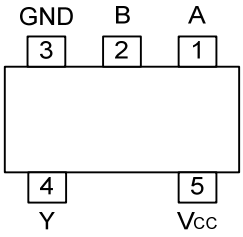

■ FUNCTION TABLE

INPUT(A)	INPUT(B)	OUTPUT(Y)
L	L	L
H	L	H
L	H	H
H	H	L

Note: H: HIGH voltage level; L: LOW voltage level;

■ LOGIC DIAGRAM (positive logic)

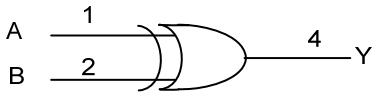

■ ABSOLUTE MAXIMUM RATING

PARAMETER		SYMBOL	RATINGS	UNIT
Supply Voltage		V_{CC}	-0.5 ~ +6.5	V
Input Voltage		V_{IN}	-0.5 ~ +6.5	V
Output Voltage	Output in the high or low state	V_{OUT}	-0.5 ~ V_{CC}+0.5	V
	Output in the high-impedance or power-off state		-0.5 ~ +6.5	V
Continuous V_{CC} or GND Current		I_{CC}	±100	mA
Continuous Output Current (V_{OUT}=0 to V_{CC})		I_{OUT}	±50	mA
Input Clamp Current (V_{IN}<0)		I_{IK}	-50	mA
Output Clamp Current (V_{OUT}<0)		I_{OK}	-50	mA
Storage Temperature Range		T_{STG}	-65 ~ +150	°C

Note: Absolute maximum ratings are those values beyond which the device could be permanently damaged. Absolute maximum ratings are stress ratings only and functional device operation is not implied.

■ RECOMMENDED OPERATING CONDITIONS

PARAMETER	SYMBOL	TEST CONDITIONS	MIN	TYP	MAX	UNIT
Supply Voltage	V_{CC}	Operating	1.65		5.5	V
		Data retention only	1.5			V
Input Voltage	V_{IN}		0		5.5	V
Output Voltage	V_{OUT}	High or low state	0		V_{CC}	V
High-level Output Current	I_{OH}	V_{CC}=1.65V			-4	mA
		V_{CC}=2.3V			-8	mA
		V_{CC}=3V			-16	mA
		V_{CC}=3V			-24	mA
		V_{CC}=4.5V			-32	mA
Low-level Output Current	I_{OL}	V_{CC}=1.65V			4	mA
		V_{CC}=2.3V			8	mA
		V_{CC}=3V			16	mA
		V_{CC}=3V			24	mA
		V_{CC}=4.5V			32	mA
Operating Temperature	T_A		-40		85	°C
Input Transition Rise or Fall Rate	Δt/Δv	V_{CC}=1.8V±0.15V, 2.5V±0.2V			20	ns/V
		V_{CC}=3.3V±0.3V			10	ns/V
		V_{CC}=5V±0.5V			5	ns/V

■ ELECTRICAL CHARACTERISTICS (T_A =25°C , unless otherwise specified)

PARAMETER	SYMBOL	TEST CONDITIONS		MIN	TYP	MAX	UNIT
High-level Input Voltage	V_{IH}	V_{CC}=1.65V to 1.95V		0.65×V_{CC}			V
		V_{CC}=2.3V to 2.7V		1.7			V
		V_{CC}=3V to 3.6V		2			V
		V_{CC}=4.5V to 5.5V		0.7×V_{CC}			V
Low-level Input Voltage	V_{IL}	V_{CC}=1.65V to 1.95V				0.35×V_{CC}	V
		V_{CC}=2.3V to 2.7V				0.7	V
		V_{CC}=3V to 3.6V				0.8	V
		V_{CC}=4.5V to 5.5V				0.3×V_{CC}	V
High-Level Output Voltage	V_{OH}	I_{OH}=-100μA	V_{CC}=1.65 to 5.5V	V_{CC}-0.1			V
		I_{OH}=-4mA	V_{CC}=1.65V	1.2			V
		I_{OH}=-8mA	V_{CC}=2.3V	1.9			V
		I_{OH}=-16mA	V_{CC}=3.0V	2.4			V
		I_{OH}=-24mA	V_{CC}=3.0V	2.3			V
		I_{OH}=-32mA	V_{CC}=4.5V	3.8			V
Low-Level Output Voltage	V_{OL}	I_{OL}=100μA	V_{CC}=1.65 to 5.5V			0.1	V
		I_{OL}=4mA	V_{CC}=1.65V			0.45	V
		I_{OL}=8mA	V_{CC}=2.3V			0.3	V
		I_{OL}=16mA	V_{CC}=3.0V			0.4	V
		I_{OL}=24mA	V_{CC}=3.0V			0.55	V
		I_{OL}=32mA	V_{CC}=4.5V			0.55	V
Input Leakage Current	$I_{I(LEAK)}$	V_{IN}=5.5V or GND, V_{CC}=0 to 5.5V				±5	μA
Power OFF Leakage Current	I_{off}	V_{IN} or V_{OUT}=5.5V, V_{CC}=0V				±10	μA
Quiescent Supply Current	I_{CC}	V_{IN}=VCC or GND, I_{OUT}=0 V_{CC}=1.65 to 5.5V				10	μA
Additional Quiescent Supply Current Per Input Pin	ΔI_{CC}	V_{CC}=3 to 5.5V, One input at V_{CC}-0.6V, Other inputs at V_{CC} or GND				500	μA
Input Capacitance	C_I	V_{CC}=3.3V, V_{IN}=V_{CC} or GND			6		pF

■ SWITCHING CHARACTERISTICS (T_A=25°C)

PARAMETER	SYMBOL	TEST CONDITIONS	MIN	TYP	MAX	UNIT
Propagation delay from input to output	t_{PLH} t_{PHL}	V_{CC}=1.8±0.15V,C_L=15pF, R_L=1MΩ	2.1		9.1	ns
		V_{CC}=2.5±0.2V,C_L=15pF, R_L=1MΩ	1		4.5	ns
		V_{CC}=3.3±0.3V,C_L=15pF, R_L=1MΩ	0.6		4	ns
		V_{CC}=5±0.5V,C_L=15pF, R_L=1MΩ	0.8		3.3	ns
Propagation delay from input to output	t_{PLH} t_{PHL}	V_{CC}=1.8±0.15V,C_L=30pF, R_L=1KΩ	3.5		9.9	ns
		V_{CC}=2.5±0.2V,C_L=30pF, R_L=500Ω	1.8		5.5	ns
		V_{CC}=3.3±0.3V,C_L=50pF, R_L=500Ω	1.3		5	ns
		V_{CC}=5±0.5V,C_L=50pF, R_L=500Ω	1		4	ns

■ OPERATING CHARACTERISTICS (T_A=25°C)

PARAMETER	SYMBOL	TEST CONDITIONS	MIN	TYP	MAX	UNIT
Power Dissipation Capacitance	C_{PD}	V_{CC}=1.8V, f=10MHz		22		pF
		V_{CC}=2.5V, f=10MHz		22		pF
		V_{CC}=3.3V, f=10MHz		22		pF
		V_{CC}=5V, f=10MHz		24		pF

■ TEST CIRCUIT AND WAVEFORMS

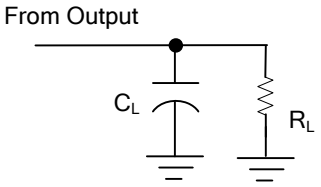

TEST CIRCUIT

V_{CC}	Inputs		V_M	C_L	R_L
	V_{IN}	t_R, t_F			
1.8V±0.15V	V_{CC}	≤2ns	$V_{CC}/2$	15pF	1MΩ
2.5V±0.2V	V_{CC}	≤2ns	$V_{CC}/2$	15pF	1MΩ
3.3V±0.3V	3V	≤2.5ns	1.5V	15pF	1MΩ
5V±0.5V	V_{CC}	≤2.5ns	$V_{CC}/2$	15pF	1MΩ

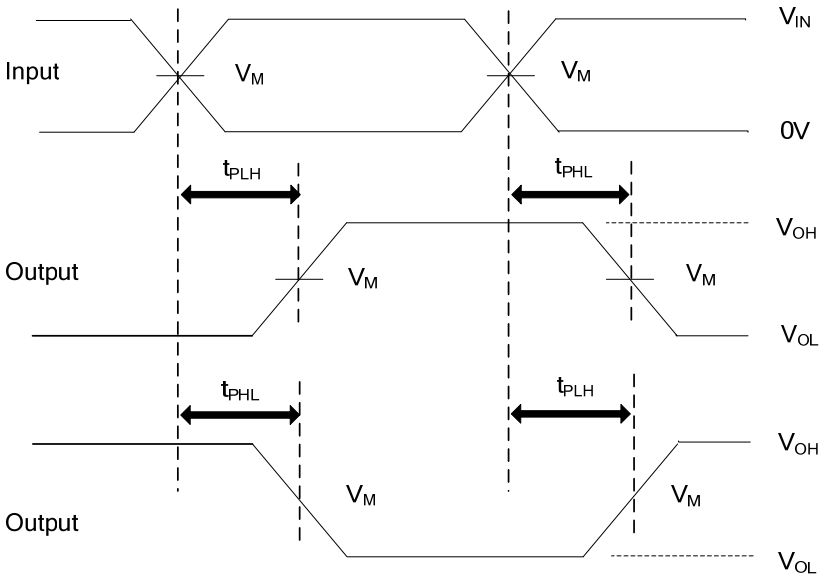

PROPAGATION DELAY TIMES

Note: 1. C_L includes probe and jig capacitance.
2. All input pulses are supplied by generators having the following characteristics: PRR ≤10MHz, Z_O = 50Ω.

■ TEST CIRCUIT AND WAVEFORMS(Cont.)

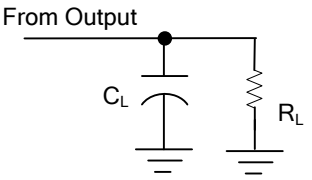

TEST CIRCUIT

V_{CC}	Inputs		V_M	C_L	R_L
	V_{IN}	t_R, t_F			
1.8V±0.15V	V_{CC}	≤2ns	$V_{CC}/2$	30pF	1KΩ
2.5V±0.2V	V_{CC}	≤2ns	$V_{CC}/2$	30pF	500Ω
3.3V±0.3V	3V	≤2.5ns	1.5V	50pF	500Ω
5V±0.5V	V_{CC}	≤2.5ns	$V_{CC}/2$	50pF	500Ω

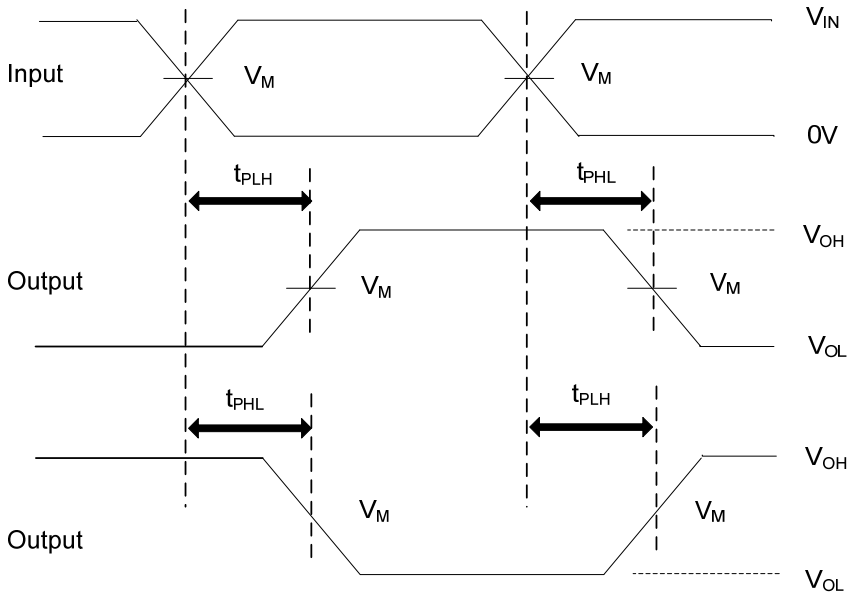

PROPAGATION DELAY TIMES

Note: 1. C_L includes probe and jig capacitance.
2. All input pulses are supplied by generators having the following characteristics: PRR ≤10MHz, Zo = 50Ω.

UTC assumes no responsibility for equipment failures that result from using products at values that exceed, even momentarily, rated values (such as maximum ratings, operating condition ranges, or other parameters) listed in products specifications of any and all UTC products described or contained herein. UTC products are not designed for use in life support appliances, devices or systems where malfunction of these products can be reasonably expected to result in personal injury. Reproduction in whole or in part is prohibited without the prior written consent of the copyright owner. The information presented in this document does not form part of any quotation or contract, is believed to be accurate and reliable and may be changed without notice.