U74HCT3G04

CMOS IC

INVERTER

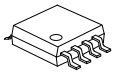

MSOP-8



TSSOP-8

■ DESCRIPTION

The **U74HCT3G04** provides three inverters, it is compatible with TTL.

■ FEATURES

* Low power dissipation
* High speed
* High noise immunity

■ ORDERING INFORMATION

Ordering Number	Package	Packing
U74HCT3G04G-SM1-R	MSOP-8	Tape Reel
U74HCT3G04G-P08-R	TSSOP-8	Tape Reel

U74HCT3G04G-SM1-R
(1)Packing Type
(2)Package Type
(3)Green Package

(1) R: Tape Reel
(2) SM1: MSOP-8, P08: TSSOP-8
(3) G: Halogen Free and Lead Free

■ MARKING

MSOP-8	TSSOP-8
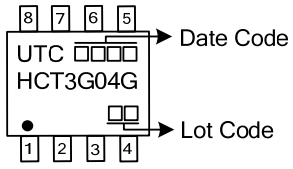	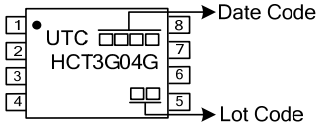

Copyright © 2015 Unisonic Technologies Co., Ltd

■ PIN CONFIGURATION

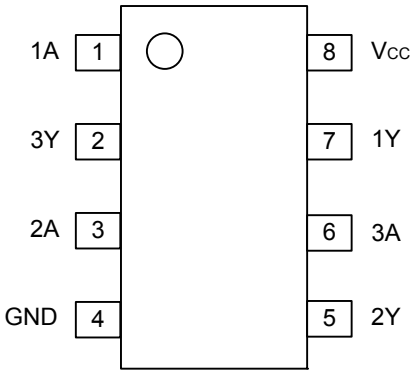

■ FUNCTION TABLE (each gate)

INPUT	OUTPUT
A	Y
L	H
H	L

■ LOGIC DIAGRAM (positive logic)

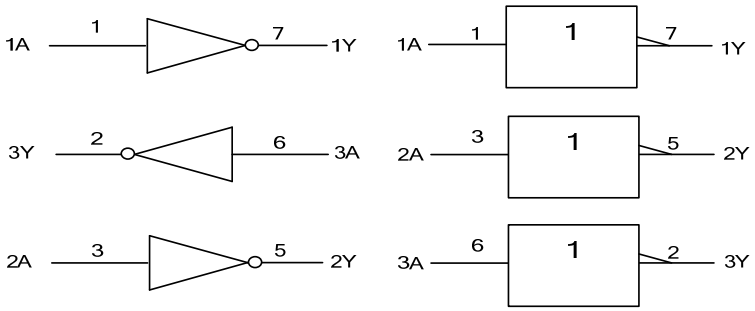

■ ABSOLUTE MAXIMUM RATINGS (unless otherwise specified)

PARAMETER	SYMBOL	RATINGS	UNIT
Supply Voltage	V_{CC}	-0.5~ 7	V
Input Voltage	V_{IN}	-0.5~ 7	V
Output Voltage	V_{OUT}	-0.5 ~ V_{CC}+0.5	V
Output Current	I_{OUT}	25	mA
V_{CC} or GND Current	I_{CC}	50	mA
Input Clamp Current	I_{IK}	±20	mA
Output Clamp Current	I_{OK}	±20	mA
Power Dissipation	P_D	300	mW
Storage Temperature	T_{STG}	-65 ~ +150	°C

Note: Absolute maximum ratings are those values beyond which the device could be permanently damaged. Absolute maximum ratings are stress ratings only and functional device operation is not implied.

■ RECOMMENDED OPERATING CONDITIONS

PARAMETER	SYMBOL	CONDITIONS	MIN	TYP	MAX	UNIT
Supply Voltage	V_{CC}		4.5	5.0	5.5	V
Input Voltage	V_{IN}		0		V_{CC}	V
Output Voltage	V_{OUT}		0		V_{CC}	V
Input Transition Rise or Fall Rate	t_R, t_F	V_{CC}=4.5V		6.0	500	ns
Operating Temperature	T_A		-40		+125	°C

■ STATIC CHARACTERISTICS (T_A=25°C, unless otherwise specified)

PARAMETER	SYMBOL	TEST CONDITIONS	MIN	TYP	MAX	UNIT
High-Level Input Voltage	V_{IH}	V_{CC}=4.5V~5.5V	2.0	1.6		V
Low-Level Input Voltage	V_{IL}	V_{CC}=4.5V~5.5V		1.2	0.8	V
High-Level Output Voltage	V_{OH}	V_{CC}=4.5V, I_{OH}=-20μA	4.4	4.5		V
		V_{CC}=4.5V, I_{OH}=-4.0mA	4.18	4.32		
Low-Level Output Voltage	V_{OL}	V_{CC}=4.5V, I_{OL}=20μA		0	0.1	V
		V_{CC}=4.5V, I_{OL} =4.0mA		0.15	0.26	
Input Leakage Current	$I_{I(LEAK)}$	V_{CC}=5.5V, V_{IN}=V_{CC} or GND			±1.0	μA
Quiescent Supply Current	I_Q	V_{CC}=5.5V, I_{OUT}=0, V_{IN}=V_{CC} or GND			10	μA
Additional Quiescent Supply Current	ΔI_Q	V_{CC}=5.5V, I_{OUT}=0, V_{IN}=V_{CC} -2.1V			300	μA
Input Capacitance	C_{IN}			1.5		pF

■ DYNAMIC CHARACTERISTICS (t_R, t_F≤6.0ns)

PARAMETER	SYMBOL	TEST CONDITIONS	MIN	TYP	MAX	UNIT
Propagation Delay From nA to nY	t_{PHL} /t_{PLH}	V_{CC}=4.5V, C_L=50pF		10	23	ns
Output Transition Time	t_{THL} /t_{TLH}	V_{CC}=4.5V, C_L=50pF		6	19	ns

■ OPERATING CHARACTERISTIC

PARAMETER	SYMBOL	TEST CONDITIONS	MIN	TYP	MAX	UNIT
Power Dissipation Capacitance	Cpd			9		pF

■ TEST CIRCUIT AND WAVEFORMS

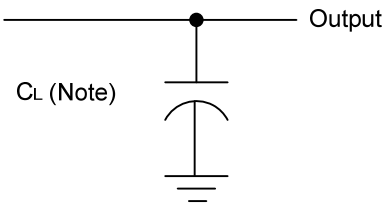

Note: C_L includes probe and jig capacitance.

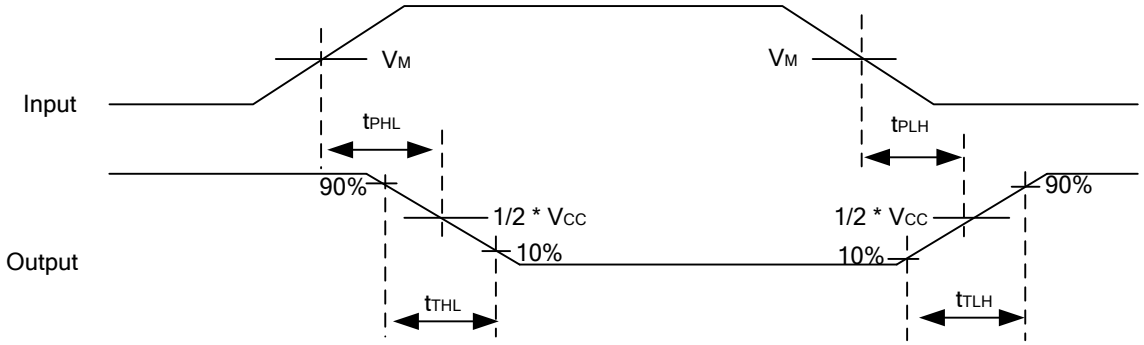

V_M=1.3V,Input=GND to3.0V

UTC assumes no responsibility for equipment failures that result from using products at values that exceed, even momentarily, rated values (such as maximum ratings, operating condition ranges, or other parameters) listed in products specifications of any and all UTC products described or contained herein. UTC products are not designed for use in life support appliances, devices or systems where malfunction of these products can be reasonably expected to result in personal injury. Reproduction in whole or in part is prohibited without the prior written consent of the copyright owner. The information presented in this document does not form part of any quotation or contract, is believed to be accurate and reliable and may be changed without notice.