U74AHCT1G125

CMOS IC

SINGLE BUS BUFFER GATE WITH 3-STATE OUTPUT

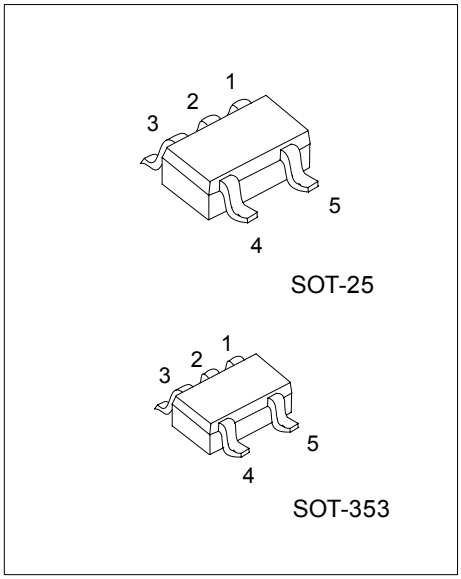

*Pb-free plating product number:
U74AHCT1G125L

■ DESCRIPTION

The U74AHCT1G125 is a single bus buffer gate with 3-state output controlled by enable input ($\overline{OE}$), When $\overline{OE}$ is HIGH, the output is disabled.

■ FEATURES

* Operation Voltage Range: 4.5~5.5V
* Low Power Dissipation: 10uA(Max)
* Inputs are TTL-Voltage Compatible

■ ORDERING INFORMATION

Order Number		Package	Packing
Normal	Lead Free Plating		
U74AHCT1G125-AF5-R	U74AHCT1G125L-AF5-R	SOT-25	Tape Reel
U74AHCT1G125-AL5-R	U74AHCT1G125L-AL5-R	SOT-353	Tape Reel

U74AHCT1G125L-AF5-R (1)Packing Type (2)Package Type (3)Lead Plating	(1) R: Tape Reel (2) AF5: SOT-25, AL5: SOT-353 (3) L: Lead Free Plating, Blank: Pb/Sn

■ MARKING

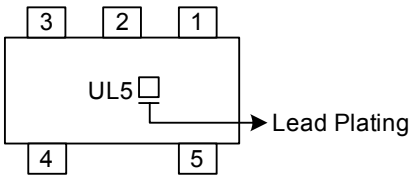

Copyright © 2005 Unisonic Technologies Co., Ltd

■ PIN CONFIGURATION

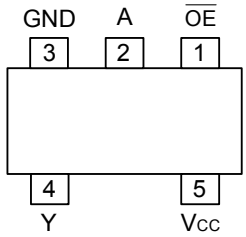

■ FUNCTION TABLE (each gate)

INPUT		OUTPUT
$\overline{OE}$	A	Y
L	L	L
L	H	H
H	X	Z

■ LOGIC DIAGRAM (positive logic)

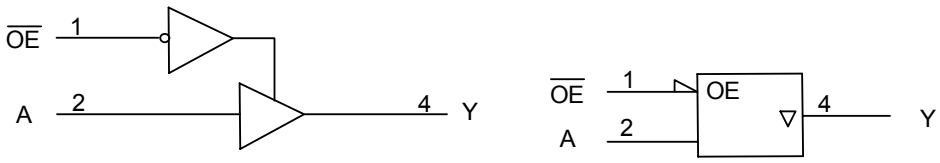

■ ABSOLUTE MAXIMUM RATINGS (unless otherwise specified)(Note 1)

PARAMETER	SYMBOL	RATINGS	UNIT
Supply Voltage	V_{CC}	-0.5~7	V
Input Voltage	V_{IN}	-0.5~7	V
Output Voltage	V_{OUT}	-0.5~V_{CC}+0.5	V
Input Clamp Current	I_{IK}	-20	mA
Output Clamp Current	I_{OK}	±20	mA
Output Current	I_{OUT}	±25	mA
V_{CC} or GND Current	I_{CC}	±50	mA
Storage Temperature	T_{STG}	-65 ~ +150	℃

Note 1. The input and output voltage ratings may be exceeded if the input and output current ratings are observed.
2. Absolute maximum ratings are those values beyond which the device could be permanently damaged. Absolute maximum ratings are stress ratings only and functional device operation is not implied.

■ RECOMMENDED OPERATING COMDITIONS

PARAMETER	SYMBOL	CONDITIONS	MIN	TYP	MAX	UNIT
Supply Voltage	V_{CC}		4.5		5.5	V
Input Voltage	V_{IN}		0		5.5	V
Output Voltage	V_{OUT}		0		V_{CC}	V
Input Transition Rise or Fall Rate	$\Delta t/\Delta v$	V_{CC}=5.0+0.5V			20	ns/V
Operating Temperature	T_A		-40		85	℃

■ STATIC CHARACTERISTICS (T_A=25℃)

PARAMETER		SYMBOL	TEST CONDITIONS	MIN	TYP	MAX	UNIT
Input Voltage	High-Level	V_{IH}	V_{CC}=4.5V~5.5V	2			V
	Low-Level	V_{IL}	V_{CC}=4.5V~5.5V			0.8	V
Output Voltage	High-Level	V_{OH}	V_{CC}=4.5V, I_{OH}=-50μA	4.4	4.5		V
			V_{CC}=4.5V, I_{OH}=-8mA	3.94			
	Low-Level	V_{OL}	V_{CC}=4.5V, I_{OL}=50μA			0.1	V
			V_{CC}=4.5V, I_{OH}=8mA			0.36	
Input Leakage Current		$I_{I(LEAK)}$	V_{CC}=0V~5.5V, V_{IN}=V_{CC} or GND			±0.1	μA
Output Current, OFF-state		I_{OZ}	V_{CC}=5.5V, V_{OUT}=V_{CC} or GND			±0.25	μA
Quiescent Supply Current		I_Q	V_{CC}=5.5V, V_{IN}=V_{CC} or GND, I_{OUT}=0			1	μA
Additional Quiescent Supply Current		ΔI_{CC}	V_{CC}=5.5V, One input at 3.4V, Other input at V_{CC} or GND			1.35	mA
Input Capacitance		C_{IN}	V_{CC}=5V, V_{IN}=V_{CC} or GND		4	10	pF
Output Capacitance		C_{OUT}	V_{CC}=5V, V_{OUT}=V_{CC} or GND		10		pF

■ DYNAMIC CHARACTERISTICS (T_A=25℃, Input: t_R, t_F≤3ns; PRR≤1MHz)

PARAMETER	SYMBOL	TEST CONDITIONS	MIN	TYP	MAX	UNIT
Propagation Delay From A to Y	t_{PLH}	V_{CC} =5V±0.5V, C_L=15pF		3.8	5.5	ns
	t_{PHL}			3.8	5.5	
Turn-On Time $\overline{OE}$ to Y	t_{PZH}	V_{CC} =5V±0.5V, C_L=15pF		3.6	5.1	ns
	t_{PZL}			3.6	5.1	
Turn-Off Time $\overline{OE}$ to Y	t_{PHZ}	V_{CC} =5V±0.5V, C_L=15pF		4.6	6.8	ns
	t_{PLZ}			4.6	6.8	
Propagation Delay From A to Y	t_{PLH}	V_{CC} =5V±0.5V, C_L=50pF		5.3	7.5	ns
	t_{PHL}			5.3	7.5	
Turn-On Time $\overline{OE}$ to Y	t_{PZH}	V_{CC} =5V±0.5V, C_L=50pF		5.1	7.1	ns
	t_{PZL}			5.1	7.1	
Turn-Off Time $\overline{OE}$ to Y	t_{PHZ}	V_{CC} =5V±0.5V, C_L=50pF		6.1	8.8	ns
	t_{PLZ}			6.1	8.8	
OPERATING CHARACTERISTICS						
Power Dissipation Capacitance	Cpd	No load, f=1MHz, V_{CC}=5			14	pF

■ TEST CIRCUIT AND WAVEFORMS

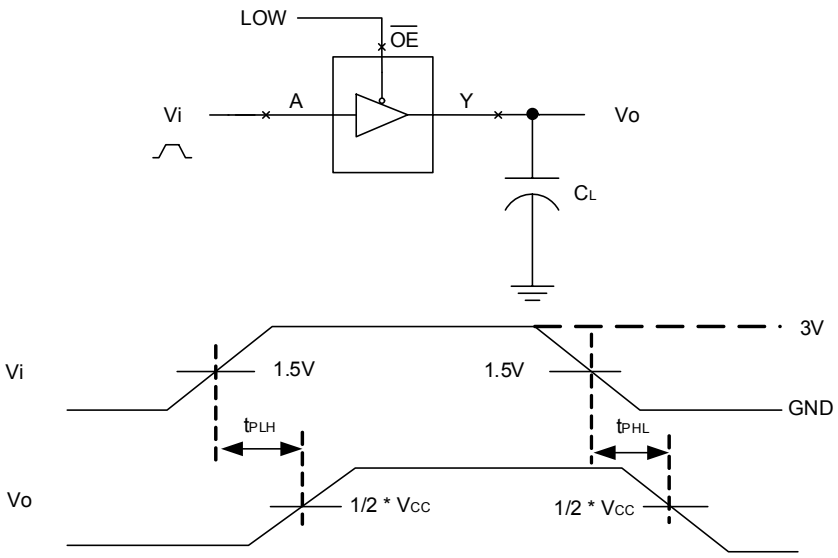

Note: C_L includes probe and jig capacitance.

Fig-1 Propagation delay from A to Y

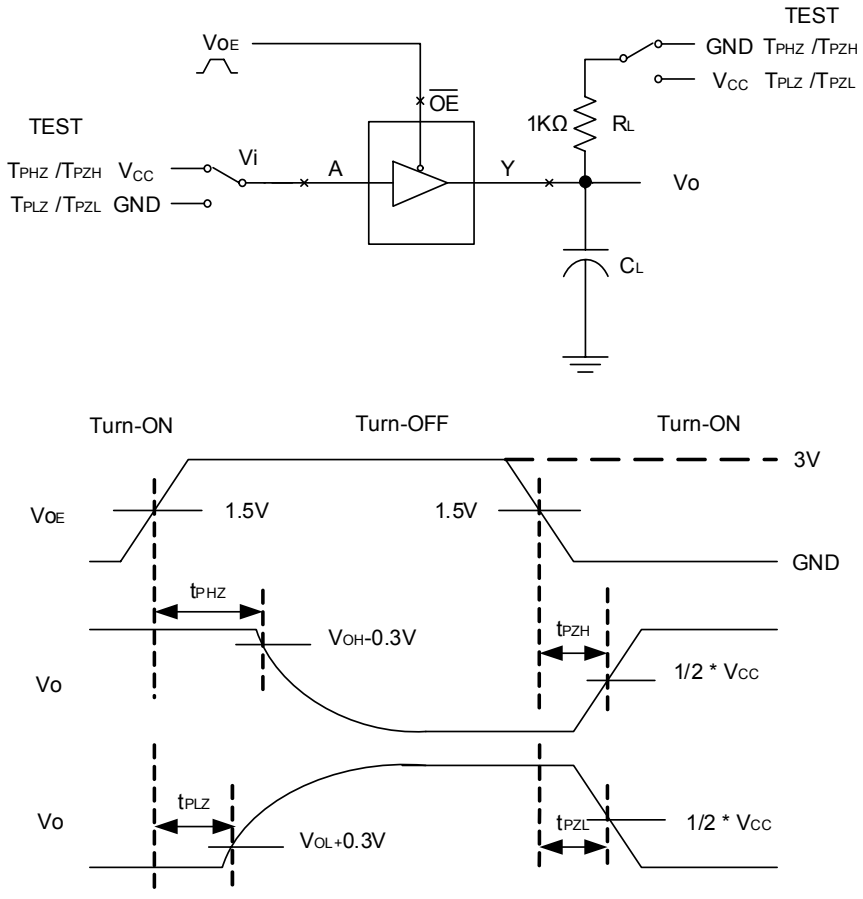

Fig-2 The turn-on and turn-off times.

UTC assumes no responsibility for equipment failures that result from using products at values that exceed, even momentarily, rated values (such as maximum ratings, operating condition ranges, or other parameters) listed in products specifications of any and all UTC products described or contained herein. UTC products are not designed for use in life support appliances, devices or systems where malfunction of these products can be reasonably expected to result in personal injury. Reproduction in whole or in part is prohibited without the prior written consent of the copyright owner. The information presented in this document does not form part of any quotation or contract, is believed to be accurate and reliable and may be changed without notice.