U74AHC1G66

CMOS IC

BILATERAL SWITCH

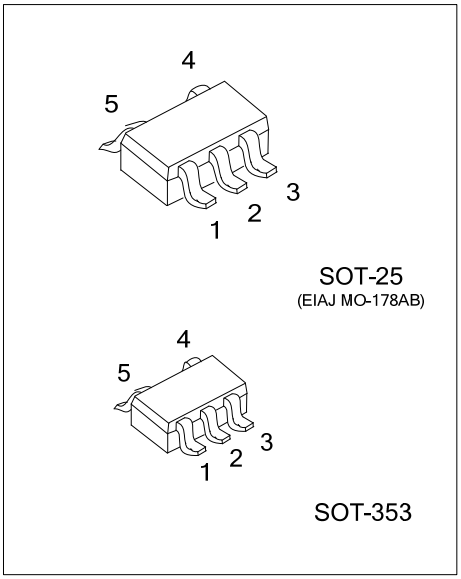

■ DESCRIPTION

The UTC **U74AHC1G66** is an analog switch which transmits signals from pin(Y or Z) to pin (Z or Y) with an active HIGH enable input pin (E). When pin E is LOW, the switch is turned off.

■ FEATURES

* Operation voltage range: 2~5.5V
* Low power dissipation
* Very low ON-resistance: 26Ω (typ.) at V_{CC}=3.0V
  16Ω (typ.) at V_{CC}=4.5V
  14Ω (typ.) at V_{CC}=5.5V

■ ORDERING INFORMATION

Ordering Number	Package	Packing
U74LVC1G34G-AF5-R	SOT-25	Tape Reel
U74LVC1G34G-AL5-R	SOT-353	Tape Reel

U74LVC1G34G-AF5-R

(1)Packing Type	(1) R: Tape Reel
(2)Package Type	(2) AF5: SOT-25, AL5: SOT-353
(3)Green Package	(3) G: Halogen Free and Lead Free

■ MARKING

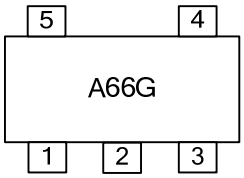

Copyright © 2015 Unisonic Technologies Co., Ltd

■ PIN CONFIGURATION

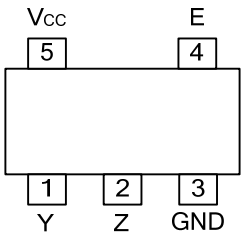

■ PIN DESCRIPTION

PIN NO.	SYMBOL	DESCRIPTION
1	Y	independent input/output
2	Z	independent output/input
3	GND	ground
4	E	enable input
5	V_{CC}	supply voltage

■ FUNCTION TABLE (each gate)

INPUT E	SWITCH
H	ON
L	OFF

■ LOGIC DIAGRAM (positive logic)

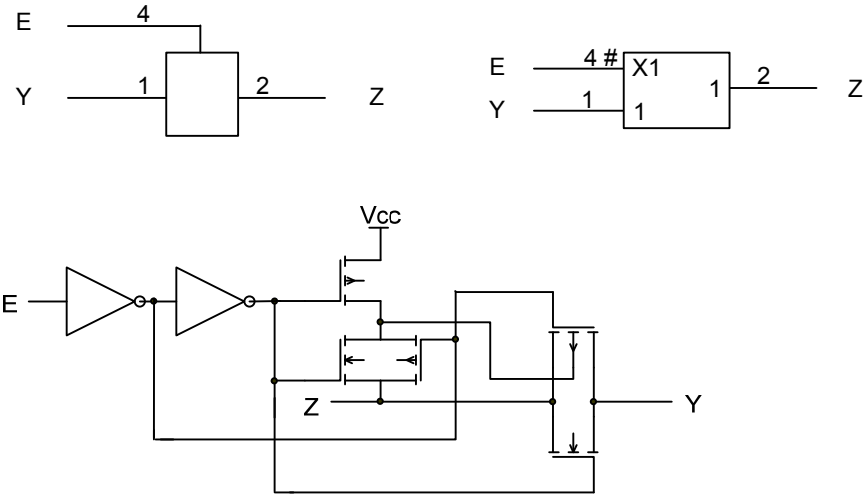

■ ABSOLUTE MAXIMUM RATINGS (unless otherwise specified)(Note 2)

PARAMETER	SYMBOL	RATINGS	UNIT
Supply Voltage	V_{CC}	-0.5~7	V
Enable Input Voltage	V_E	-0.5~7	V
Enable Input Clamp Current	I_{EK}	-20	mA
Switch Diode Current	I_{SK}	±20	mA
On-State Switch Current(-0.5V<V_{OS}<V_{CC}+0.5V)	I_S	±25	mA
V_{CC} or GND Current	I_{CC}	±75	mA
Power Dissipation	P_D	250	mW
Storage Temperature	T_{STG}	-65 ~ +150	°C

Notes: 1. Absolute maximum ratings are those values beyond which the device could be permanently damaged. Absolute maximum ratings are stress ratings only and functional device operation is not implied.
2. The input and output voltage ratings may be exceeded if the input and output current ratings are observed.
3. To avoid drawing V_{CC} current out of pin Z, when switch current flows into pin Y, the voltage drop across the bidirectional switch must not exceed 0.4V. If the switch current flows into pin Z, no V_{CC} current will flow out of pin Y. In this case there is no limit for the voltage drop across the switch, but the voltage at pins Y and Z may not exceed V_{CC} or GND.

■ RECOMMENDED OPERATING CONDITIONS

PARAMETER	SYMBOL	CONDITIONS	MIN	TYP	MAX	UNIT
Supply Voltage	V_{CC}		2	5.0	5.5	V
Enable Input Voltage	V_E		0		5.5	V
Switch Voltage	V_S		0		V_{CC}	V
Input Transition Rise or Fall Rate	$\frac{\Delta t}{\Delta V}$	V_{CC}=3.3+0.3V			100	ns/V
		V_{CC}=5.0+0.5V			20	ns/V
Operating Temperature	T_A		-40	25	125	°C

■ STATIC CHARACTERISTICS

PARAMETER		SYMBOL	TEST CONDITIONS	MIN	TYP	MAX	UNIT
Input Voltage	High-Level	V_{IH}	V_{CC}=2.0V	1.5			V
			V_{CC}=3.0V	2.1			V
			V_{CC}=5.5V	3.85			V
	Low-Level	V_{IL}	V_{CC}=2.0V			0.5	V
			V_{CC}=3.0V			0.9	V
			V_{CC}=5.5V			1.65	V
Enable Input Leakage Current		$I_{E(LEAK)}$	V_{CC}=5.5V, V_E =V_{CC} or GND			0.1	μA
State Switch Current	OFF	I_S	V_{CC}=5.5V, |V_s |=V_{CC} -GND			0.1	μA
	ON		V_{CC}=5.5V			0.1	μA
ON-Resistance (Peak) (Note)		$R_{ON(PEAK)}$	V_{CC}=2.0V, V_{IS}= V_{CC} to GND, I_S=1mA		148		Ω
			V_{CC}=3.0V~3.6V, $V_{I s}$= V_{CC} to GND, I_S=10mA		28	50	Ω
			V_{CC}=4.5V~5.5V, $V_{I s}$= V_{CC} to GND, I_S=10mA		15	30	Ω
ON-Resistance (Rail)		$R_{ON(RAIL)}$	V_{CC}=2.0V, V_{IS} = V_{CC}, I_S=1mA		28		Ω
			V_{CC}=2.0V, V_{IS} = GND, I_S=1mA		30		Ω
			V_{CC}=3.0V~3.6V, V_{IS} = V_{CC}, I_S=10mA		18	50	Ω
			V_{CC}=3.0V~3.6V, V_{IS} = GND, I_S=10mA		20	50	Ω
			V_{CC}=4.5V~5.5V, V_{IS}= V_{CC}, I_S=10mA		13	22	Ω
			V_{CC}=4.5V~5.5V, V_{IS}= GND, I_S=10mA		15	22	Ω
Quiescent Supply Current		I_Q	V_{CC}=5.5V,V_E =V_{CC} or GND,V_{IS}= GND or V_{CC}, V_{OS}=V_{CC} or GND			1.0	μA
Enable Input Capacitance		C_E	V_E=V_{CC} or GND		2	10	pF
Maximum Switch Capacitance		C_S	Independent I/O		4	10	pF

Note: With supply voltages at or near 2V, the analog switch on-state resistance becomes very nonlinear. Only digital signals should be transmitted at these low supply voltages.

■ DYNAMIC CHARACTERISTICS (Ta=25°C)

Input: t_R, t_F≤3ns; PRR≤1MHz, All typical values are measured at V_{CC}=2V; V_{CC}=3.3V or V_{CC}=5V.

PARAMETER	SYMBOL	TEST CONDITIONS	MIN	TYP	MAX	UNIT
Propagation Delay From Y/Z TO Z/Y	t_{PHL} /t_{PLH}	V_{CC} =2.0V, C_L =50pF		2.2	5	ns
Turn-On Time From E TO Z/Y	t_{PZH} /t_{PZL}	V_{CC} =2.0V, C_L =15pF		7	25	ns
		V_{CC} =2.0V, C_L =50pF		11	35	ns
Turn-Off Time From E TO Z/Y	t_{PHZ} /t_{PLZ}	V_{CC} =2.0V, C_L =15pF		9	25	ns
		V_{CC} =2.0V, C_L =50pF		13	35	ns
Propagation Delay From Y/Z TO Z/Y	t_{PHL} /t_{PLH}	V_{CC} =3.0V~3.6V, C_L =50pF		1	2	ns
Turn-On Time From E TO Z/Y	t_{PZH} /t_{PZL}	V_{CC} =3.0V~3.6V, C_L =15pF		4	11	ns
		V_{CC} =3.0V~3.6V, C_L =50pF		5.8	15	ns
Turn-Off Time From E TO Z/Y	t_{PHZ} /t_{PLZ}	V_{CC} =3.0V~3.6V, C_L =15pF		6	11	ns
		V_{CC} =3.0V~3.6V, C_L =50pF		8.4	15	ns
Propagation Delay From Y/Z TO Z/Y	t_{PHL} /t_{PLH}	V_{CC} =4.5V~5.5V, C_L =50pF		0.6	1	ns
Turn-On From E TO Z/Y	t_{PZH} /t_{PZL}	V_{CC} =4.5V~5.5V, C_L =15pF		3	8	ns
		V_{CC} =4.5V~5.5V, C_L =50pF		4.4	11	ns
Turn-Off Time From E TO Z/Y	t_{PHZ} /t_{PLZ}	V_{CC} =4.5V~5.5V, C_L =15pF		5	8	ns
		V_{CC} =4.5V~5.5V, C_L =50pF		6.1	11	ns

Recommended conditions and typical values. GND=0; t_R=t_F=3ns

PARAMETER	SYMBOL	TEST CONDITIONS	MIN	TYP	MAX	UNIT
Sine-Wave Distortion at f=1kHz		V_{CC}=3.0V~3.6V, $V_{IS(P-P)}$=2.5V, R_L=10kΩ, C_L=50pF		0.025		%
		V_{CC}=4.5V~5.5V, $V_{IS(P-P)}$=4.0V, R_L=10kΩ, C_L=50pF		0.015		%
Sine-Wave Distortion at f=10kHz		V_{CC}=3.0V~3.6V, $V_{IS(P-P)}$=2.5V, R_L=10kΩ, C_L=50pF		0.025		%
		V_{CC}=4.5V~5.5V, $V_{IS(P-P)}$=4.0V, R_L=10kΩ, C_L=50pF		0.015		%
Switch OFF Signal Feed-Through (Note 1)		V_{CC}=3.0V~3.6V, R_L=600Ω, C_L=50pF, F=1MHz		-50		dB
		V_{CC}=4.5V~5.5V, R_L=600Ω, C_L=50pF, F=1MHz		-50		dB
Minimum Frequency Response (-3dB) (Note 2)	f_{MAX}	V_{CC}=3.0V~3.6V, R_L=50Ω, C_L=10pF		230		MHz
		V_{CC}=4.5V~5.5V, R_L=50Ω, C_L=10pF		280		MHz
OPERATING CHARACTERISTICS						
Power Dissipation Capacitance	Cpd	C_L=50pF, f=10MHz, V_{CC}=5		13		pF

Notes: 1. Adjust input voltage V_{IS} is 0dbm level (0dbm=1mW into 600Ω)
2. Adjust input voltage V_{IS} is 0dbm level at V_{OS} for 1MHz (0dbm=1mW into 50Ω)

■ TEST CIRCUIT AND WAVEFORMS

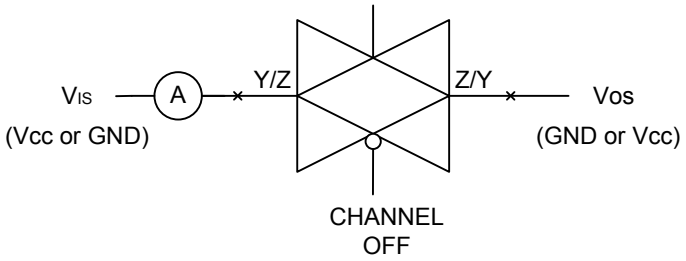

Fig-1 OFF-State Switch Leakage Current Test Circuit

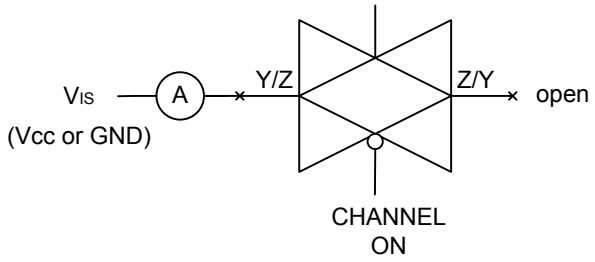

Fig-2 ON-State Leakage Current Test Circuit

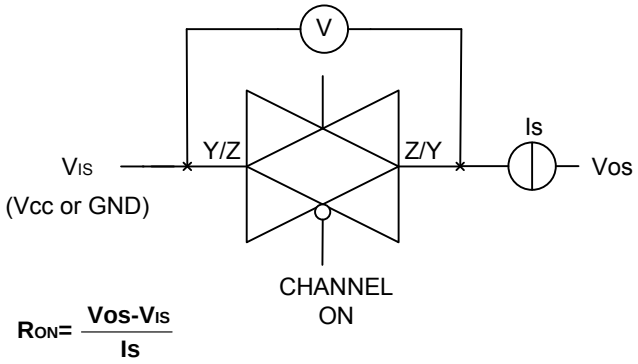

$$R_{ON}=\frac{Vos-V_{IS}}{Is}$$

Fig-3 ON-State Resistance Test Circuit

■ TEST CIRCUIT AND WAVEFORMS(Cont.)

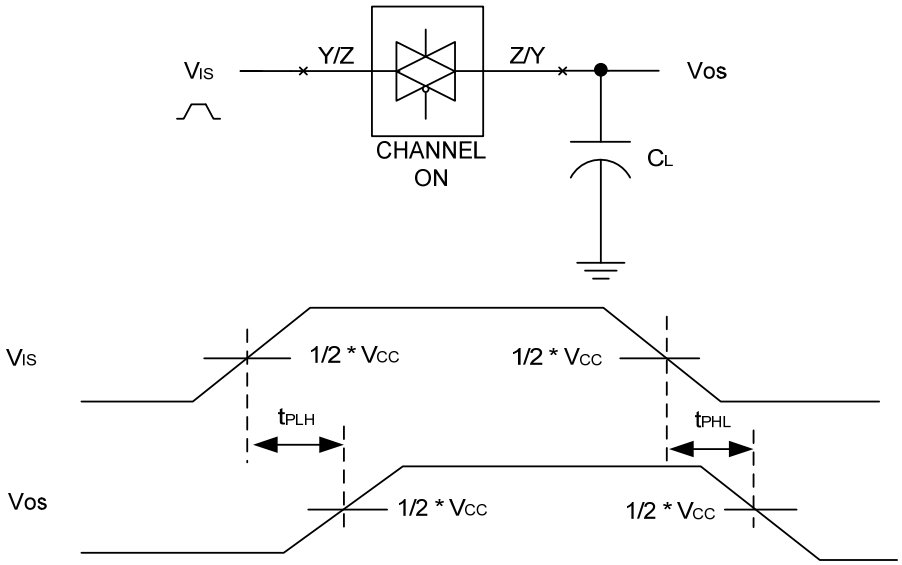

Fig-4 The input (Y/Z) to output (Z/Y) propagation delays.

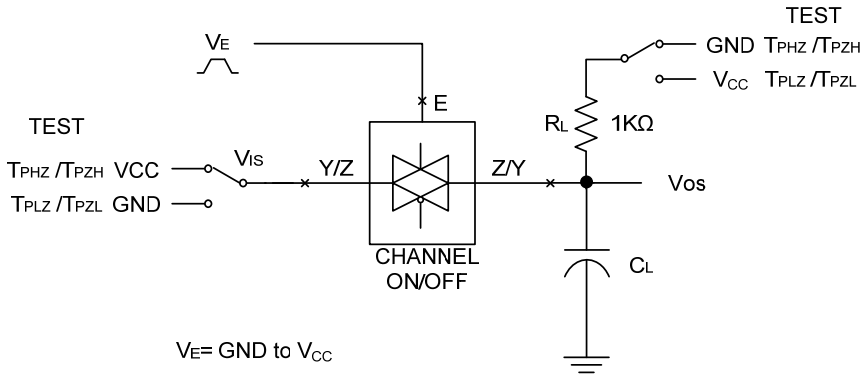

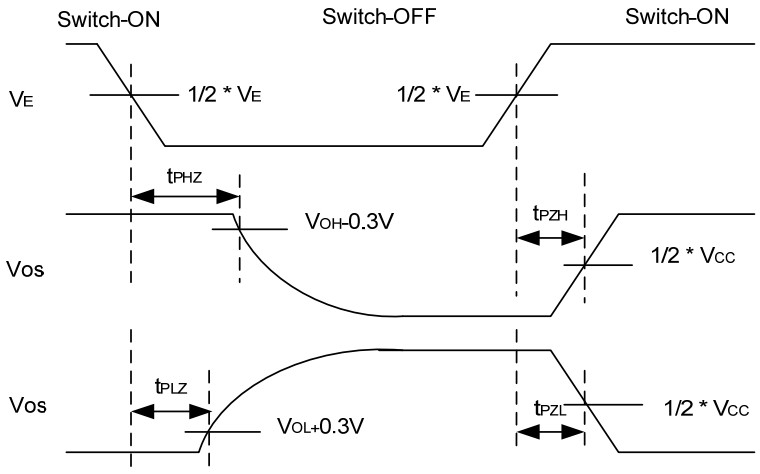

Fig-5 The switch-on and switch-off times.

■ TEST CIRCUIT AND WAVEFORMS(Cont.)

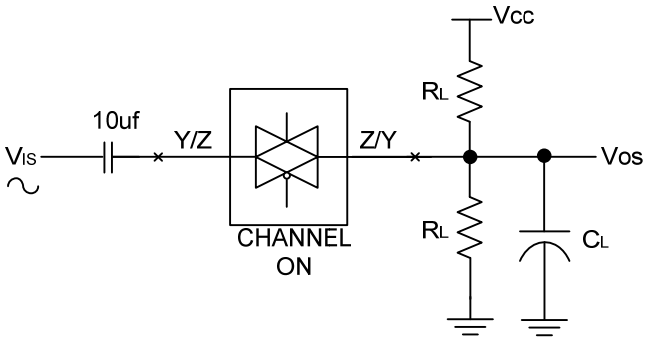

Fig-6 Sine-Wave Distortion

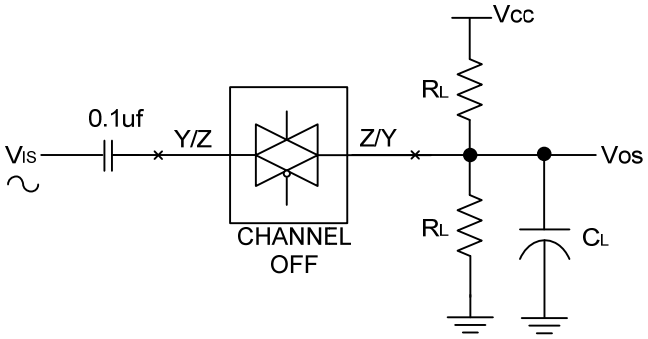

Fig-7 Feed-through Attenuation (Switch OFF)

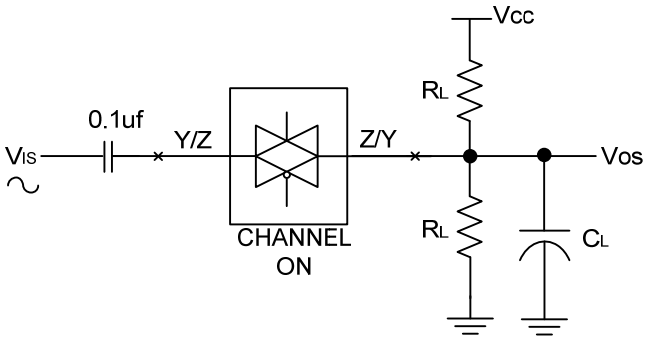

Fig-8 Minimum Frequency Response

UTC assumes no responsibility for equipment failures that result from using products at values that exceed, even momentarily, rated values (such as maximum ratings, operating condition ranges, or other parameters) listed in products specifications of any and all UTC products described or contained herein. UTC products are not designed for use in life support appliances, devices or systems where malfunction of these products can be reasonably expected to result in personal injury. Reproduction in whole or in part is prohibited without the prior written consent of the copyright owner. The information presented in this document does not form part of any quotation or contract, is believed to be accurate and reliable and may be changed without notice.