UTC U651 LINEAR INTEGRATED CIRCUIT

SINGLE OUTPUT HALL EFFECT LATCH

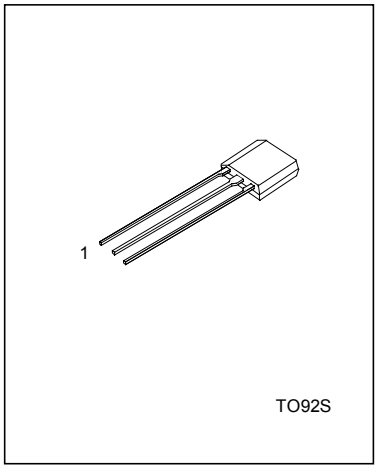

1: Vcc 2: GND 3: OUTPUT

GENERAL DESCRIPTION

The UTC U651 is a Integrated Hall sensor with latch designed for electronic commutation of brushless DC motor applications. The device includes an on-chip Hall voltage generator for magnetic sensing, a comparator that amplifies the Hall voltage, and a Schmitt trigger to provide switching hysteresis for noise rejection, and open-collector output. An internal bandgap regulator is used to provide temperature compensated supply voltage for internal circuits and allows a wide operating supply range.

FEATURES

*3.5V to 20V operation
*On-chip Hall sensor with two different sensitivity and hysteresis settings.
*Internal bandgap regulator allows temperature compensated operations and a wide operating voltage range.
*Open-Collector 25mA Output.
*Reverse Polarity Protection.

BLOCK DIAGRAM

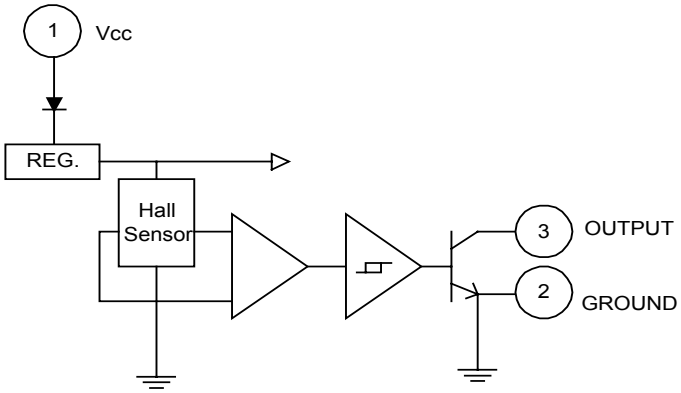

PIN DESCRIPTIONS

NAME	P/I/O	PIN NO.	DESCRIPTION
Vcc	P	1	Positive Power Supply
Vss	P	2	Ground
DO	O	3	OUTPUT Pin

ABSOLUTE MAXIMUM RATINGS(Ta=25°C)

CHARACTERISTIC	SYMBOL	VALUE	UNIT
Supply Voltage	Vcc	20	V
Reverse Vcc Polarity Voltage	VRCC	-20	V
Magnetic flux density	B	Unlimited	
Output OFF Voltage	Vce	30	V
Output ON Current	Ic	30	mA
Operating Temperature Range	Ta	0 ~ 70	°C
Storage Temperature Range	Ts	-65 ~ 150	°C
Package Power Dissipation	Pd	400	mW

ELECTRICAL CHARACTERISTICS(Ta=25°C,Vcc=3.5V to 20V)

CHARACTERISTIC	SYMBOL	TEST CONDITION	MIN	TYP.	MAX	UNIT
Operating Supply Voltage	Vcc		8		20	V
Output Saturation Voltage	Vce(sat)	Vcc=14V,Ic=20mA		300	700	mV
Output Leakage Current	Icex	Vce=14V,Vcc=14V		<0.1	10	uA
Supply Current	Icc	Vcc=20V, Output Open		5	10	mA
Output Rise Time	tr	Vcc=14V,RL=820Ω,CL=20pF		0.3	1.5	us
Output Falling Time	tf	Vcc=14V,RL=820Ω,CL=20pF		0.3	1.5	us

MAGNETIC CHARACTERISTICS

CHARACTERISTIC	SYMBOL	Ta=25°C		Ta=0 ~ 70°C		UNIT
		Min	Max	Min	Max	
Operate Point	Bop	10	120	5	120	G
Release Point	Brp	-120	-10	-120	-5	G
Hysteresis	Bhys	20	240	10	240	G

CLASSIFICATION OF OPERATING POINT

RANK	A		B	
Bop	10	70	60	120
Brp	-10	-70	-60	-120
Bhys	20	140	120	240

TEST CIRCUIT

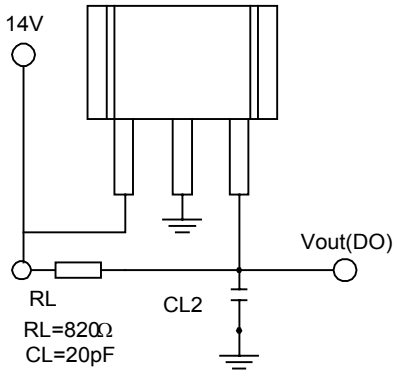

UTC assumes no responsibility for equipment failures that result from using products at values that exceed, even momentarily, rated values (such as maximum ratings, operating condition ranges, or other parameters) listed in products specifications of any and all UTC products described or contained herein. UTC products are not designed for use in life support appliances, devices or systems where malfunction of these products can be reasonably expected to result in personal injury. Reproduction in whole or in part is prohibited without the prior written consent of the copyright owner. The information presented in this document does not form part of any quotation or contract, is believed to be accurate and reliable and may be changed without notice.