SHINDENGEN

General Purpose Rectifiers

UL Bridges

U4SBA20

200V 4A

FEATURES

- Thin Single In-Line Package
- UL Recognized
  (UL File No.E142422)
- High IFSM
- Applicable to Automatic Insertion

APPLICATION

- Switching power supply
- Home Appliances, Office Equipment
- Telecommunication, Factory Automation

OUTLINE DIMENSIONS

Case : 3S

(Unit : mm)

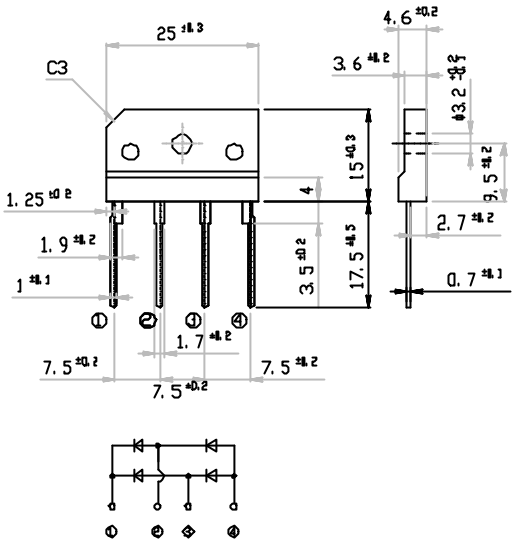

RATINGS

●Absolute Maximum Ratings (If not specified Tc=25°C)

Item	Symbol	Conditions	Ratings	Unit
Storage Temperature	Tstg		-40～150	°C
Operating Junction Temperature	Tj		150	°C
Maximum Reverse Voltage	V_{RM}		200	V
Average Rectified Forward Current	I_O	50Hz sine wave, R-load With heatsink Tc=108°C	4	A
		50Hz sine wave, R-load Without heatsink Ta=25°C	2.3	
Peak Surge Forward Current	I_{FSM}	50Hz sine wave, Non-repetitive 1cycle peak value, Tj=25°C	80	A
Current Squared Time	I^2t	1ms≦t＜10ms Tj=25°C	32	A^2s
Dielectric Strength	Vdis	Terminals to case, AC 1 minute	2	kV
Mounting Torque	TOR	Recommended torque : 0.5N･m)	0.8	N･m

●Electrical Characteristics (If not specified Tc=25°C)

Item	Symbol	Conditions	Ratings	Unit
Forward Voltage	V_F	IF=2A, Pulse measurement, Rating of per diode	Max.1.05	V
Reverse Current	I_R	$V_R=V_{RM}$, Pulse measurement, Rating of per diode	Max.10	μA
Thermal Resistance	θjc	junction to case With heatsink	Max.5.5	°C/W
	θjl	junction to lead Without heatsink	Max.6	
	θja	junction to ambient Without heatsink	Max.30	

Copyright & Copy;2000 Shindengen Electric Mfg.Co.Ltd

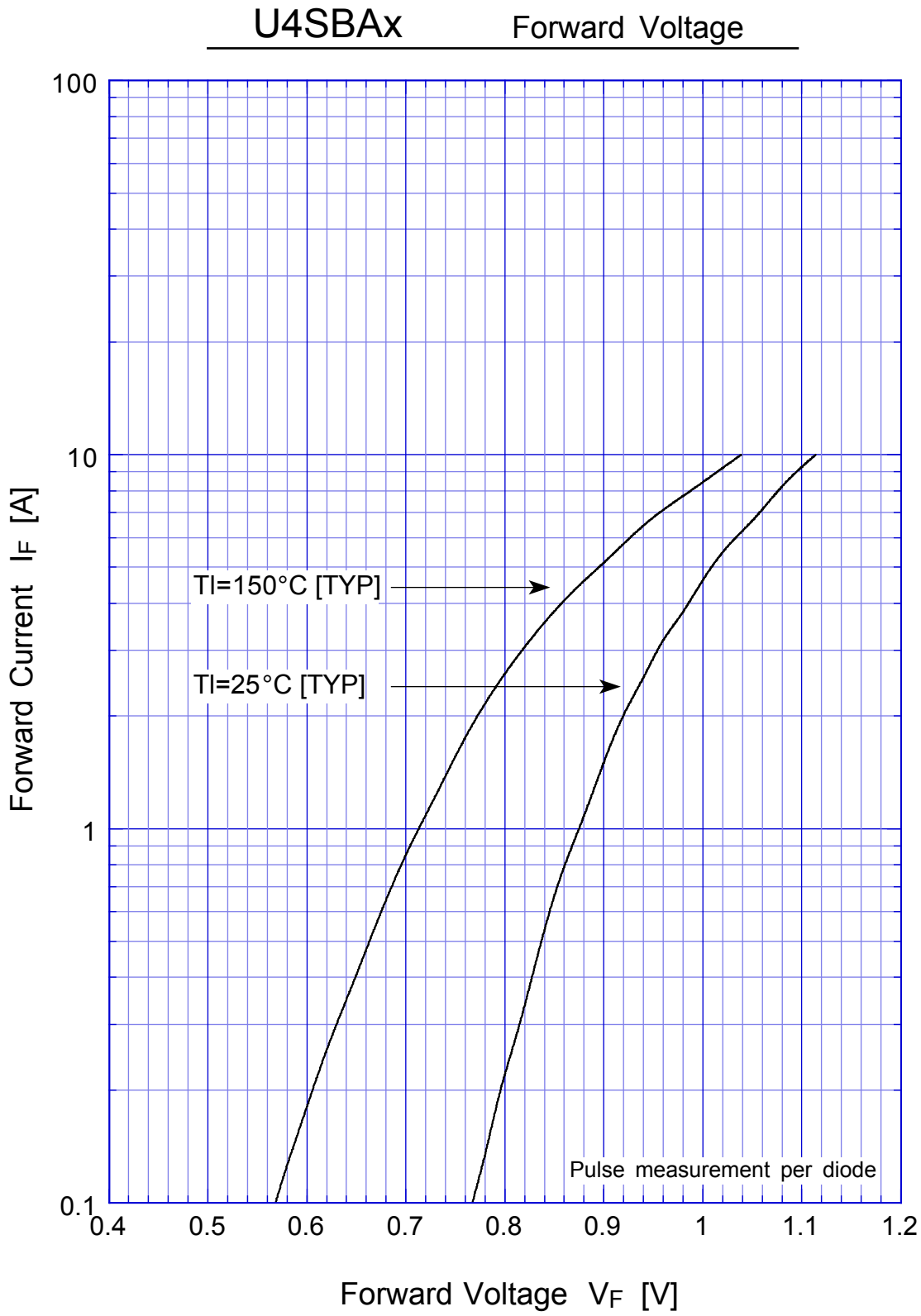
U4SBAx
Forward Voltage
100
10
1
0.1
0.4
0.5
0.6
0.7
0.8
0.9
1
1.1
1.2
Forward Current IF [A]
Forward Voltage VF [V]
Tl=150°C [TYP]
Tl=25°C [TYP]
Pulse measurement per diode

U4SBAx Forward Power Dissipation

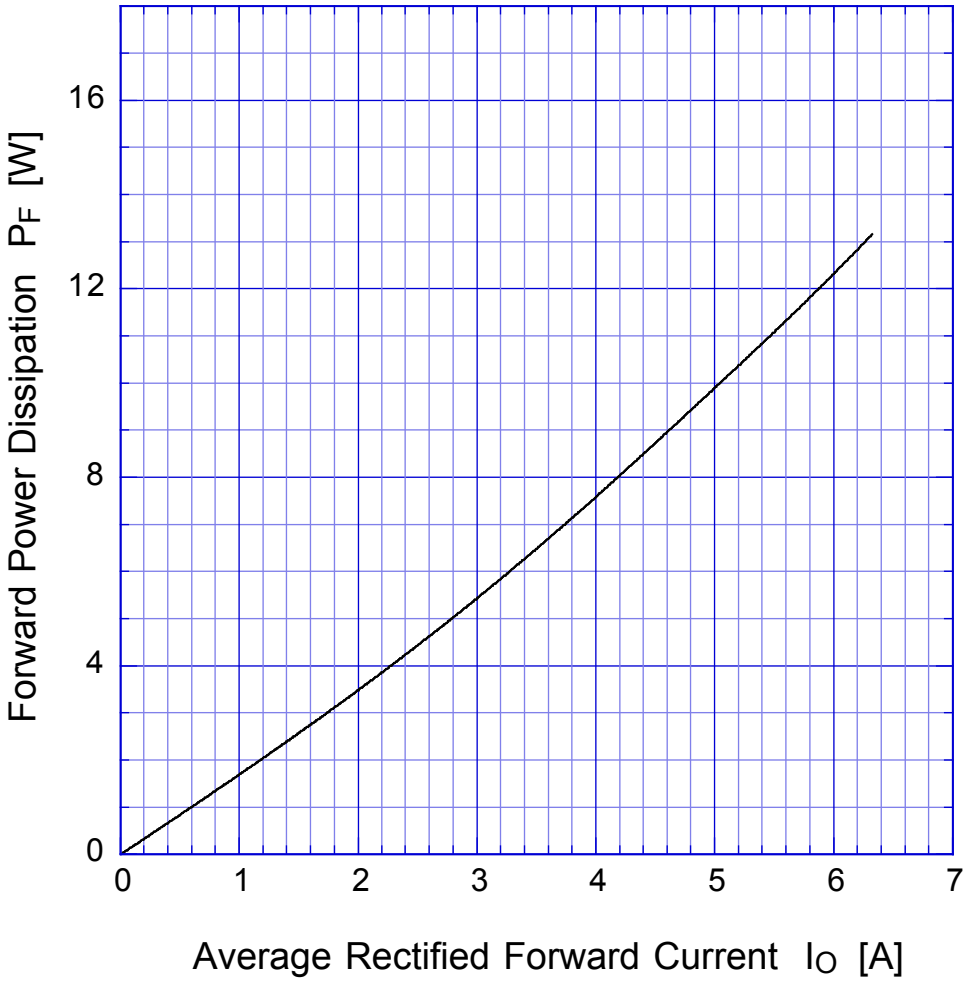

Tj= 150°C
Sine wave

U4SBAx Derating Curve

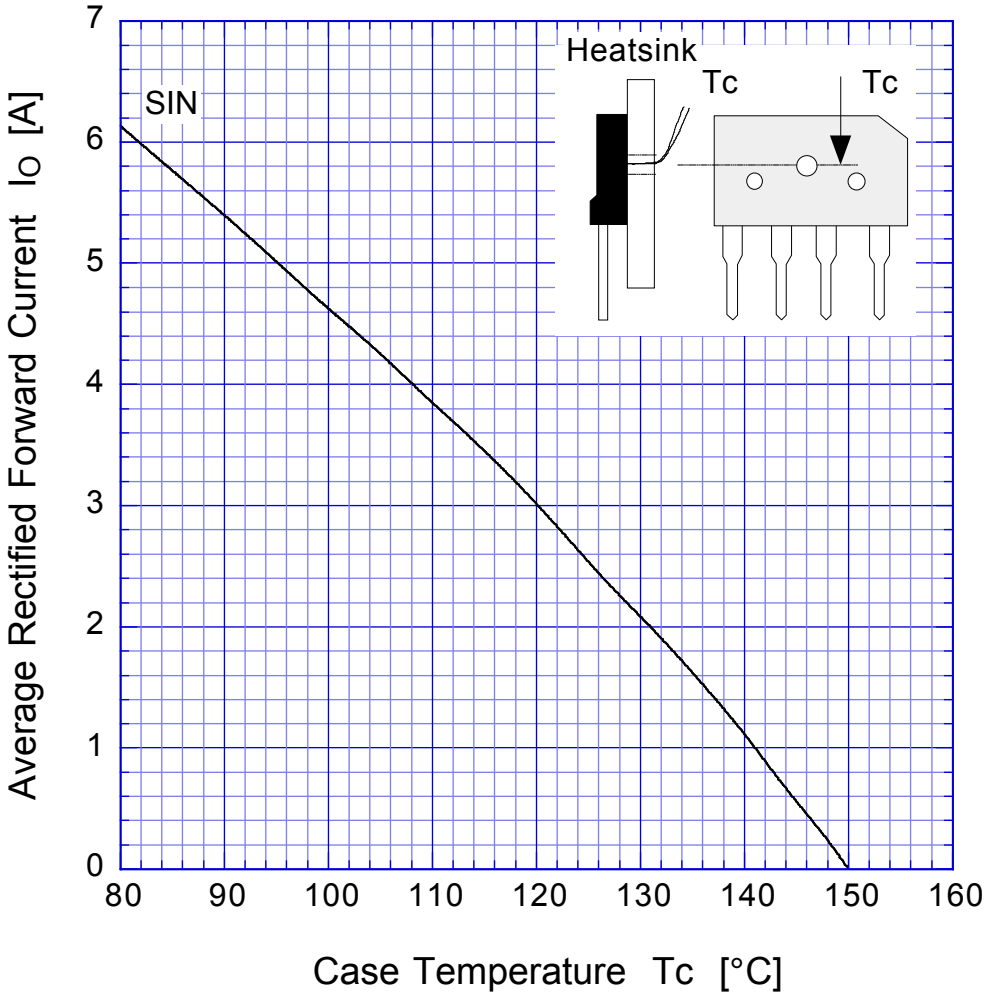

Sine wave
R-load
with heatsink

U4SBAx Derating Curve

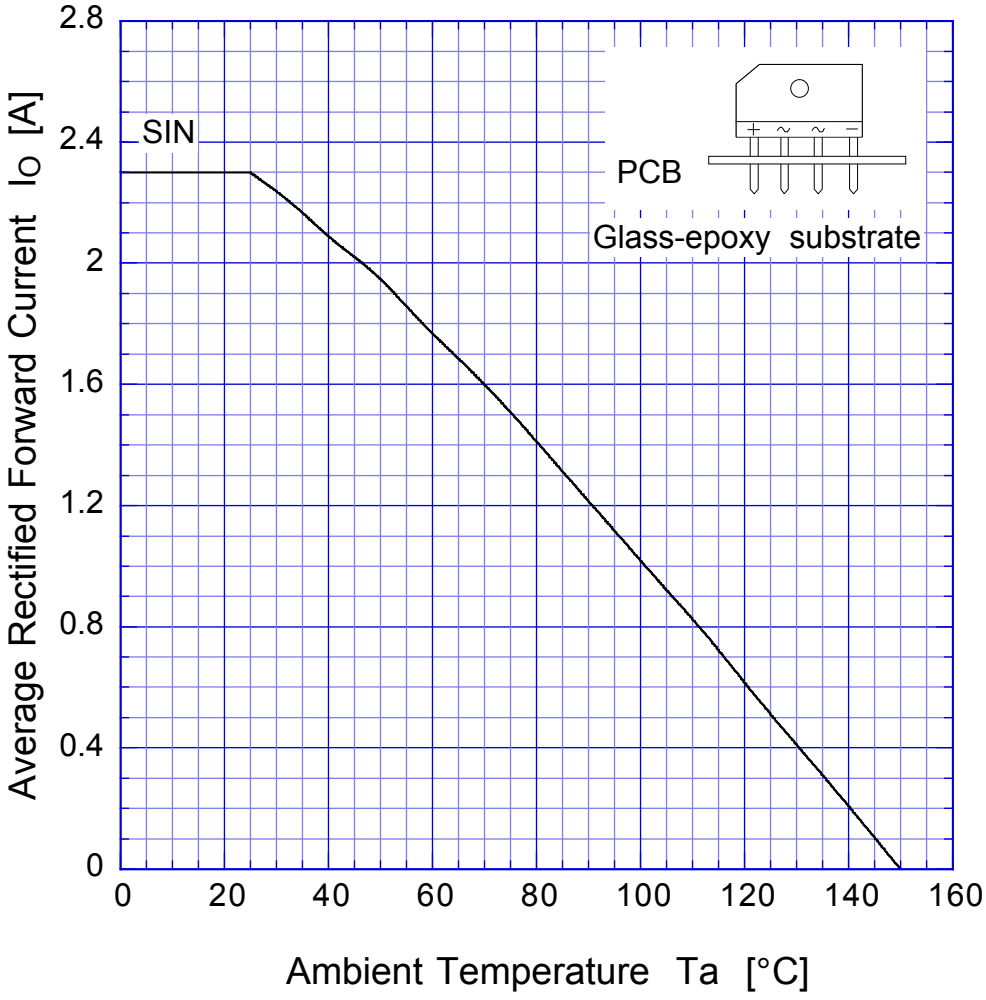

Sine wave
R-load
Free in air

U4SBAx Peak Surge Forward Capability

