One-Shot Phase Control

Description

The monolithic integrated bipolar circuit, U490B, is a one-shot power control circuit, designed to control the thyristor which is mainly used in electric stapler devices. The IC is preferred to realise a one-shot phase control, where any phase angle and thus any intensity of the load voltage is adjustable.

After successful triggering and the following delay time, an ignition pulse at the output is released. A further triggering is only possible after the elapse of the delay time.

Features

- Phase controlled thyristor ignition
- Triggering with time delay
- Repetition time delay
- Supply current ≦2 mA
- Mains supply via resistor

Applications

- Electric stapler devices

Package: DIP8, SO8

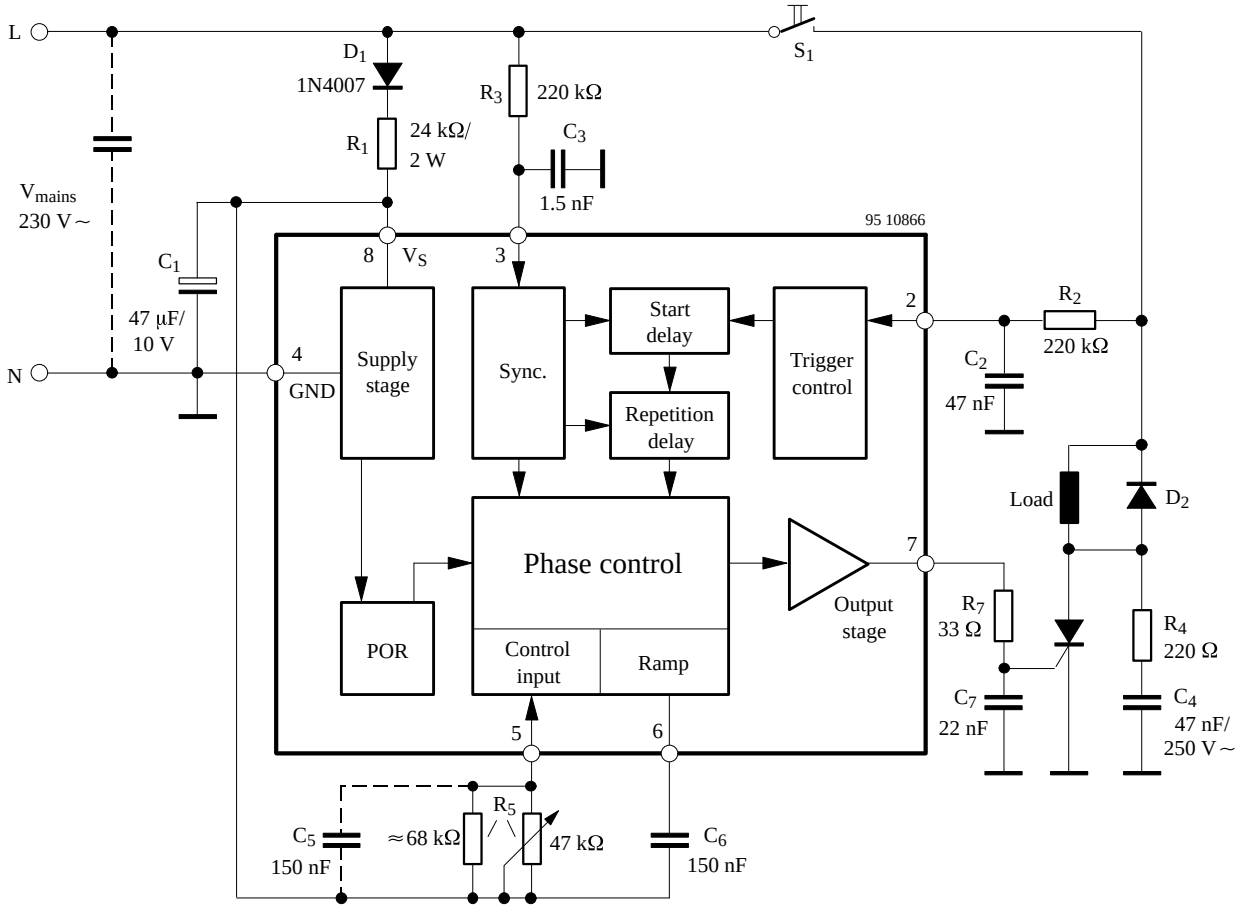

Figure 1. Block diagram with external circuit

Pin Description

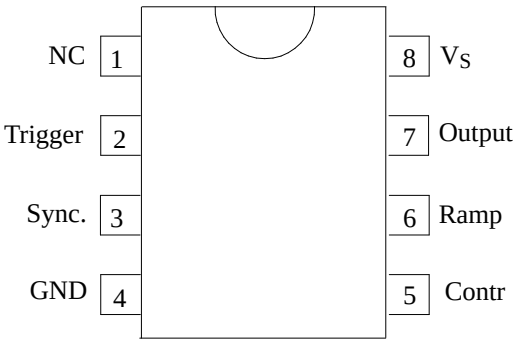

Pin	Symbol	Function
1	NC	Not connected
2	Trigger	Triggering
3	Sync.	Synchronization
4	GND	Ground
5	Contr	Control input
6	Ramp	Ramp
7	Output	Output
8	V_S	Supply voltage

Supply, Pin 8

Internal voltage limiter enables a simple supply from the mains via series resistor R_1.The supply voltage between Pin 8 (V_S) and ground (Pin 4) builts up via R_1 and is smoothed by the capacitor C_1.

Series resistor R_1 can be calculated as follows:

$$R_{1max} \approx 0.85 \text{ x } \frac{V_{mains} - V_{Smax}}{2 \text{ x } I_{tot}} \text{ where}$$

V_{mains} = Mains supply voltage
V_{Smax} = Maximum supply voltage
I_{tot} = $I_{Smax} + I_X$
I_{Smax} = Maximum current consumption of the IC
I_X = Current consumption of the external components

Phase Control, Pins 3, 5 and 6

The circuit is synchronized with mains supply through Pin 3. As long as the switch S_1 is open, the circuit is in wait state i.e., the capacitor C_6 (150 nF) is discharged and is kept in this state (High level). When the switch S_1 is closed, there is a current flow in Pin 2 which is evaluated by the circuit. If this current flows after the elapse of delay time, then the phase control is released. Capacitor, C_6, is then charged with $I_6 = 100$ µA towards ground. At the same time, there is a current flow of ≈ 100 µA into Pin 5, which results in voltage drop across resistor R_5. Control voltage, V_5, is then 1.5 V lower internally.

The output stage is released when the ramp voltage V_6 is equal to ($V_5 - 1.5$ V). When the voltage difference is ≈ 150 mV, it is again turned–off.

The result is an output pulse, whose phase shift to the zero crossing of mains voltage is determined by the resistor R_5 at control input Pin 5 (see fig. 2). Capacitor C_6 is charged to a value of ≈ 1.5 V. It remains there till the switch S_1 again opens and the repetition delay time is over.

The circuit is released, when four periods of the line voltage have expired after build up of the operating voltage, before the switch S_1 is closed.

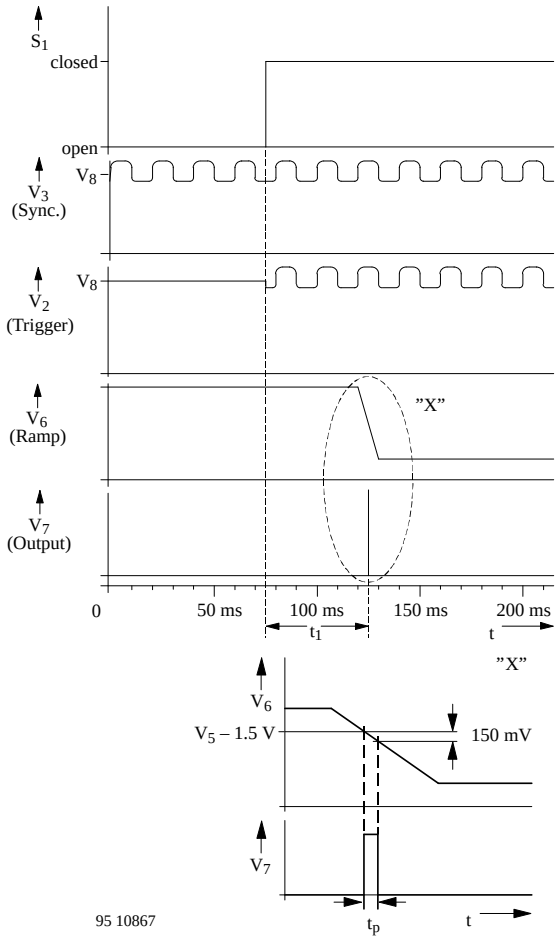

Figure 2. Signal characteristics

Absolute Maximum Ratings

Reference point Pin 4 (GND), unless otherwise specified

Parameters		Symbol	Value	Unit
Supply current $t \leq 10\ \mu s$	Pin 8	I_S i_s	30 150	mA
Output stage Input voltage	Pin 7	V_I	-0.5 V to V_S	
Input current $t \leq 1$ ms	Pin 2, 3	$\pm I_I$	5 30	mA
Input voltage	Pin 5, 6	V_I	0 V to V_8	
Junction temperature		T_j	+125	°C
Ambient temperature		T_{amb}	-10 to +100	°C
Storage temperature range		T_{stg}	-40 to +125	°C

Thermal Resistance

Parameters		Symbol	Value	Unit
Junction ambient	DIP8 SO8 on p.c. SO8 on ceramic	R_{thJA}	110 220 140	K/W

Electrical Characteristics

$V_S = 7$ V, $T_{amb} = 25$°C, reference point Pin 4 (GND), unless otherwise specified

Parameters	Test Conditions / Pins	Symbol	Min.	Typ.	Max.	Unit
Supply voltage limitation	$I_S = 3$ mA Pin 8 $I_S = 30$ mA	V_S	7.2 7.4	8.2 8.4	9.2 9.4	V
Current consumption	$V_S = 7$ V Pin 8	I_S			2	mA
Voltage monitoring	Pin 8					
Switch-on threshold Switch-off threshold		V_{Son} V_{Soff}		5 3		V
Synchronization	Pin 3					
Voltage limitation	$I_3 = 1$ mA Pin 3 - 8 $I_3 = -1$ mA	V_{lim} $-V_{lim}$		1.5 0.75		V
Switch-on threshold Switch-off threshold	Pin 3	I_{Ton} I_{Toff}		120 35		µA
Trigger input	Pin 2					
Voltage limitation	$I_2 = 1$ mA Pin 2 - 8 $I_2 = -1$ mA	V_{lim} $-V_{lim}$		1.5 0.75		V
Switch-on threshold Switch-off threshold	Pin 2	I_{Ton} I_{Toff}		120 35		µA
Start delay time Repetition delay time	$f_{mains} = 50$ Hz Pin 2-7	t_1 t_2	40 60		60 80	ms

Parameters	Test Conditions / Pins	Symbol	Min.	Typ.	Max.	Unit
Phase control	Pin 5, 6, 3					
Control input: Input voltage range Input current	Pin 5 $2\ V \le V_5 \le V_8$	 V_I I_I	 2 50	 90	 V_S 130	 V µA
Ramp	Pin 6					
Charge current Discharge current	$2V \le V_6 \le V_8 - 0.5\ V$ $U_5 = 4\ V$	I_{ch} $-I_{dis}$	50 2	90	130	µA mA
Phase shift	Pin 7-5					
	$C_6 = 150$ nF $V_5 = 2\ V$	t_{dmax}		7		ms
	$V_5 = V_8$	t_{dmin}		600		µs
Output stage, $V_7 = 0\ V$	Pin 7					
Output reverse current Output current	Status OFF Status ON	$\pm I_{o(r)}$ $-I_o$	 100		10	µA mA
Pulse width	$C_6 = 150$ nF, see figure 2	t_p	100	200	300	µs

Dimensions in mm

Package: DIP8

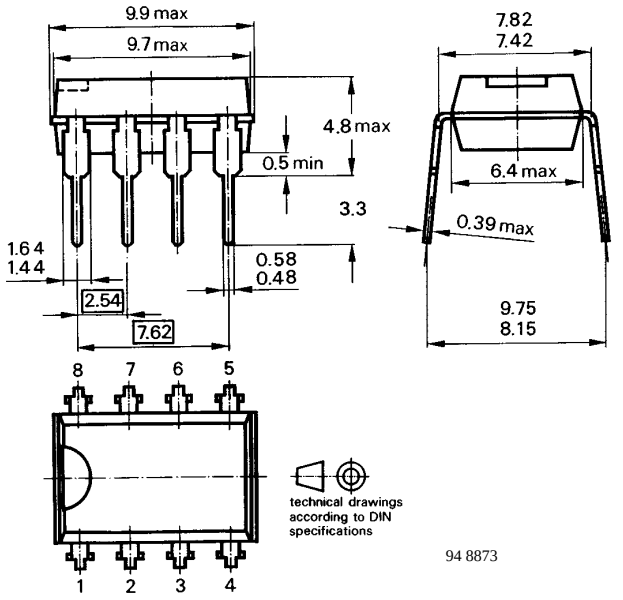

Package: SO8

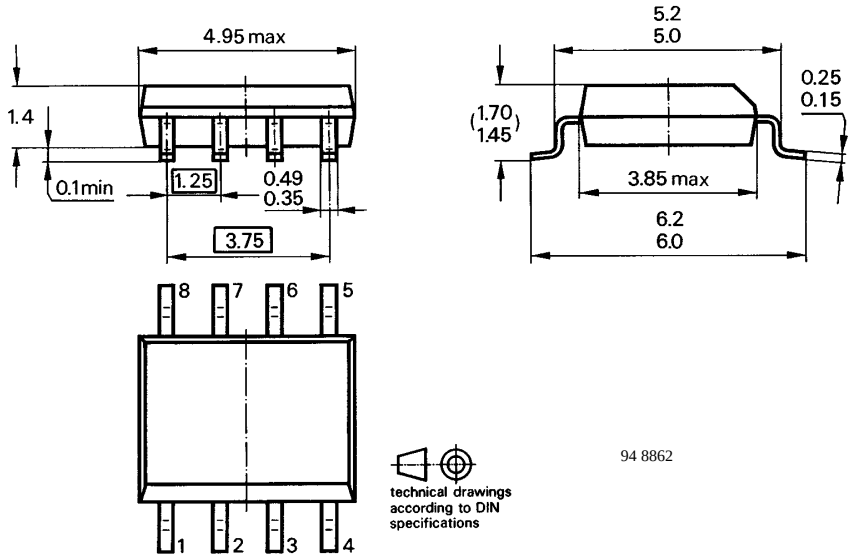

Ozone Depleting Substances Policy Statement

It is the policy of **TEMIC TELEFUNKEN microelectronic GmbH** to

1. Meet all present and future national and international statutory requirements.

2. Regularly and continuously improve the performance of our products, processes, distribution and operating systems with respect to their impact on the health and safety of our employees and the public, as well as their impact on the environment.

It is particular concern to control or eliminate releases of those substances into the atmosphere which are known as ozone depleting substances (ODSs).

The Montreal Protocol (1987) and its London Amendments (1990) intend to severely restrict the use of ODSs and forbid their use within the next ten years. Various national and international initiatives are pressing for an earlier ban on these substances.

TEMIC TELEFUNKEN microelectronic GmbH semiconductor division has been able to use its policy of continuous improvements to eliminate the use of ODSs listed in the following documents.

1. Annex A, B and list of transitional substances of the Montreal Protocol and the London Amendments respectively

2. Class I and II ozone depleting substances in the Clean Air Act Amendments of 1990 by the Environmental Protection Agency (EPA) in the USA

3. Council Decision 88/540/EEC and 91/690/EEC Annex A, B and C (transitional substances) respectively.

TEMIC can certify that our semiconductors are not manufactured with ozone depleting substances and do not contain such substances.

We reserve the right to make changes to improve technical design and may do so without further notice.
Parameters can vary in different applications. All operating parameters must be validated for each customer application by the customer. Should the buyer use TEMIC products for any unintended or unauthorized application, the buyer shall indemnify TEMIC against all claims, costs, damages, and expenses, arising out of, directly or indirectly, any claim of personal damage, injury or death associated with such unintended or unauthorized use.

TEMIC TELEFUNKEN microelectronic GmbH, P.O.B. 3535, D-74025 Heilbronn, Germany
Telephone: 49 (0)7131 67 2831, Fax number: 49 (0)7131 67 2423