Features

- **10 kV – ESD Protection**
- **Two Comparators with Common Reference**
- **Tight Threshold Tolerance**
- **Constant Threshold**
- **NPN Output**
- **Interference and Damage-protection According to VDE 0839 and ISO/CD 7637 EMI Protection**
- **Reversal Polarity Protection**
- **Load-dump Protection**

Pb Lead Free

Current Monitor IC

U4793B

1. Description

The bipolar U4793B is designed to monitor overload or a short circuit in automotive or industrial applications. The threshold is tied to $V_{4,6} = V_S - V_T$ where $V_T = 44.5$ mV. It is independent of the supply voltage, V_S. If the voltage drop across shunt resistor, R_{sh}, exceeds this value, the output is turned on, otherwise the output is turned off.

Without supply voltage or open input pin 8, the output is turned off. The output breakdown voltage is determined by the Z-diodes Z_3 and Z_5 with a typical value of $V_Z = 22$V.

An unused comparator input must be connected to pin 7.

2. Block Diagram

Figure 2-1. Schematic and Application Circuit

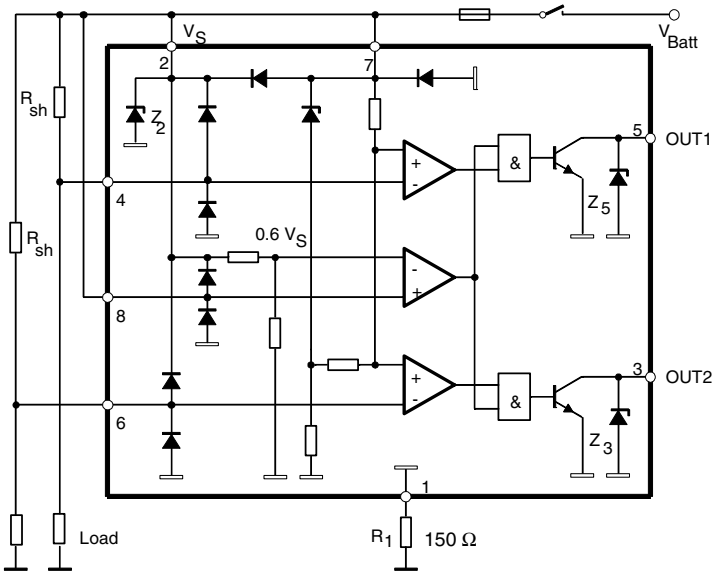

Rev. 4557B–AUTO–09/05

3. Pin Configuration

Figure 3-1. Pinning DIP8/SO8

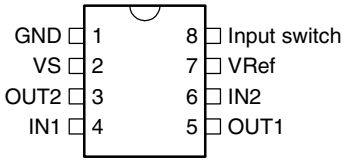

Table 3-1. Pin Description

Pin	Symbol	Function
1	GND	Reference point, ground
2	VS	Supply voltage
3	OUT2	Output 2
4	IN1	Input 1
5	OUT1	Output 1
6	IN2	Input 2
7	VRef	Reference voltage
8	Input switch	Input switch

4. Absolute Maximum Ratings

Stresses beyond those listed under “Absolute Maximum Ratings” may cause permanent damage to the device. This is a stress rating only and functional operation of the device at these or any other conditions beyond those indicated in the operational sections of this specification is not implied. Exposure to absolute maximum rating conditions for extended periods may affect device reliability.

Parameters	Symbol	Value	Unit
Supply voltage; pins 2 and 7	V_S	16.5	V
Current consumption t = 2 ms, measured at pin 1 (GND), pin 1	I_1	1.5	A
Output current, pins 3 and 5	$I_{3,5}$	20	mA
Input voltage reference point pin 7, pins 4 and 6	$-V_{4,6}$	6	V
Power dissipation, T_{amb} = 125°C DIP8 SO8	P_{tot}	 220 150	 mW mW
T_{amb} = 95°C DIP8 SO8	P_{tot}	 420 360	 mW mW
T_{amb} = 60°C DIP8 SO8	P_{tot}	 690 560	 mW mW
Ambient temperature range	T_{amb}	–40 to +125	°C
Storage temperature range	T_{stg}	–55 to +125	°C
Junction temperature	T_j	150	°C

5. Thermal Resistance

Parameters	Symbol	Value	Unit
Junction ambient DIP8 SO8	 R_{thJA} R_{thJA}	 110 160	 K/W K/W

6. Electrical Characteristics

V_S = 9V to 15V, T_{amb} = –40°C to +125°C, unless otherwise specified (see Figure 2-1 on page 1)

No.	Parameters	Test Conditions	Pin	Symbol	Min.	Typ.	Max.	Unit	Type*
1	**Supply**								
1.1	Supply voltage		2, 7	V_S	9		15	V	A
1.2	Internal Z-diode Z_2		2	V_Z	20			V	A
1.3	Current consumption	V_S = 12V measured T_{amb} = –40°C	1	I_1	3.5	4.8	6.0	mA	C
1.4		V_S = 12V measured T_{amb} = 25°C	1	I_1	2.8	3.4	6.0	mA	A
1.5		V_S = 12V measured T_{amb} = 125°C	1	I_1	2.0	2.6	3.2	mA	C

*) Type means: A = 100% tested, B = 100% correlation tested, C = Characterized on samples, D = Design parameter

6. Electrical Characteristics (Continued)

V_S = 9V to 15V, T_{amb} = –40°C to +125°C, unless otherwise specified (see Figure 2-1 on page 1)

No.	Parameters	Test Conditions	Pin	Symbol	Min.	Typ.	Max.	Unit	Type*
2	**Output**								
2.1	Output saturation voltage	V_S = 9V, $I_{3,5}$ = 10 mA T_{amb} = 25°C	3, 5	V_{sat}			0.5	V	A
2.2	Output Z-diodes Z_3, Z_5		3, 5	V_Z	21			V	A
3	**Control Signal**								
3.1	Control signal threshold	$I_{3,5}$ = 1 mA, Figure 6-1 T_{amb} = –40°C	4, 6	$-V_T$	42	44	46	mV	C
3.2		$I_{3,5}$ = 1 mA, Figure 6-1 T_{amb} = 25°C	4, 6	$-V_T$	43	44.5	46	mV	A
3.3		$I_{3,5}$ = 1 mA, Figure 6-1 T_{amb} = 125°C	4, 6	$-V_T$	44.5	46	47.5	mV	C
3.4	Temperature coefficient of control signal threshold			TC		15		µV/K	C
3.5	Input currents Pins connected to 12V	T_{amb} = –40°C	4, 6	I_I	100		190	nA	C
3.6		T_{amb} = 25°C		I_I	60	100	150	nA	A
3.7		T_{amb} = 125°C		I_I	30		110	nA	C
3.8	Input currents Pins connected to 12V	T_{amb} = –40°C	8	I_I	5.5		7.0	µA	C
3.9		T_{amb} = 25°C		I_I	4.0	5.0	5.5	µA	A
3.10		T_{amb} = 125°C		I_I	3.0		4.5	µA	C
4	**Threshold**								
4.1	Threshold voltage	Switch identification T_{amb} = –40°C	8	V_8	0.47 × V_S		0.69 × V_S	V	C
4.2		Switch identification T_{amb} = 25°C		V_8	0.47 × V_S	0.6 V_S	0.69 × V_S	V	A
4.3		Switch identification T_{amb} = 125°C		V_8	0.47 × V_S		0.69 × V_S	V	C
5	**Switch Delay (R_L = 10 kΩ connected from Pin 3 or Pin 5 to V_{Batt})**								
5.1	Delay time Switch-on High to low	T_{amb} = –40°C	3, 5	$t_{d(on)}$	3	4	6	µs	C
5.2		T_{amb} = 25°C		$t_{d(on)}$	4	6	8	µs	C
5.3		T_{amb} = 125°C		$t_{d(on)}$	5	7	9	µs	C
5.4	Delay time Switch-off Low to high	T_{amb} = –40°C		$t_{d(off)}$	16	24	32	µs	C
5.5		T_{amb} = 25°C		$t_{d(off)}$	18	30	50	µs	A
5.6		T_{amb} = 125°C		$t_{d(off)}$	30	50	70	µs	C

*) Type means: A = 100% tested, B = 100% correlation tested, C = Characterized on samples, D = Design parameter

Figure 6-1. Timing Diagram

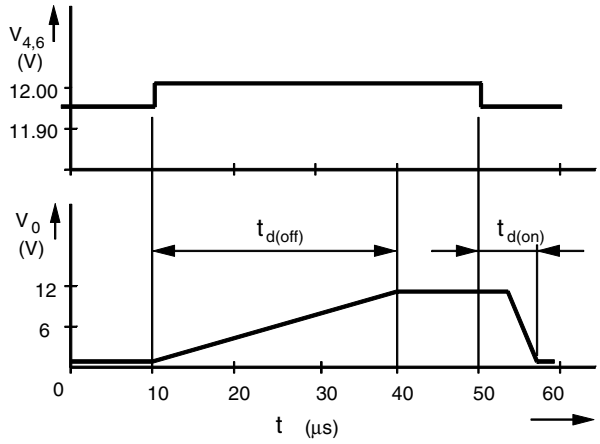

Figure 6-2. Threshold Voltage = f (V_{Batt} and Temperature)

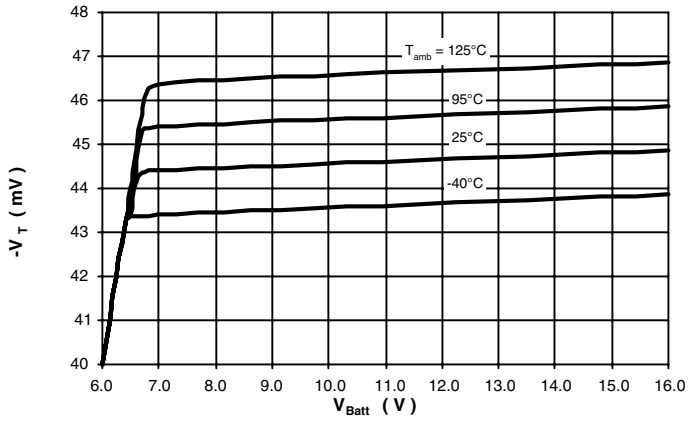

7. Ordering Information

Extended Type Number	Package	Remarks
U4793B-MY	DIP8	Tube, Pb-free
U4793B-MFPY	SO8	Tube, Pb-free
U4793B-MFPG3Y	SO8	Taped and reeled, Pb-free

8. Package Information

Package DIP8

Dimensions in mm

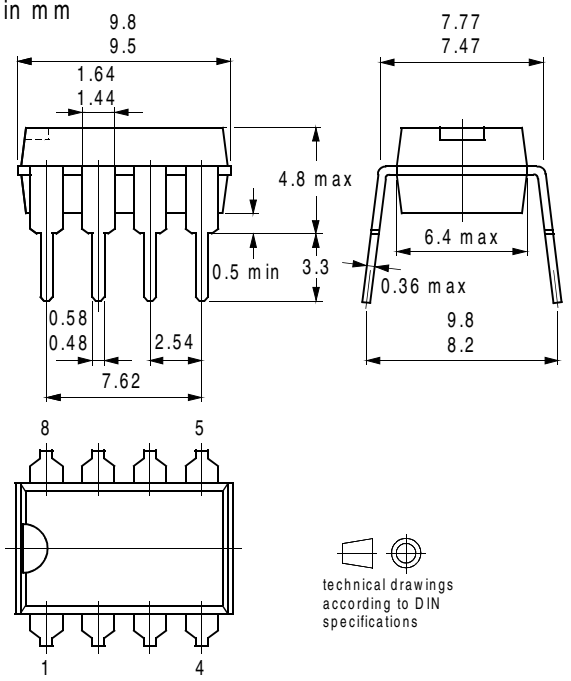

Package SO8

Dimensions in mm

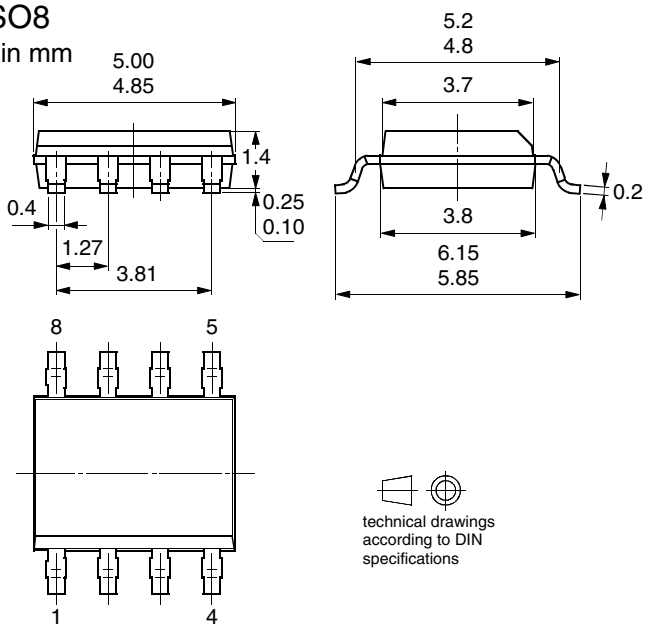

9. Revision History

Please note that the following page numbers referred to in this section refer to the specific revision mentioned, not to this document.

Revision No.	History
4557B-AUTO-09/05	• Put datasheet in a new template • Pb-free logo on page 1 added • Ordering Information on page 6 changed

Atmel Corporation

2325 Orchard Parkway
San Jose, CA 95131, USA
Tel: 1(408) 441-0311
Fax: 1(408) 487-2600

Regional Headquarters

Europe
Atmel Sarl
Route des Arsenaux 41
Case Postale 80
CH-1705 Fribourg
Switzerland
Tel: (41) 26-426-5555
Fax: (41) 26-426-5500

Asia
Room 1219
Chinachem Golden Plaza
77 Mody Road Tsimshatsui
East Kowloon
Hong Kong
Tel: (852) 2721-9778
Fax: (852) 2722-1369

Japan
9F, Tonetsu Shinkawa Bldg.
1-24-8 Shinkawa
Chuo-ku, Tokyo 104-0033
Japan
Tel: (81) 3-3523-3551
Fax: (81) 3-3523-7581

Atmel Operations

Memory
2325 Orchard Parkway
San Jose, CA 95131, USA
Tel: 1(408) 441-0311
Fax: 1(408) 436-4314

Microcontrollers
2325 Orchard Parkway
San Jose, CA 95131, USA
Tel: 1(408) 441-0311
Fax: 1(408) 436-4314

La Chantrerie
BP 70602
44306 Nantes Cedex 3, France
Tel: (33) 2-40-18-18-18
Fax: (33) 2-40-18-19-60

ASIC/ASSP/Smart Cards
Zone Industrielle
13106 Rousset Cedex, France
Tel: (33) 4-42-53-60-00
Fax: (33) 4-42-53-60-01

1150 East Cheyenne Mtn. Blvd.
Colorado Springs, CO 80906, USA
Tel: 1(719) 576-3300
Fax: 1(719) 540-1759

Scottish Enterprise Technology Park
Maxwell Building
East Kilbride G75 0QR, Scotland
Tel: (44) 1355-803-000
Fax: (44) 1355-242-743

RF/Automotive
Theresienstrasse 2
Postfach 3535
74025 Heilbronn, Germany
Tel: (49) 71-31-67-0
Fax: (49) 71-31-67-2340

1150 East Cheyenne Mtn. Blvd.
Colorado Springs, CO 80906, USA
Tel: 1(719) 576-3300
Fax: 1(719) 540-1759

Biometrics/Imaging/Hi-Rel MPU/
High Speed Converters/RF Datacom
Avenue de Rochepleine
BP 123
38521 Saint-Egreve Cedex, France
Tel: (33) 4-76-58-30-00
Fax: (33) 4-76-58-34-80

Literature Requests
www.atmel.com/literature

Disclaimer: The information in this document is provided in connection with Atmel products. No license, express or implied, by estoppel or otherwise, to any intellectual property right is granted by this document or in connection with the sale of Atmel products. **EXCEPT AS SET FORTH IN ATMEL'S TERMS AND CONDITIONS OF SALE LOCATED ON ATMEL'S WEB SITE, ATMEL ASSUMES NO LIABILITY WHATSOEVER AND DISCLAIMS ANY EXPRESS, IMPLIED OR STATUTORY WARRANTY RELATING TO ITS PRODUCTS INCLUDING, BUT NOT LIMITED TO, THE IMPLIED WARRANTY OF MERCHANTABILITY, FITNESS FOR A PARTICULAR PURPOSE, OR NON-INFRINGEMENT. IN NO EVENT SHALL ATMEL BE LIABLE FOR ANY DIRECT, INDIRECT, CONSEQUENTIAL, PUNITIVE, SPECIAL OR INCIDENTAL DAMAGES (INCLUDING, WITHOUT LIMITATION, DAMAGES FOR LOSS OF PROFITS, BUSINESS INTERRUPTION, OR LOSS OF INFORMATION) ARISING OUT OF THE USE OR INABILITY TO USE THIS DOCUMENT, EVEN IF ATMEL HAS BEEN ADVISED OF THE POSSIBILITY OF SUCH DAMAGES.** Atmel makes no representations or warranties with respect to the accuracy or completeness of the contents of this document and reserves the right to make changes to specifications and product descriptions at any time without notice. Atmel does not make any commitment to update the information contained herein. Unless specifically provided otherwise, Atmel products are not suitable for, and shall not be used in, automotive applications. Atmel's products are not intended, authorized, or warranted for use as components in applications intended to support or sustain life.

© Atmel Corporation 2005. **All rights reserved.** Atmel®, logo and combinations thereof, Everywhere You Are® and others, are registered trademarks or trademarks of Atmel Corporation or its subsidiaries. Other terms and product names may be trademarks of others.

Printed on recycled paper.

4557B–AUTO–09/05