Features

- **Adjustable DC Characteristic**
- **Transmit and Receive Gain Adjustable**
- **Symmetrical Input of Microphone Amplifier**
- **Anti-clipping in Transmit Direction**
- **Automatic Line-loss Compensation**
- **Built-in Ear Protection**
- **DTMF and MUTE Input**
- **Adjustable Sidetone Suppression Independent of Sending and Receiving Amplification**
- **Integrated Amplifier for Open-listening Operation**
- **Anti-clipping for Loudspeaker Amplifier**
- **Improved Acoustical Feedback Suppression**
- **Selectable Line Impedance**
- **Voice Switch**
- **Supply Voltages for All Functional Blocks of a Subscriber Set**
- **Operation Possible from 10-mA Line Current**
- **Filters Against EMI on Critical I/O**

Benefits

- **Complete System Integration of Analog Signal Processing on One Chip**
- **Very Few External Components**
- **Less Components for EMI protection**

Applications

- **Feature Phones**
- **Answering Machines**
- **Fax Machines**
- **Speaker Phones**

Monolithic Integrated Feature Phone Circuit

U4089B-P

1. Description

The telephone circuit U4089B-P is a linear integrated circuit for use in feature phones, answering machines and fax machines. It contains the speech circuit, sidetone equivalent and ear protection rectifiers. The circuit is line-powered and contains all components necessary for the amplification of signals and adaptation to the line.

An integrated voice switch with loudspeaker amplifier enables open-listening or hands-free operation. With an anti-feedback function, acoustical feedback during open listening can be reduced significantly. The generated supply voltage is suitable for a wide range of peripheral circuits.

Electrostatic sensitive device.
Observe precautions for handling.

Rev. 4518C–CORD–10/05

Figure 1-1. Simple Block Diagram

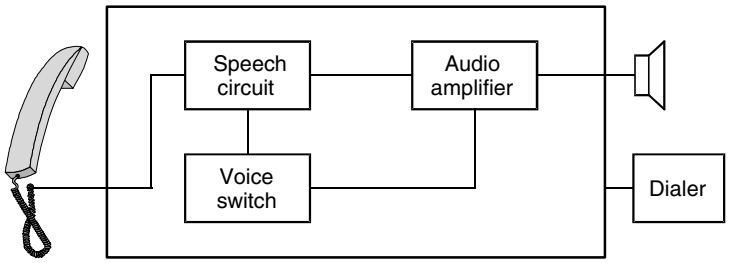

Figure 1-2. Block Diagram

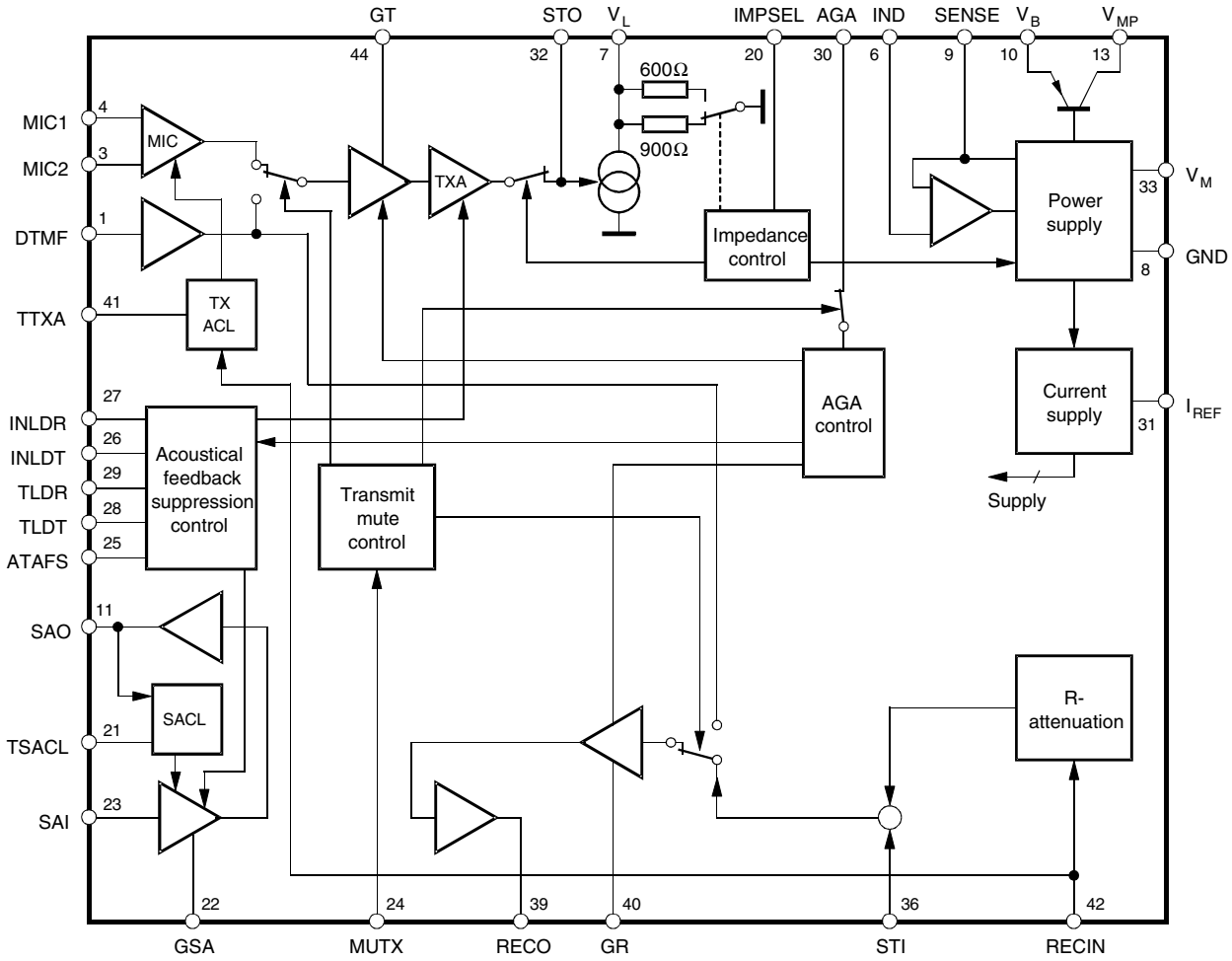

2. Pin Configuration

Figure 2-1. Pinning SSO44

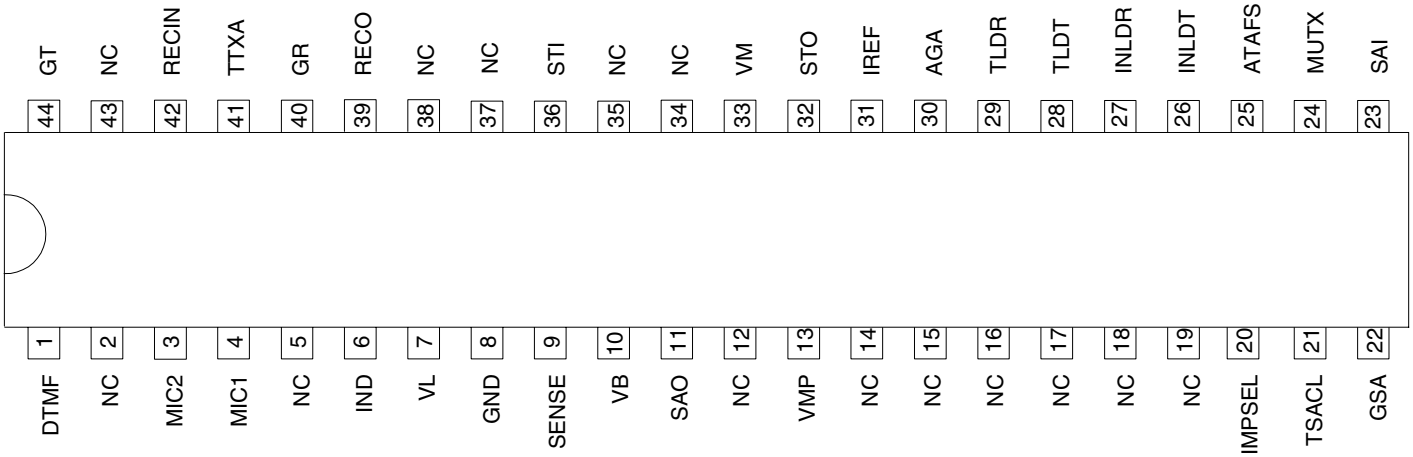

Table 2-1. Pin Description

Pin	Symbol	Function
1	DTMF	Input for DTMF signals. Also used for the answering machine and hands-free input.
3	MIC 2	Non-inverting input of microphone amplifier.
4	MIC 1	Inverting input of microphone amplifier.
6	IND	The internal equivalent inductance of the circuit is proportional to the value of the capacitor at this pin. A resistor connected to ground may be used to reduce the DC line voltage.
7	V_L	Line voltage.
8	GND	Reference point for DC and AC output signals.
9	SENSE	A small resistor (fixed) connected from this pin to V_L sets the slope of the DC characteristic, and affects the line-length equalization characteristics, and the line current at which the loudspeaker amplifier is switched on.
10	V_B	Unregulated supply voltage for peripheral circuits (voice switch); limited to typically 7V.
11	SAO	Output of loudspeaker amplifier.
13	V_{MP}	Regulated supply voltage 3.3V for peripheral circuits. The maximum output current is 2 mA.
20	IMPSEL	Control input for selection of line impedance 1) 600Ω 2) 900Ω 3) Mute of second transmit stage (TXA); also used for indication of external supply (answering machine); last chosen impedance is stored.
21	TSACL	Time constant of anti-clipping of speaker amplifier.
22	GSA	Current input for setting the gain of the speaker amplifier. Adjustment characteristic is logarithmical. For RGSA > 2 MΩ, the speaker amplifier is switched off.
23	SAI	Speaker amplifier input (for loudspeaker, tone ringer and hands-free use).

Note: Filters against electromagnetic interference (EMI) are located at pins MIC1, MIC2, RECIN and STI.

Table 2-1. Pin Description (Continued)

Pin	Symbol	Function
24	MUTX	Three-state input of transmit mute: 1) Speech condition; inputs MIC1/MIC2 active. 2) DTMF condition; input DTMF active. A part of the input signal is passed to the receiving amplifier as a confidence signal during dialing. 3) Input DTMF used for answering machine and hands-free use; receive branch is not affected.
25	ATAFS	Attenuation of acoustical feedback suppression. Maximum attenuation of AFS circuit is set by a resistor at this pin. Without the resistor, AFS is switched off.
26	INLDT	Input of transmit level detector.
27	INLDR	Input of receive level detector.
28	TLDT	Time constant of transmit level detector.
29	TLDR	Time constant of receive level detector.
30	AGA	Automatic gain adjustment with line current. A resistor connected from this pin to GND sets the starting point. Maximum gain change is 6 dB.
31	IREF	Internal reference current generation; RREF = 62 kΩ; IREF = 20 µA
32	STO	Side-tone reduction output. Output resistance is approximately 300Ω Maximum load impedance is 10 kΩ
33	V_M	Reference node for microphone-earphone and loudspeaker amplifier. Supply for electret microphone (IM ≥ 300 mA).
36	STI	Input for side-tone network.
39	RECO	Output of receiving amplifier.
40	G_R	A resistor connected from this pin to GND sets the receiving amplification of the circuit; amplifier RA1 can be muted by applying V_{MP} to G_R.
41	TTXA	Time constant of anti-clipping in transmit path.
42	RECIN	Input of receiving path; input impedance is typically 80 kΩ
44	G_T	A resistor from this pin to GND sets the amplification of microphone and DTMF signals; the input amplifier can be muted by applying V_{MP} to G_T.

Note: Filters against electromagnetic interference (EMI) are located at pins MIC1, MIC2, RECIN and STI.

3. DC Line Interface and Supply-voltage Generation

The DC line interface consists of an electronic inductance and an output stage which charges the capacitor at V_B. The value of the equivalent inductance is given by:
$L = R_{SENSE} \times C_{IND} \times (R_{DC} \times R_{30}) / (R_{DC} + R_{30})$

In order to improve the supply during worst-case operating conditions, the PNP current source (I_{BOPT}) supplies an extra amount of current to the supply voltages when the NPN in parallel is unable to conduct current.

The U4089B-P contains a series regulator which provides a supply voltage V_{MP} of 3.3V at 2 mA suitable for a microprocessor.

Figure 3-1. DC Line Interface With Electronic Inductance and Generation of Regulated and Unregulated Supply

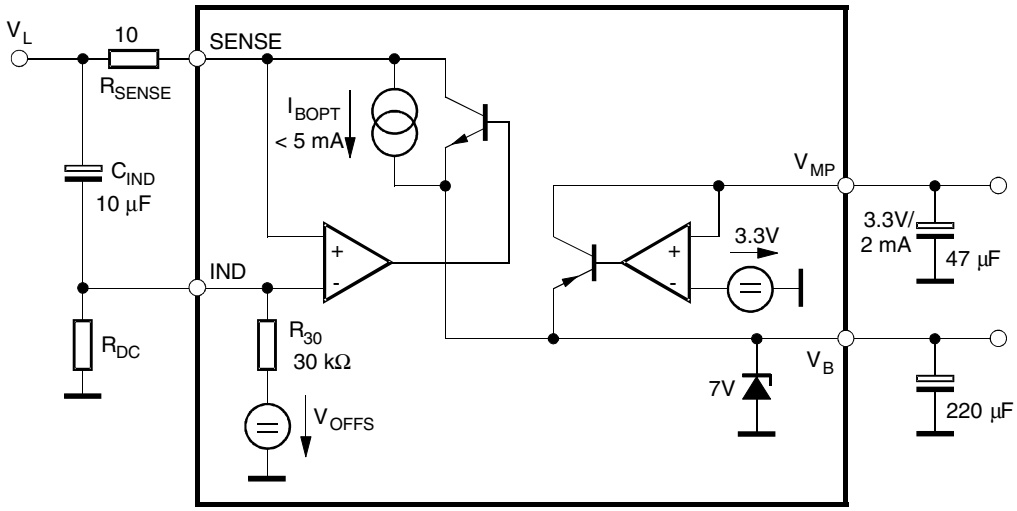

Figure 3-2. Functional Blocks for Power Supply

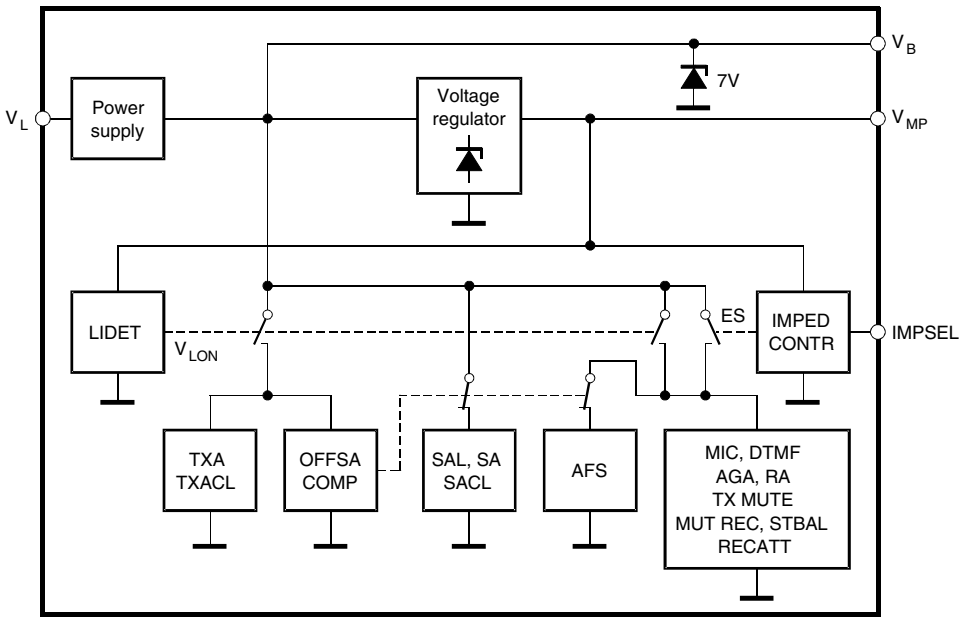

1. In speech condition, the system is supplied by the line current. If the LIDET block detects a line voltage above the fixed threshold (1.9V), the internal signal VLON is activated, thus switching on all blocks of the chip.

For line voltages below 1.9V, the switches remain in their quiescent state as shown in Figure 3-2.

OFFSACOMP disables the group listening feature (SAI, SA, SACL, AFS) below line currents of approximately 10 mA.

2. Selecting IMPSEL = high impedance activates all switches on the ES line.

4. Acoustic Feedback Suppression

Acoustical feedback from the loudspeaker to the handset microphone may cause instability in the system. The U4089B-P offers a very efficient feedback suppression circuit which uses a modified voice switch topology. Figure 4-1 shows the basic system configuration.

Two attenuators (TX ATT and RX ATT) reduce the critical loop gain by introducing an externally adjustable amount of loss either in the transmit or in the receive path. The sliding control in block ATT CONTR determines whether the TX or the RX signal has to be attenuated. The overall loop gain remains constant under all operating conditions.

Selection of the active channel is made by comparison of the logarithmically compressed TX and RX envelope curves.

The system configuration for group listening, which is realized in the U4089B-P, is illustrated in Figure 4-2. TXA and SAI represent the two attenuators; the logarithmic envelope detectors are shown in a simplified way (operational amplifiers with two diodes).

Figure 4-1. Basic Voice-switch System

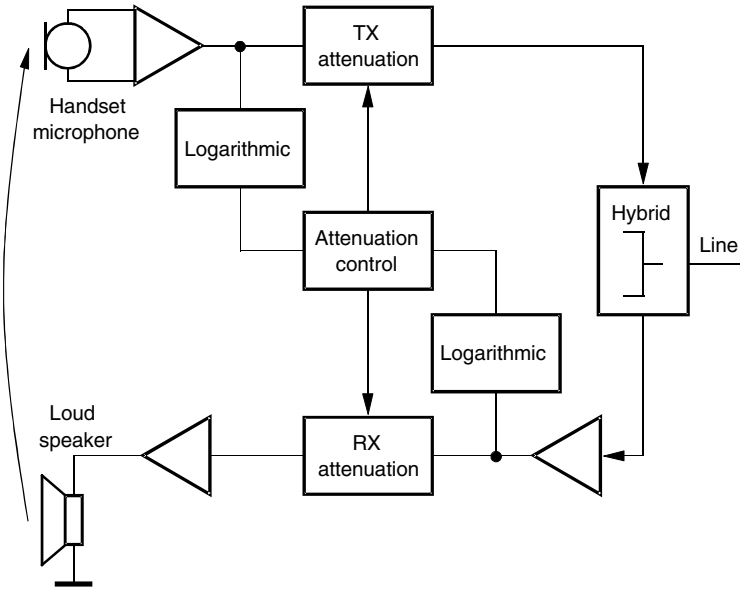

Figure 4-2. Integration of the Acoustic Feedback-suppression Circuit Into the Speech Circuit Environment

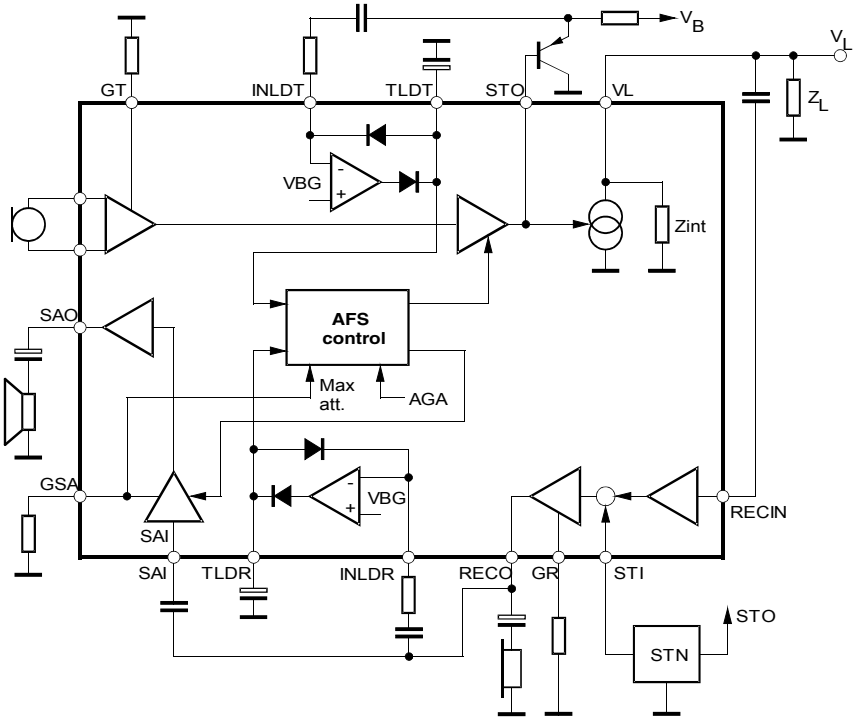

Figure 4-3. Acoustic Feedback Suppression by Alternative Control of Transmit and Speaker Amplifier Gain

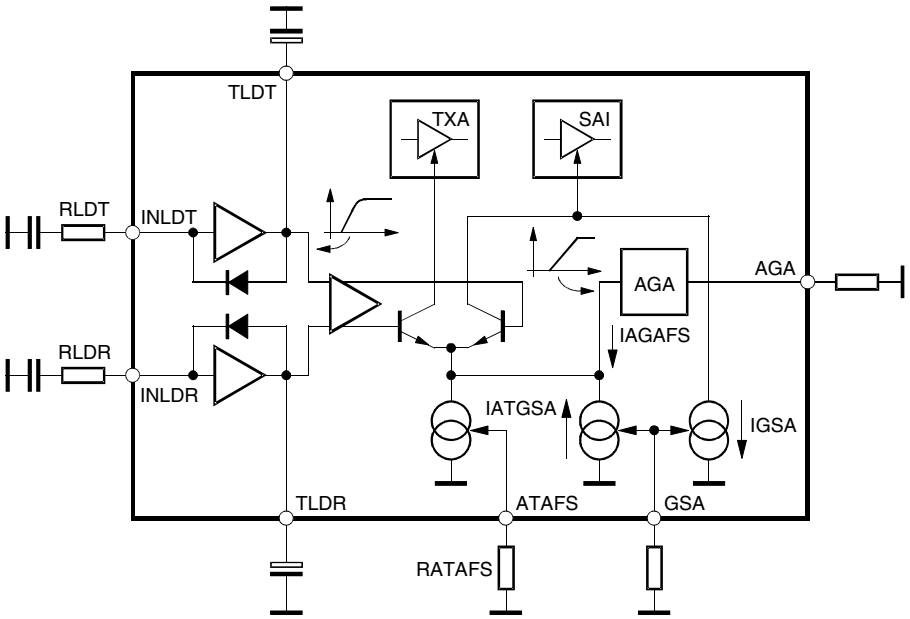

Figure 4-3 on page 7 provides a detailed diagram of the AFS (Acoustic Feedback Suppression). Receive and transmit signals are first processed by logarithmic rectifiers in order to produce the speech envelopes at TLDT and RLDT. After amplification, a decision is made by the differential pair which direction should be transmitted.

The attenuation of the controlled amplifiers TXA and SAI is determined by the emitter current IAT which is comprised of three parts:

I_{ATAFS}	sets maximum attenuation
I_{ATGSA}	decreases the attenuation when speaker amplifier gain is reduced
I_{AGAFS}	decreases the attenuation according to the loop-gain reduction caused by the AGA function

$$I_{AT} = I_{ATAFS} - I_{ATGSA} - I_{AGAFS}$$

$$\Delta G = I_{AT} \times 0.67\ dB/\mu A$$

Figure 4-4 illustrates the principal relationship between speaker amplifier gain (GSA) and attenuation of AFS (ATAFS). Both parameters can be adjusted independently, but the internal coupling between them has to be considered. The maximum GSA value to be used is 36 dB. The shape of the characteristic is moved in the x-direction by adjusting resistor RATAFS, thus changing $ATAFS_m$. The actual value of the attenuation ($ATAFS_a$), however, can be determined by reading the value which belongs to the actual gain GSA_a. If the speaker amplifier gain is reduced, the attenuation of AFS is automatically reduced by the same amount in order to achieve a constant loop gain. Zero attenuation is set for speaker gains $GSA \geq GSA0 = 36\ dB - ATAFS_m$.

Figure 4-4. Reducing Speaker Amplifier Gain Results in an Equal Reduction of AFS Attenuation

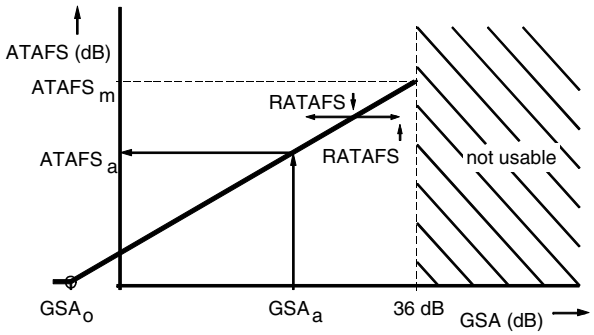

5. Operating Range of Speaker Amplifier

The basic behavior is illustrated in Figure 5-1. Actual values of IL_{ON}/IL_{OFF} vary slightly with the adjustment of the DC characteristics and the selection of the internal line impedance.

Figure 5-1. Threshold of Speaker Amplifier

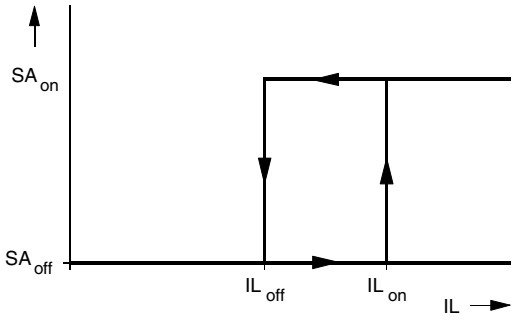

Figure 5-2. Comparator Thresholds Depend on DC Mask and Line Impedance

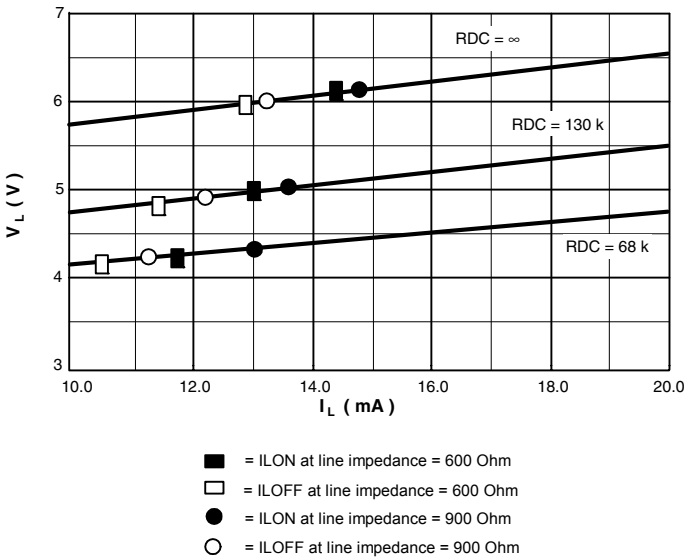

6. Absolute Maximum Ratings

Parameters	Symbol	Value	Unit
Line current	I_L	140	mA
DC line voltage	V_L	12	V
Junction temperature	T_j	125	°C
Ambient temperature	T_{amb}	–25 to +75	°C
Storage temperature	T_{stg}	–55 to +150	°C
Total power dissipation, T_{amb} = 60° C, SSO44	P_{tot}	0.9	W
ESD (Human Body Model), ESD S 5.1 Standard	V_{ESD}	1.5	kV
ESD (Machine Model), JEDEC A115A	V_{ESD}	150	V

7. Thermal Resistance

Parameters	Symbol	Value	Unit
Junction ambient	R_{thJA}	70	K/W

8. Electrical Characteristics

f = 1 kHz, 0 dBm = 775 mV_{rms}, I_M = 0.3 mA, I_{MP} = 2 mA, RDC = 130 kΩ, T_{amb} = 25° C, RGSA = 560 kΩ, Z_{ear} = 68 nF + 100Ω, Z_M = 68 nF, Pin 30 open (AGA), V_{MUTX} = GND, see Figure 8-11 on page 22 (AC tests), unless otherwise specified.

Parameters	Test Conditions	Pin	Symbol	Min.	Typ.	Max.	Unit
DC Characteristics (see Figure 8-8 on page 19)							
DC voltage drop over circuit	I_L = 2 mA I_L = 14 mA I_L = 60 mA I_L = 100 mA		V_L	 4.6 8.8	2.4 5.0 7.5 9.4	 5.4 10.0	V V V V
Transmission Amplifier, I_L = 14 mA, V_{MIC} = 2 mV, RGT = 27 kΩ, unless otherwise specified							
Adjustment range of transmit gain			G_T	40	45	50	dB
Transmitting amplification	RGT = 12 kΩ RGT = 27 kΩ		G_T	47 39.8	48	49 41.8	dB
Frequency response	$I_L \geq$ 14 mA, f = 300Hz to 3400Hz		ΔG_T			±0.5	dB
Gain change with current	Pin 30 open (AGA), I_L = 14 mA to 100 mA		ΔG_T			±0.5	dB
Gain deviation	T_{amb} = –10° C to +60° C		ΔG_T			±0.5	dB
CMRR of microphone amplifier			CMRR	60	80		dB
Input resistance of MIC amplifier	RGT = 12 kΩ RGT = 27 kΩ		R_i	 45	50 75	 110	kΩ
Distortion at line	I_L > 14 mA V_L = 700 mV_{rms}		d_t			2	%
Maximum output voltage	I_L > 19 mA, d < 5% V_{mic} = 25 mV CTXA = 1 µF		V_{Lmax}	1.8	3	4.2	dBm

8. Electrical Characteristics (Continued)

f = 1 kHz, 0 dBm = 775 mV_{rms}, I_M = 0.3 mA, I_{MP} = 2 mA, RDC = 130 kΩ, T_{amb} = 25° C, RGSA = 560 kΩ, Z_{ear} = 68 nF + 100Ω, Z_M = 68 nF, Pin 30 open (AGA), V_{MUTX} = GND, see Figure 8-11 on page 22 (AC tests), unless otherwise specified.

Parameters	Test Conditions	Pin	Symbol	Min.	Typ.	Max.	Unit
Noise at line psophometrically weighted	I_L > 14 mA G_T = 48 dB		n_o		–80	–72	dBmp
Anti-clipping attack time release time	CTXA = 1 µF each 3 dB overdrive				0.5 9		ms ms
Gain at low operating current	I_L = 10 mA I_{MP} = 1 mA RDC = 68 kΩ V_{mic} = 1 mV I_M = 300 µA		G_T	40		42.5	dB
Distortion at low operating current	I_L = 10 mA I_M = 300 µA I_{MP} = 1 mA RDC = 68 kΩ V_{mic} = 10 mV		d_t			5	%
Line-loss compensation	I_L = 100 mA, RAGA = 20 kΩ		ΔG_{TI}	–6.4	–5.8	–5.2	dB
Mute suppression a) MIC muted (microphone preamplifier)	I_L ≥ 14 mA Mutx = open		G_{TM}	60	80		dB
Receiving Amplifier, I_L = 14 mA, RGR = 62 kΩ, unless otherwise specified, V_{GEN} = 300 mV							
Adjustment range of receiving gain	I_L ≥ 14 mA, single ended		G_R	–8		+2	dB
Receiving amplification	RGR = 62 kΩ RGR = 22 kΩ		G_R	–7.75	–7 1.5	–6.25	dB
Amplification of DTMF signal from DTMF IN to RECO	I_L ≥ 14 mA V_{MUTX} = V_{MP}		G_{RM}	1	4	7	dB
Frequency response	I_L > 14 mA, f = 300Hz to 3400Hz		ΔG_{RF}			±0.5	dB
Gain change with current	I_L = 14 mA to 100 mA		ΔG_R			±0.5	dB
Gain deviation	T_{amb} = –10° C to +60° C		ΔG_R			±0.5	dB
Ear protection	I_L ≥ 14 mA V_{GEN} = 11V_{rms}		EP			1.1	V_{rms}
MUTE suppression DTMF operation	I_L ≥ 14 mA V_{MUTX} = V_{MP}		ΔG_R	60			dB
Output voltage d ≤2%	I_L = 14 mA Z_{ear} = 68 nF			0.5			V_{rms}
Maximum output current d ≤2%	Z_{ear} = 100Ω			4			mA (peak)
Receiving noise psophometrically weighted	Z_{ear} = 68 nF + 100Ω I_L ≥ 14 mA		n_i		–80	–77	dBmp
Output resistance	Output against GND		R_o			10	Ω
Line-loss compensation	RAGA = 20 kΩ, I_L = 100 mA		ΔG_{RI}	–7.0	–6.0	–5.0	dB
AC impedance			Z_{imp}	840	900	960	Ω

8. Electrical Characteristics (Continued)

f = 1 kHz, 0 dBm = 775 mV_{rms}, I_M = 0.3 mA, I_{MP} = 2 mA, RDC = 130 kΩ, T_{amb} = 25° C, RGSA = 560 kΩ, Z_{ear} = 68 nF + 100Ω, Z_M = 68 nF, Pin 30 open (AGA), V_{MUTX} = GND, see Figure 8-11 on page 22 (AC tests), unless otherwise specified.

Parameters	Test Conditions	Pin	Symbol	Min.	Typ.	Max.	Unit
Gain at low operating current	I_L = 10 mA I_{MP} = 1 mA I_M = 300 µA V_{GEN} = 560 mV RDC = 68 kΩ		G_R	–8	–7	–6	dB
Distortion at low operating current	I_L = 10 mA I_{MP} = 1 mA V_{GEN} = 560 mV RDC = 68 kΩ		d_R			5	%
Speaker Amplifier							
Minimum line current for operation	No AC signal		I_{Lmin}			15	mA
Input resistance		23		14		22	kΩ
Gain from SAI to SAO	V_{SAI} = 3 mV, I_L = 15 mA, RGSA = 560 kΩ RGSA = 20 kΩ		G_{SA}	35.5	36.5 –3	37.5	dB dB
Output power	Load resistance R_L = 50 Ω, d < 5% V_{SAI} = 20 mV I_L = 15 mA I_L = 20 mA		 P_{SA} P_{SA}	3	 7 20		 mW mW
Output noise (input SAI open) psophometrically weighted	I_L > 15 mA		n_{SA}			200	$µV_{psoph}$
Gain deviation	I_L = 15 mA T_{amb} = –10° C to +60° C		ΔG_{SA}			±1	dB
Mute suppression	I_L = 15 mA, V_L = 0 dBm, V_{SAI} = 4 mV Pin 23 open		V_{SAO}			–60	dBm
Gain change with current	I_L = 15 mA to 100 mA		ΔG_{SA}			±1	dB
Resistor for turning off speaker amplifier	I_L = 15 mA to 100 mA		RG_{SA}	0.8	1.3	2	MΩ
Gain change with frequency	I_L = 15 mA f = 300Hz to 3400Hz		ΔG_{SA}			±0.5	dB
Attack time of anti-clipping	20 dB overdrive		t_r		5		ms
Release time of anti-clipping			t_f		80		ms
TMF Amplifier Test Conditions: IMP = 2 mA, IM = 0.3 mA, V_{MUTX} = VMP							
Adjustment range of DTMF gain	I_L = 15 mA Mute active		G_D	40		50	dB
DTMF amplification	I_L = 15 mA, V_{DTMF} = 8 mV Mute active: MUTX = VMP		G_D	40.7	41.7	42.7	dB
Gain deviaton	I_L = 15 mA T_{amb} = –10° C to +60° C		G_D			±0.5	dB

8. Electrical Characteristics (Continued)

f = 1 kHz, 0 dBm = 775 mV_{rms}, I_M = 0.3 mA, I_{MP} = 2 mA, RDC = 130 kΩ, T_{amb} = 25° C, RGSA = 560 kΩ, Z_{ear} = 68 nF + 100Ω, Z_M = 68 nF, Pin 30 open (AGA), V_{MUTX} = GND, see Figure 8-11 on page 22 (AC tests), unless otherwise specified.

Parameters	Test Conditions	Pin	Symbol	Min.	Typ.	Max.	Unit
Input resistance	RGT = 27 kΩ RGT = 15 kΩ		R_i	60 26	180 70	300 130	kΩ
Distortion of DTMF signal	$I_L \geq 15$ mA V_L = 0 dBm		d_D			2	%
Gain deviation with current	I_L = 15 mA to 100 mA		ΔGD			±0.5	dB
AFS Acousting Feedback Suppression							
Range of attenuation	$I_L \geq 15$ mA			0		50	dB
Attenuation of transmit gain	$I_L \geq 15$ mA, I_{INLDT} = 0 µA R_{ATAFS} = 30 kΩ I_{INLDR} = 10 µA		ΔG_T		45		dB
Attenuation of speaker amplifier	$I_L \geq 15$ mA I_{INLDP} = 0 µA R_{ATAFS} = 30 kΩ I_{INLDR} = 10 µA		ΔG_{SA}		50		dB
AFS disable	$I_L \geq 15$ mA		V_{ATAFS}	1.5			V
Supply Voltages, V_{mic} = 25 mV, T_{amb} = –10° C to +60° C							
V_{MP}	I_L = 14 mA, RDC = 68 kΩ I_{MP} = 2 mA		V_{MP}	3.1	3.3	3.5	V
V_M	$I_L \geq 14$ mA, I_M = 300 µA RDC = 130 kΩ		V_M	1.4		3.3	V
V_B	I_B = +20 mA, I_L = 0 mA		V_B		7	7.6	V
MUTX Input (see Figure 8-9 on page 20)							
Input current	$V_{MUTX} = V_{MP}$ V_{MUTX} = GND		I_{MUTX} I_{MUTX}		+20 –20	+30 –30	µA µA
Input voltage	Input high		V_{MUTX}	V_{MP} – 0.3V			V
	Input low		V_{MUTX}			0.3	V

Table 8-1. U4089B-P Control

	MUTX	MODE
0	MIC1, MIC2 transmit enabled receive enable AFS = on AGA = on TXACL = on	Speech
Z	DTMF transmit enabled receive enable AFS = on AGA = on TXACL = on	For answering machine
1	DTMF transmit enabled DTMF to receive enable AFS = off AGA = off TXACL = off	DTMF dialling

	IMPSEL	MODE
0	Line impedance = 600Ω TXA = on ES = off	Speech
0 to Z	Line impedance = 600Ω TXA = off ES = on	Transmit mute
1 to Z	Line impedance = 900Ω TXA = off ES = on	Transmit mute
1	Line impedance = 900Ω TXA = on ES = off	Speech

Logic level
0 = < (0.3V) Z = > (1V) < (V_{MP} – 1V) or (open input) 1 = > (V_{MP} – 0.3V)

AFS = Acoustical feedback-suppression control
AGA = Automatic gain adjustment
TXACL = Transmit anti-clipping control
ES = External supply

Figure 8-1. Typical DC Characteristic

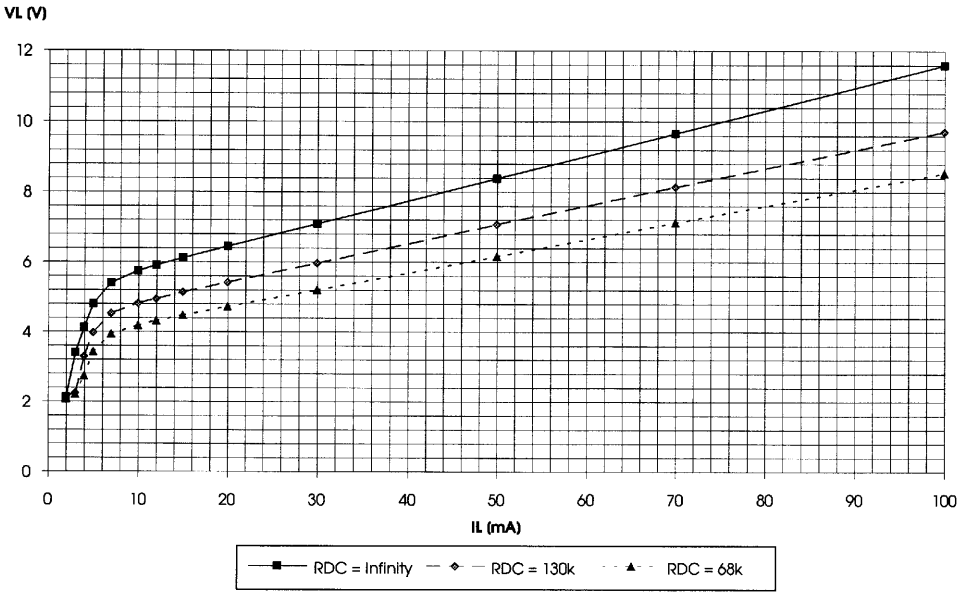

Figure 8-2. Typical Adjustment Range of the Transmit Gain

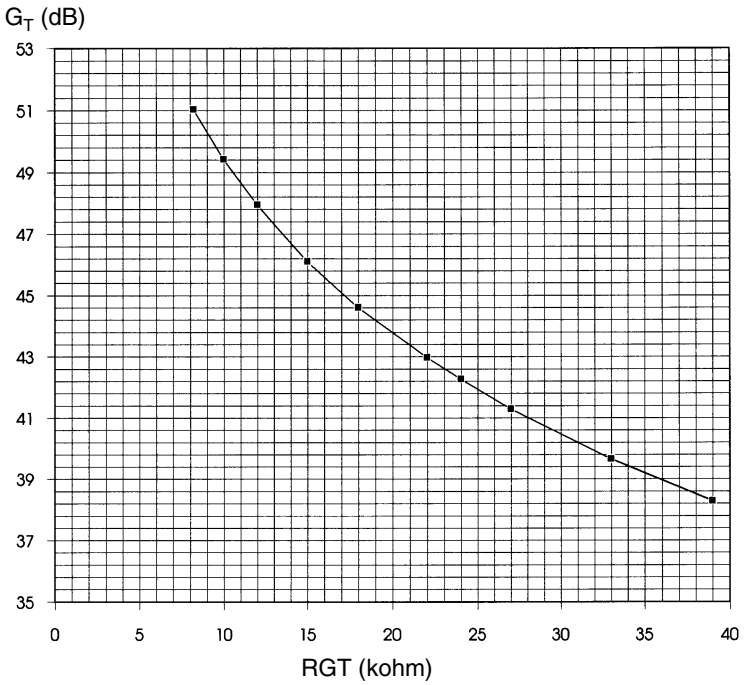

Figure 8-3. Typical Adjustment Range of the Receive Gain

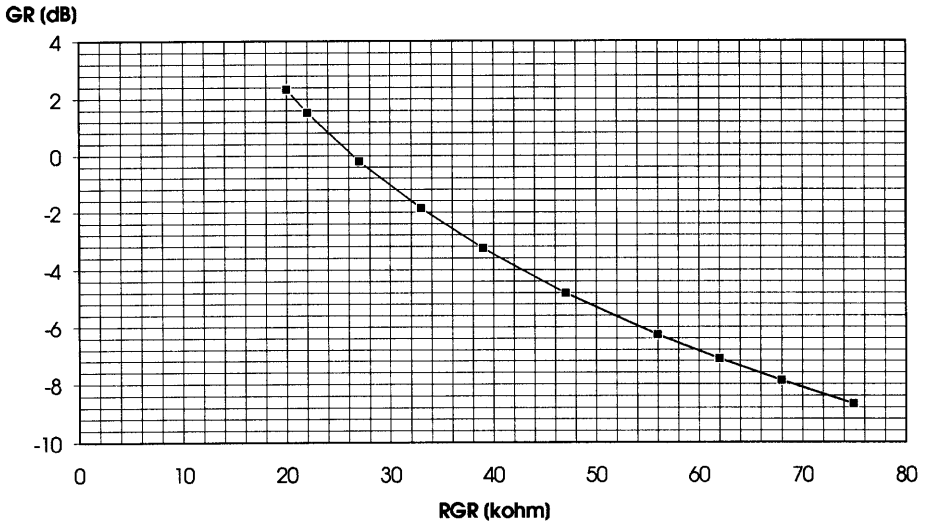

Figure 8-4. Typical AGA Characteristic

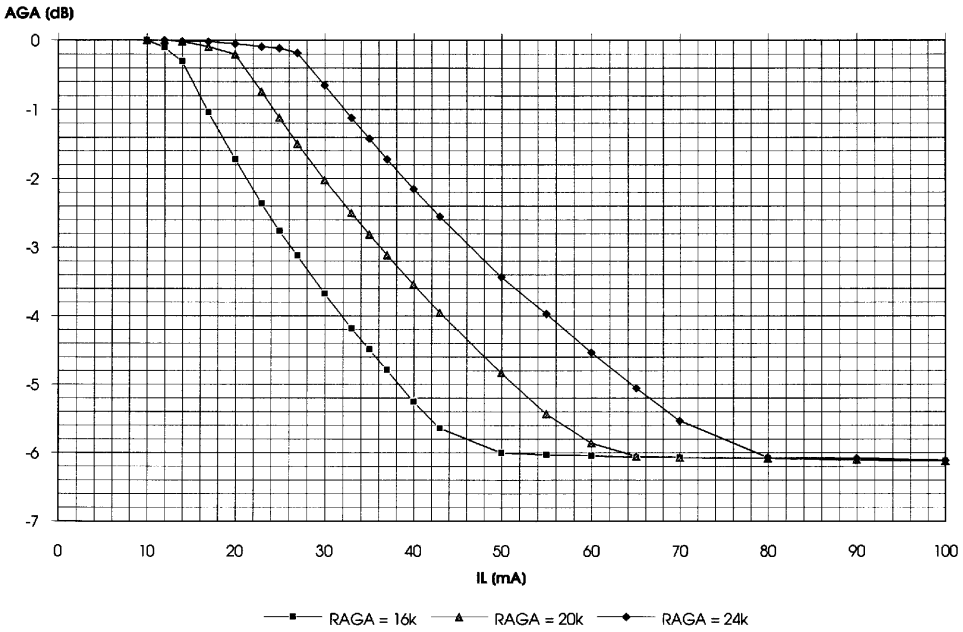

Figure 8-5. Typical Load Characteristic of V_B for a Maximum (RDC = infinity) DC Characteristic and a 3-mW Loudspeaker Output

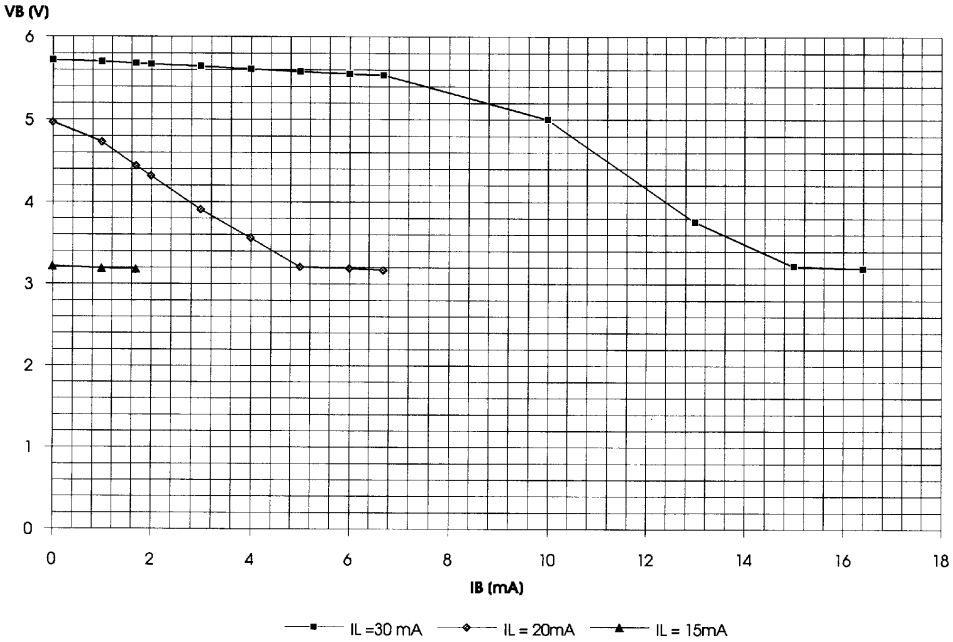

RDC = Infinity; VI =200mV/1kHz; PSAO = 3mW; IMP = 2mA; IM = 300µA; RGSA =560k

Figure 8-6. Typical Load Characteristic of V_B for a Medium DC Characteristic (RDC = 130 kΩ) and a 3-mW Loudspeaker Output

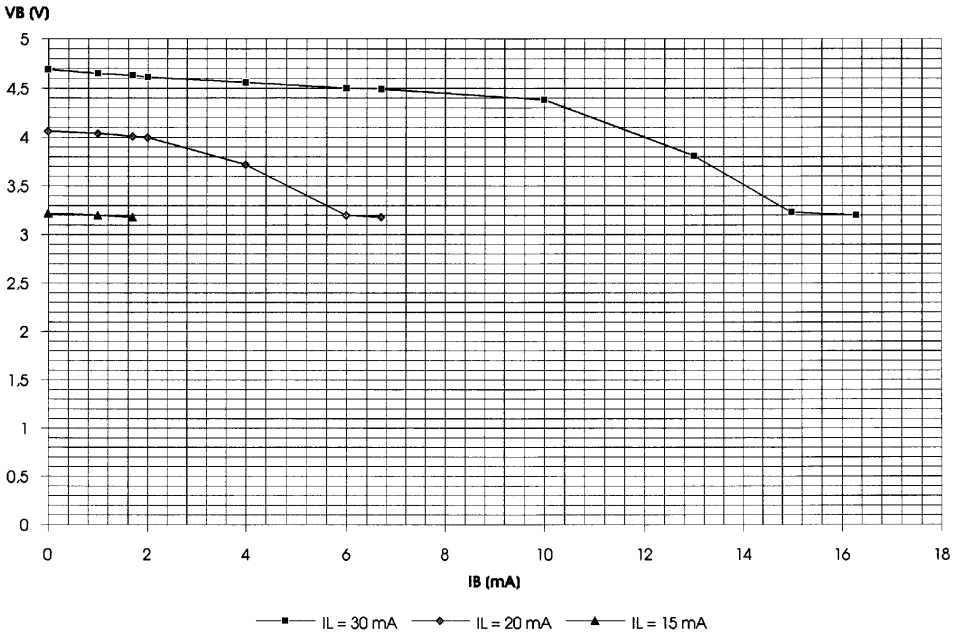

RDC = 130k; VI = 200mV/1kHz; PSAO = 3mW; IMP = 2mA; IM =300µA; RGSA = 560k

Figure 8-7. Typical Load Characteristic of V_B for a Minimum DC Characteristic (RDC = 68 kΩ) and a 3-mW Loudspeaker Output

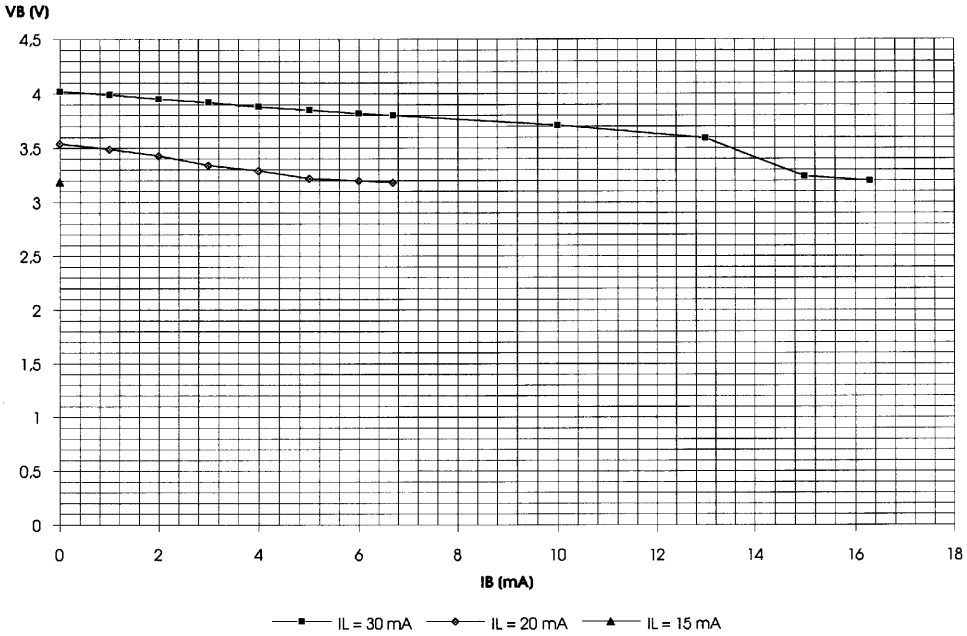

RDC = 68k; VI = 200mV/1kHz; PSAO = 3mW; IMP = 2mA; IM = 300µA; RGSA = 560k

Figure 8-8. DC Voltage Absolute

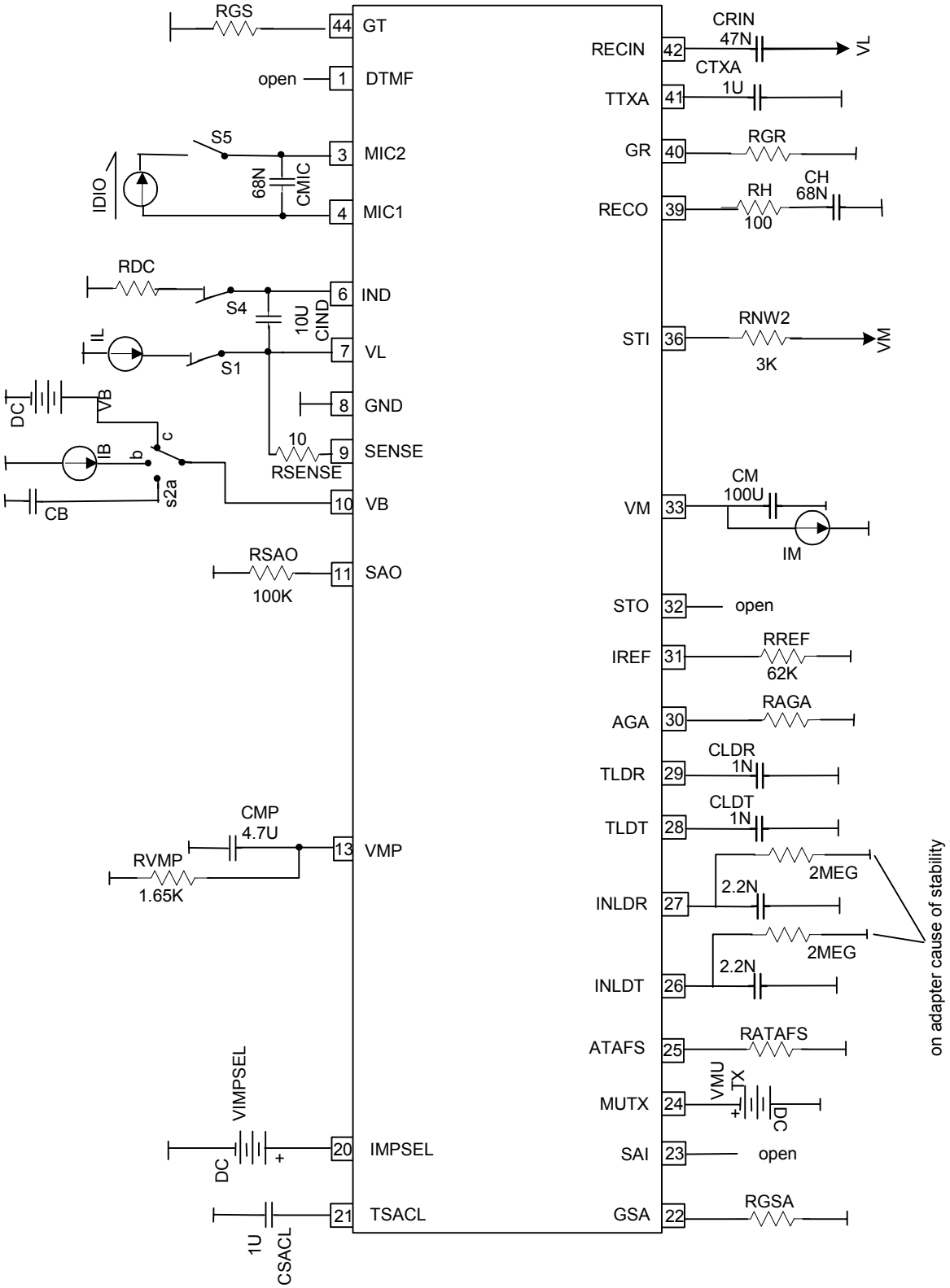

Figure 8-9. DC Voltage Current Test

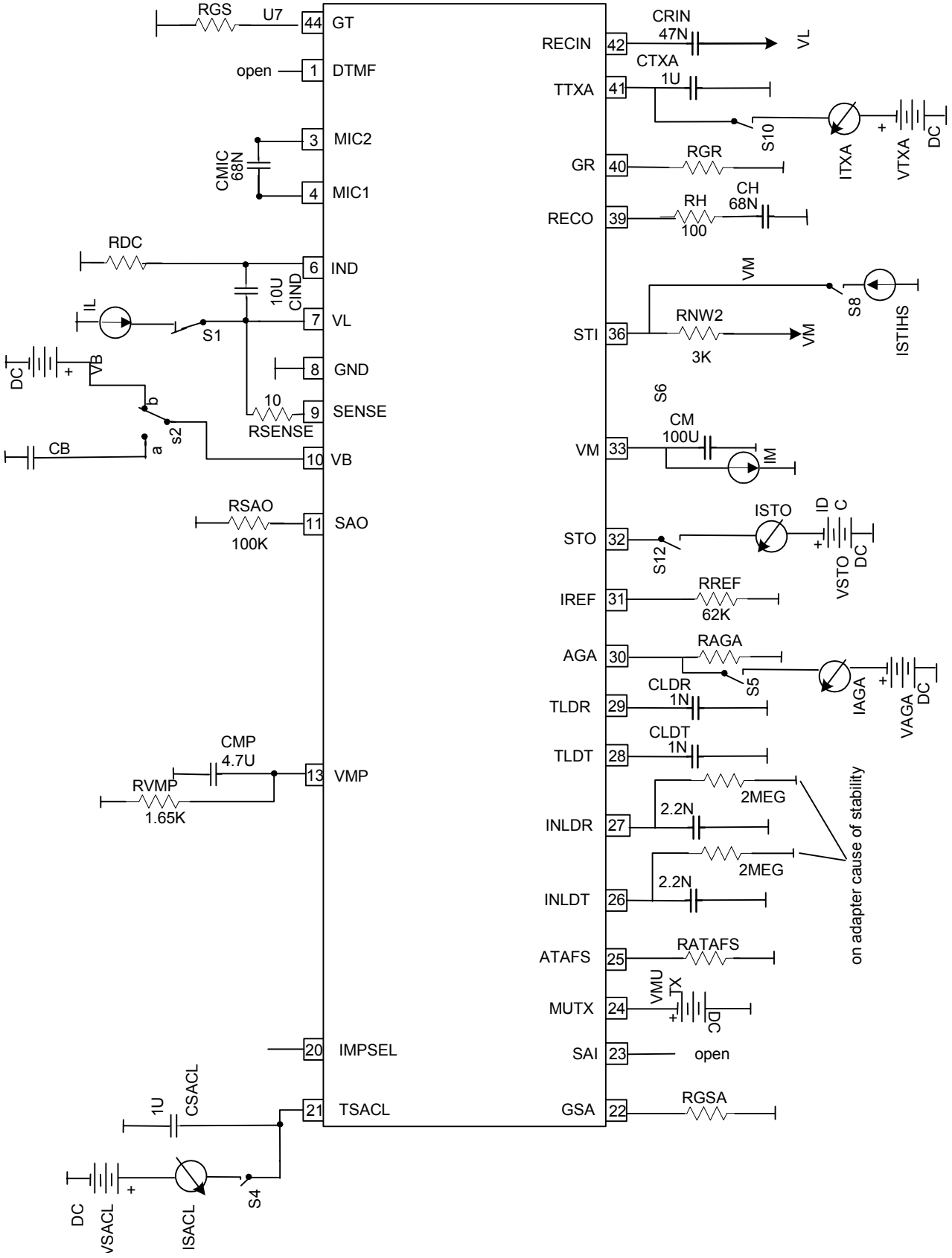

Figure 8-10. DC Ramps

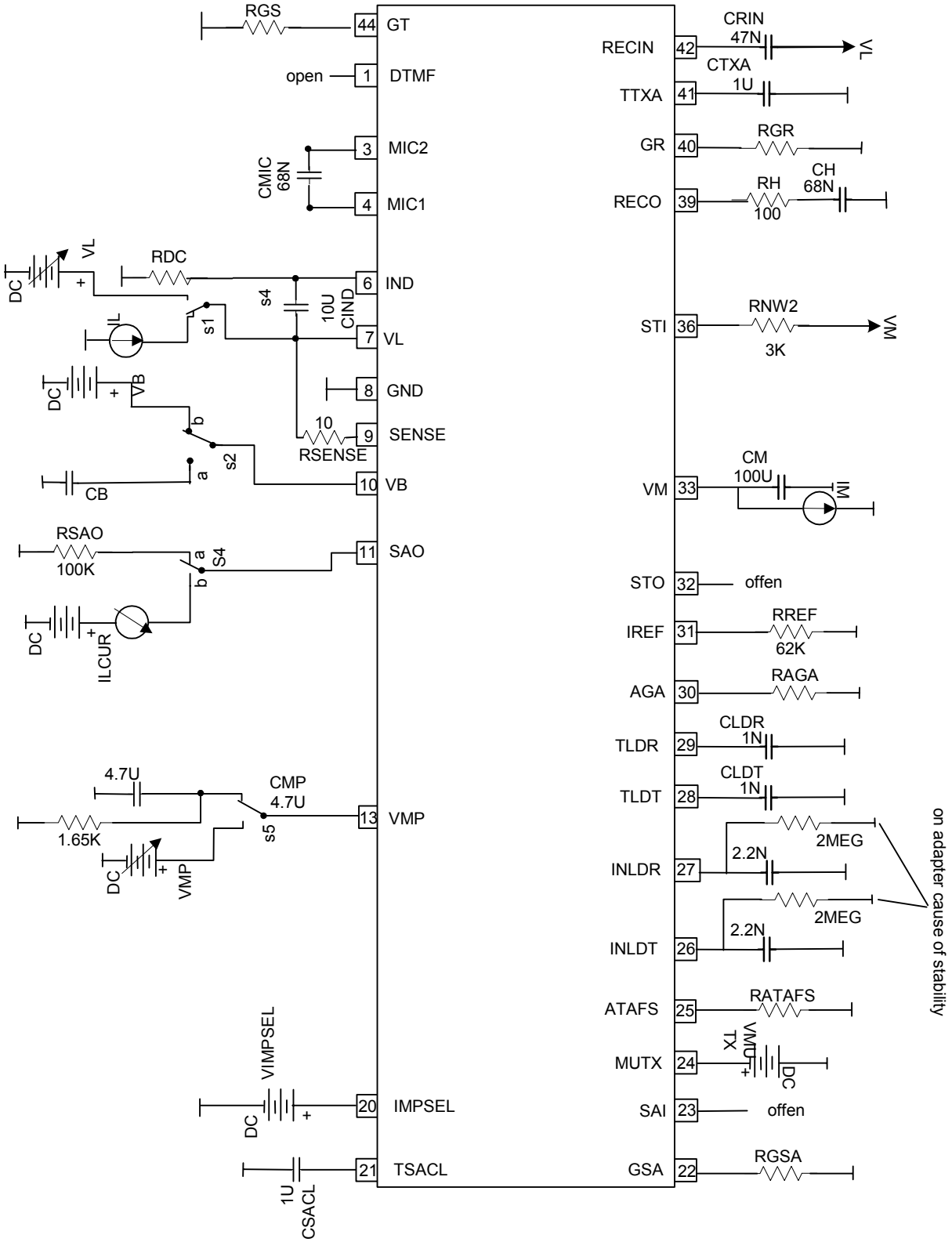

Figure 8-11. AC Tests

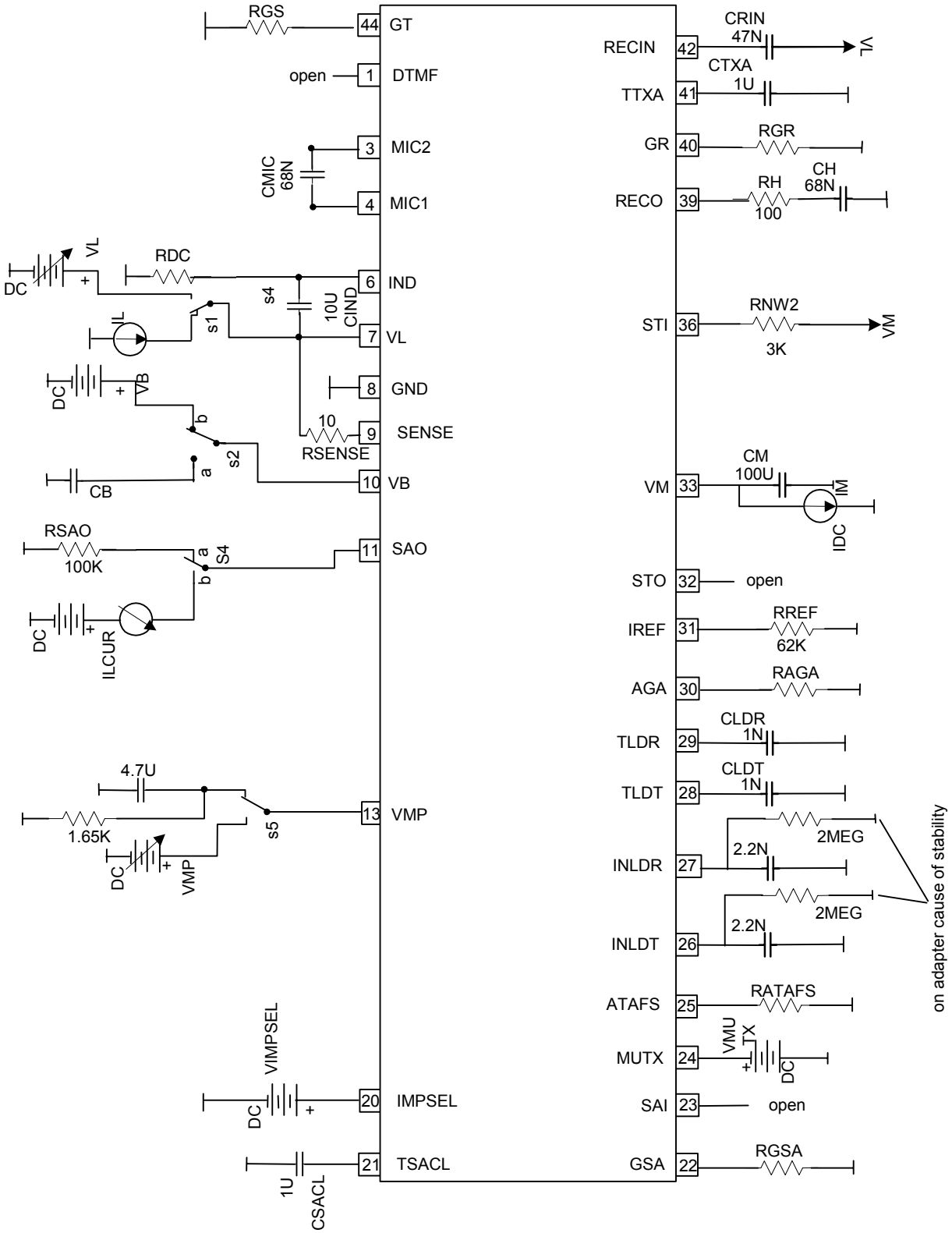

Table 8-2. Typical Values of External Components (see Figure 8-12 on page 24)

Name	Value	Name	Value	Name	Value	Name	Value
C_2	4.7 nF	C_{16}	47 µF	R_3	>68 kΩ	R_{16}	1 kΩ
C_3	10 µF	C_{17}	10 µF	R_4	10 kΩ	R_{17}	1.2 kΩ
C_4	220 µF	C_{18}	10 µF	R_6	62 kΩ	R_{18}	30 kΩ
C_5	47 µF	C_{21}	1 µF	R_8	22 kΩ	R_{21}	15 kΩ
C_7	1 µF	C_{23}	6.8 nF	R_9	330 kΩ	R_{22}	330 kΩ
C_8	100 µF	C_{24}	10 nF	R_{10}	3 kΩ	R_{23}	220 kΩ
C_{10}	150 nF	C_{25}	100 nF	R_{11}	62 kΩ	R_{24}	68 kΩ
C_{11}	68 nF	C_{26}	470 nF	R_{12}	30 kΩ	R_{25}	2 kΩ
C_{12}	33 nF	C_{27}	33 nF	R_{13}	62 kΩ	R_{26}	3.3 kΩ
C_{14}	100 nF	C_{28}	10 µF	R_{14}	120 kΩ	R_{29}	1 kΩ
C_{15}	1 µF	R_2	20 kΩ	R_{15}	47 kΩ	R_{30}	12 kΩ

Figure 8-12. Application for Hands-free Operation

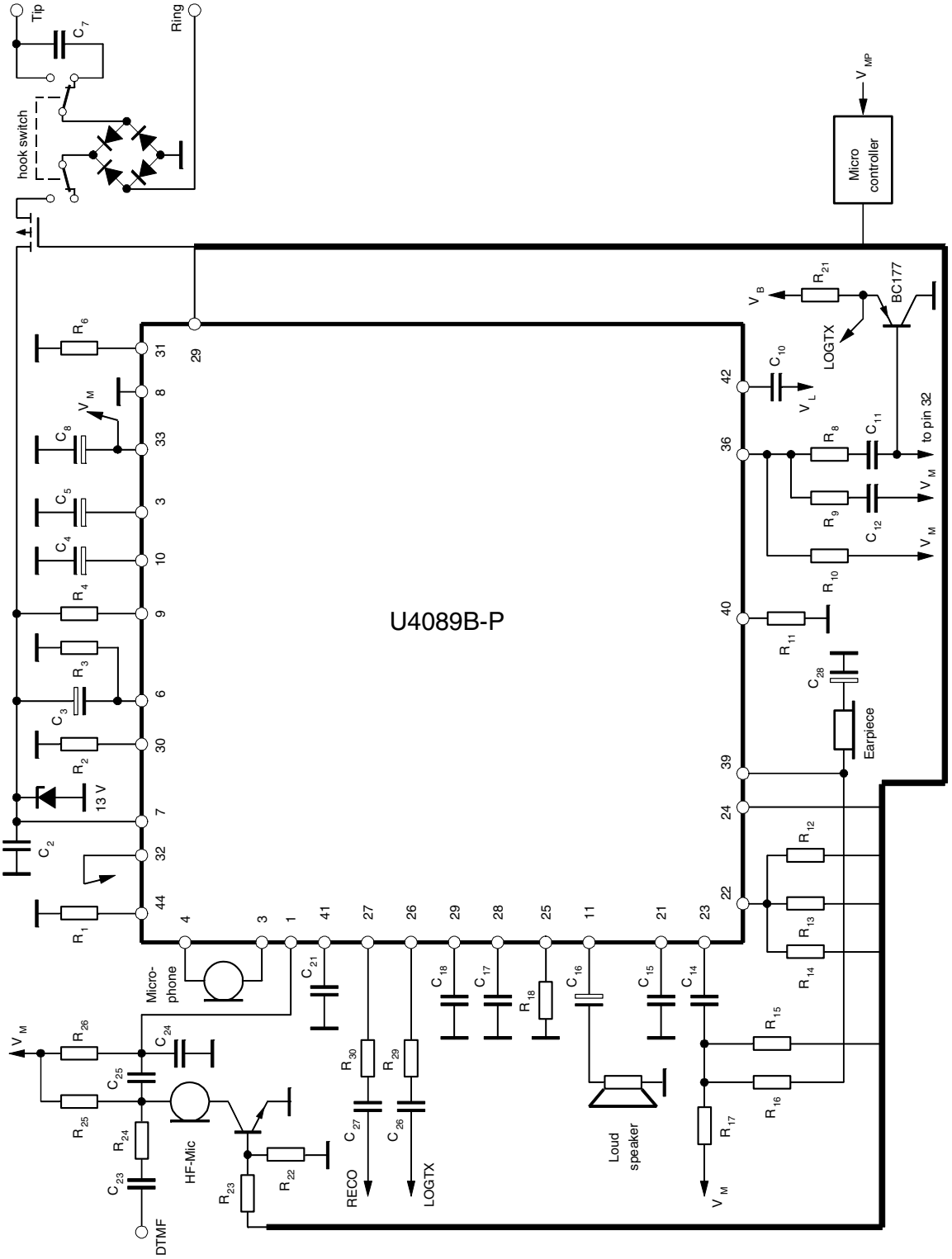

9. Ordering Information

Extended Type Number	Package	Remarks
U4089B-PFNY	SSO44	Tubes, Pb-free
U4089B-PFNG3Y	SSO44	Taped and reeled, Pb-free

10. Package Information

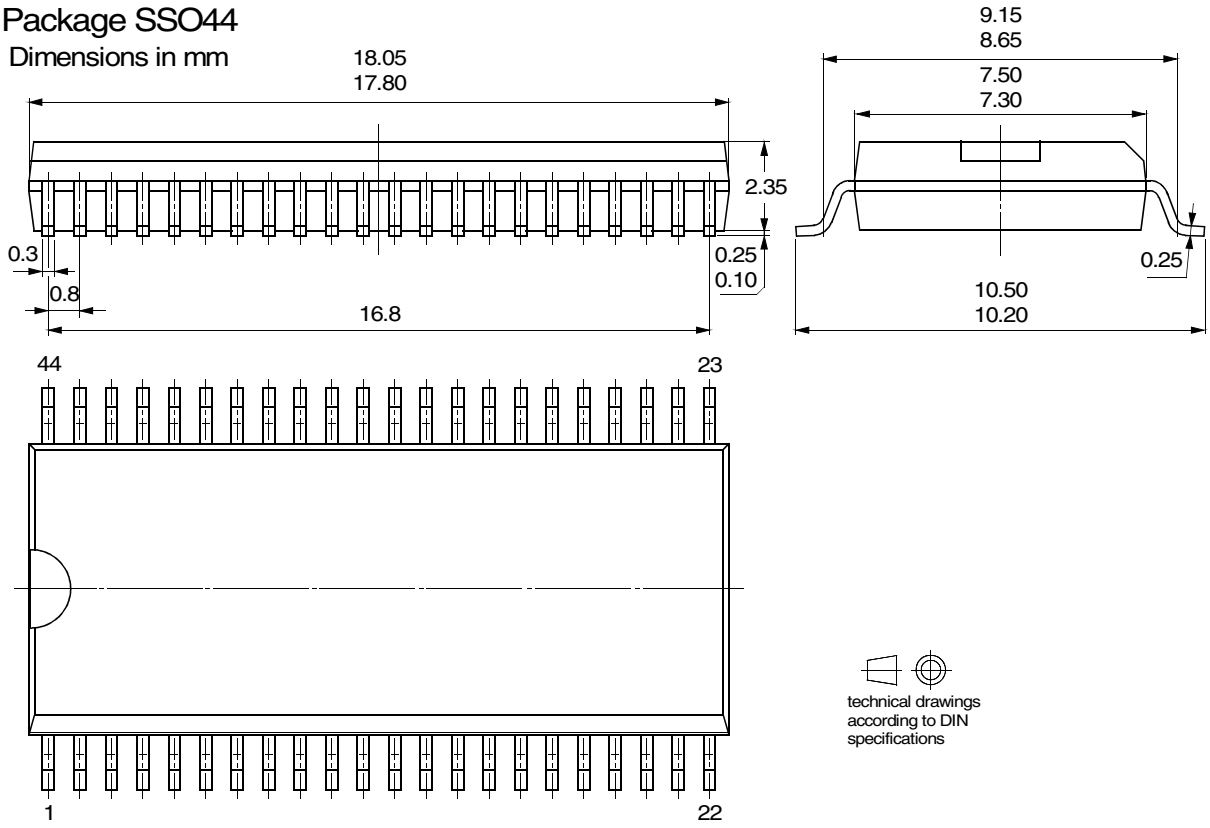

Atmel Corporation

2325 Orchard Parkway
San Jose, CA 95131, USA
Tel: 1(408) 441-0311
Fax: 1(408) 487-2600

Regional Headquarters

Europe
Atmel Sarl
Route des Arsenaux 41
Case Postale 80
CH-1705 Fribourg
Switzerland
Tel: (41) 26-426-5555
Fax: (41) 26-426-5500

Asia
Room 1219
Chinachem Golden Plaza
77 Mody Road Tsimshatsui
East Kowloon
Hong Kong
Tel: (852) 2721-9778
Fax: (852) 2722-1369

Japan
9F, Tonetsu Shinkawa Bldg.
1-24-8 Shinkawa
Chuo-ku, Tokyo 104-0033
Japan
Tel: (81) 3-3523-3551
Fax: (81) 3-3523-7581

Atmel Operations

Memory
2325 Orchard Parkway
San Jose, CA 95131, USA
Tel: 1(408) 441-0311
Fax: 1(408) 436-4314

Microcontrollers
2325 Orchard Parkway
San Jose, CA 95131, USA
Tel: 1(408) 441-0311
Fax: 1(408) 436-4314

La Chantrerie
BP 70602
44306 Nantes Cedex 3, France
Tel: (33) 2-40-18-18-18
Fax: (33) 2-40-18-19-60

ASIC/ASSP/Smart Cards
Zone Industrielle
13106 Rousset Cedex, France
Tel: (33) 4-42-53-60-00
Fax: (33) 4-42-53-60-01

1150 East Cheyenne Mtn. Blvd.
Colorado Springs, CO 80906, USA
Tel: 1(719) 576-3300
Fax: 1(719) 540-1759

Scottish Enterprise Technology Park
Maxwell Building
East Kilbride G75 0QR, Scotland
Tel: (44) 1355-803-000
Fax: (44) 1355-242-743

RF/Automotive
Theresienstrasse 2
Postfach 3535
74025 Heilbronn, Germany
Tel: (49) 71-31-67-0
Fax: (49) 71-31-67-2340

1150 East Cheyenne Mtn. Blvd.
Colorado Springs, CO 80906, USA
Tel: 1(719) 576-3300
Fax: 1(719) 540-1759

Biometrics/Imaging/Hi-Rel MPU/
High Speed Converters/RF Datacom
Avenue de Rochepleine
BP 123
38521 Saint-Egreve Cedex, France
Tel: (33) 4-76-58-30-00
Fax: (33) 4-76-58-34-80

Literature Requests
www.atmel.com/literature

Disclaimer: The information in this document is provided in connection with Atmel products. No license, express or implied, by estoppel or otherwise, to any intellectual property right is granted by this document or in connection with the sale of Atmel products. **EXCEPT AS SET FORTH IN ATMEL'S TERMS AND CONDITIONS OF SALE LOCATED ON ATMEL'S WEB SITE, ATMEL ASSUMES NO LIABILITY WHATSOEVER AND DISCLAIMS ANY EXPRESS, IMPLIED OR STATUTORY WARRANTY RELATING TO ITS PRODUCTS INCLUDING, BUT NOT LIMITED TO, THE IMPLIED WARRANTY OF MERCHANTABILITY, FITNESS FOR A PARTICULAR PURPOSE, OR NON-INFRINGEMENT. IN NO EVENT SHALL ATMEL BE LIABLE FOR ANY DIRECT, INDIRECT, CONSEQUENTIAL, PUNITIVE, SPECIAL OR INCIDENTAL DAMAGES (INCLUDING, WITHOUT LIMITATION, DAMAGES FOR LOSS OF PROFITS, BUSINESS INTERRUPTION, OR LOSS OF INFORMATION) ARISING OUT OF THE USE OR INABILITY TO USE THIS DOCUMENT, EVEN IF ATMEL HAS BEEN ADVISED OF THE POSSIBILITY OF SUCH DAMAGES.** Atmel makes no representations or warranties with respect to the accuracy or completeness of the contents of this document and reserves the right to make changes to specifications and product descriptions at any time without notice. Atmel does not make any commitment to update the information contained herein. Unless specifically provided otherwise, Atmel products are not suitable for, and shall not be used in, automotive applications. Atmel's products are not intended, authorized, or warranted for use as components in applications intended to support or sustain life.

© Atmel Corporation 2005. **All rights reserved.** Atmel®, logo and combinations thereof, Everywhere You Are® and others, are registered trademarks or trademarks of Atmel Corporation or its subsidiaries. Other terms and product names may be trademarks of others.

Printed on recycled paper.

4518C–CORD–10/05