RGB Video Amplifier System for Monitors

Description

The U2203B-A is a wideband video amplifier IC system especially designed for use in high-resolution RGB monitors. The IC includes three well matched video amplifiers, three gated differential amplifiers for black-level clamping and brightness control and the function for simultaneously contrast control. Separate adjustment of the maximum gain of each channel is also possible.

Features

- 3 channels, high bandwidth (90 MHz @ –3 dB)
- Matched attenuators for contrast control
- Black-level clamping for brightness control
- Independent gain control of each amplifier
- ESD protection according to MIL-STD. 883

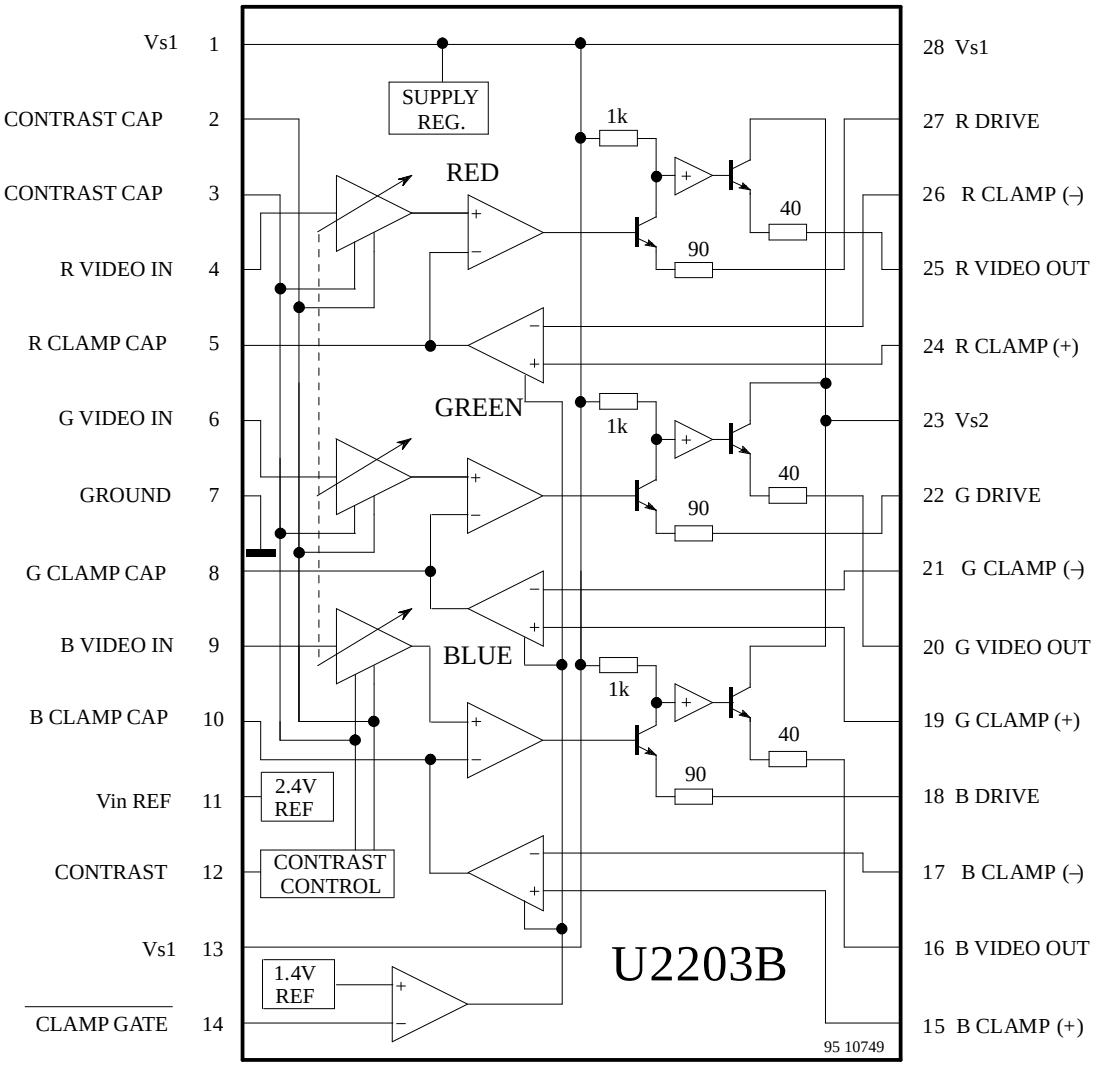

Figure 1. Block diagram

Pin Description

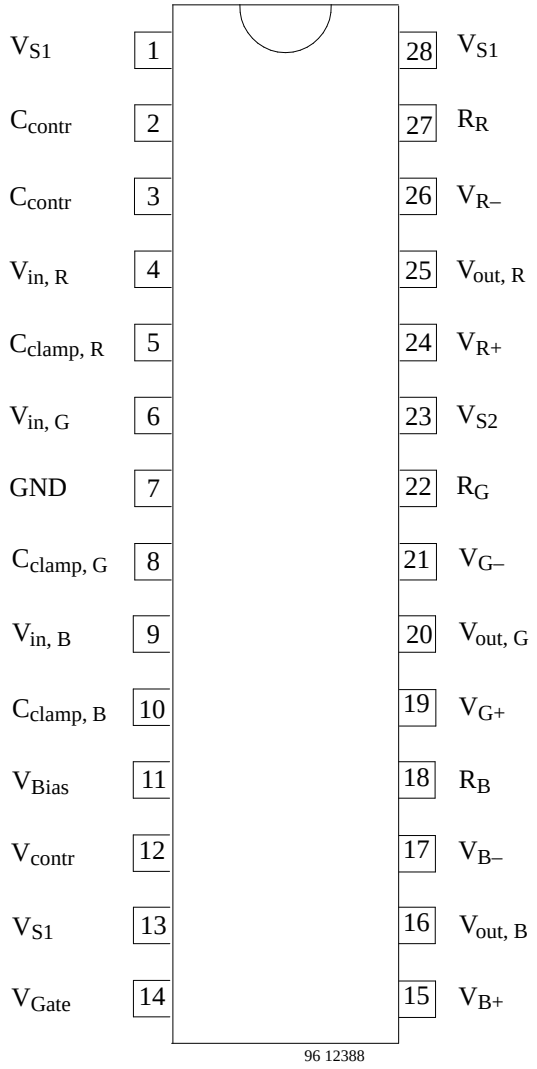

Figure 2. Pinning

Pin	Symbol	Function
1	V_{S1}	Supply voltage
2	C_{contr}	Contrast cap.
3	C_{contr}	Contrast cap.
4	$V_{in, R}$	Video input (R)
5	$C_{clamp, R}$	Clamp cap. (R)
6	$V_{in, G}$	Video input (G)
7	GND	Ground
8	$C_{clamp, G}$	Clamp cap. (G)
9	$V_{in, G}$	Video input (B)
10	$C_{clamp, B}$	Clamp cap. (B)
11	V_{Bias}	Bias voltage (RGB-inputs)
12	V_{contr}	Contrast control
13	V_{S1}	Supply voltage
14	V_{Gate}	Inverted clamp gate
15	V_{B+}	Clamp amplifier (B+)
16	$V_{in, B}$	Video output (B)
17	$V_{B–}$	Clamp amplifier (B–)
18	R_B	Drive resistor (B)
19	V_{G+}	Clamp amplifier (G+)
20	$V_{out, G}$	Video output (G)
21	$V_{G–}$	Clamp amplifier (G–)
22	R_G	Drive resistor (G)
23	V_{S2}	Supply voltage (outputs)
24	V_{R+}	Clamp amplifier (R+)
25	$V_{out, R}$	Video output (R)
26	$V_{R–}$	Clamp amplifier (R–)
27	R_R	Drive resistor (R)
28	V_{S1}	Supply voltage

Absolute Maximum Ratings

Parameters		Symbol	Value	Unit
Supply voltage	Pins 1, 13, 28 and 23	V_S	13.5	V
Input voltage at all other pins		V_{in}	0 toV_S	V
Video output current	Pins 16, 20 and 25	I_V	28	mA
Junction temperature		T_j	125	°C
Storage temperature range		T_{stg}	–40 to 125	°C

Operating Range

Parameters		Symbol	Value	Unit
Ambient temperature range		T_{amb}	0 to 80	°C
Supply voltage range	Pins 1, 13, 23 and 28	V_{S2}, V_{S1}	11.0 to 13.0	V

Thermal Resistance

Parameters		Symbol	Value	Unit
Junction ambient	(DIP28)	R_{thJA}	46	K/W

Electrical Characteristics

Test conditions unless otherwise specified, reference point Pin 7, T_{amb} = 25°C,
$V_{S1} = V_{S2}$ = 12 V, V_{12} = 6 V (contrast); V_{14} = 0 V (inv. gating); $V_{15} = V_{19} = V_{24}$ = 2 V (brightness)

Parameters	Test Conditions / Pins	Symbol	Min.	Typ.	Max.	Unit
DC-values						
Supply current	V_{S1} only, Pins 1, 13 and 28	I_{S1}		60	70	mA
Input bias voltage	Pin 11	V_{inREF}	2.3		2.5	V
Input bias current	Pins 4, 6 and 9	I_{inREF}	1	5	10	µA
Switching voltage gating "on"	Pin 14	VG "L"	0.8	1.3		V
Switching voltage gating "off"	Pin 14	VG "H"		1.5	2.0	V
Switching current gating "on"	V_{14} = 0.8 V Pin 14	IG "L"	–1	–0.01		µA
Switching current gating "off"	V_{14} = 2.0 V Pin 14	IG "H"		5	8	µA
Charge current clamping capacitor	$V_{5,8,10}$ = 0 V Pins 5, 8 and 10	ICL+	0.8	1.0	1.2	mA
Discharge current clamping capacitor	$V_{5,8,10}$ = 5 V Pins 5, 8 and 10	ICL–	–1.2	–1.0	–0.8	mA
Video outputs, V_O	**Pins 16, 20 and 25**					
Low level	$V_{5,8,10}$ = 0 V	$V_{O"L"}$		0.8	1.0	V
High level	$V_{5,8,10} = V_S$	$V_{O"H"}$	8.0	8.6		V
Output offset between two amplifiers	V_{15}, V_{19}, V_{24} = 2 V	ΔV_O (2 V)			±50	mV
	V_{15}, V_{19}, V_{24} = 4 V	ΔV_O (4 V)			±50	mV
Video gain	$V_{15} = V_{19} = V_{24}$ = 4 V (brightness); f_{IN} = 1 MHz					
Maximum video gain	V_{12} = 12 V	G_{Vmax}	16.0	17.7		dB
Middle video gain	V_{12} = 5 V	GV_{mid}		8.5		dB
Dynamic gain range		GVD		50		dB
Video gain match (any 2 outputs)	V_{12} = 12 V V_{12} = 5 V V_{12} = 2.2 V 1)	GVM_{max} GVM_{mid} GVM_{-30}		±0.1 ±0.1 ±0.3		dB dB dB
Video bandwidth						
unpeaked (C = 0 pF) optimal peaking (C = 27 pF)	V_{12} = 12 V (f_{-3dB}) V_{12} = 12 V (f_{-3dB})	BWV BWV_P		65 90		MHz MHz
Video cross talk	f_{IN} = 10 kHz f_{IN} = 10 MHz	CT_{10kHz} CT_{10MHz}	–50	 –47		dB dB

1) Measured 30 dB below maximum gain

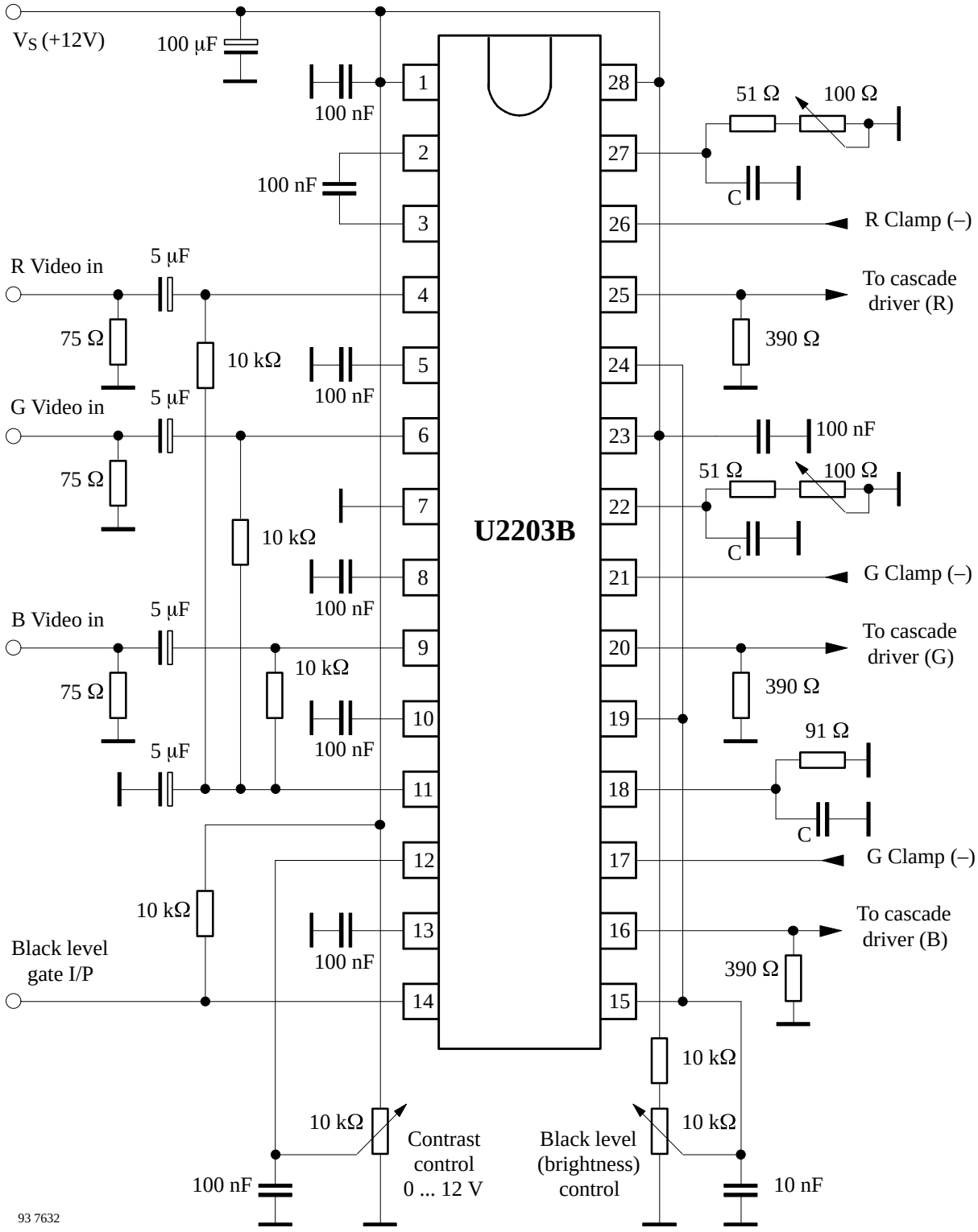

Figure 3. Typical application circuit

AC Characteristics

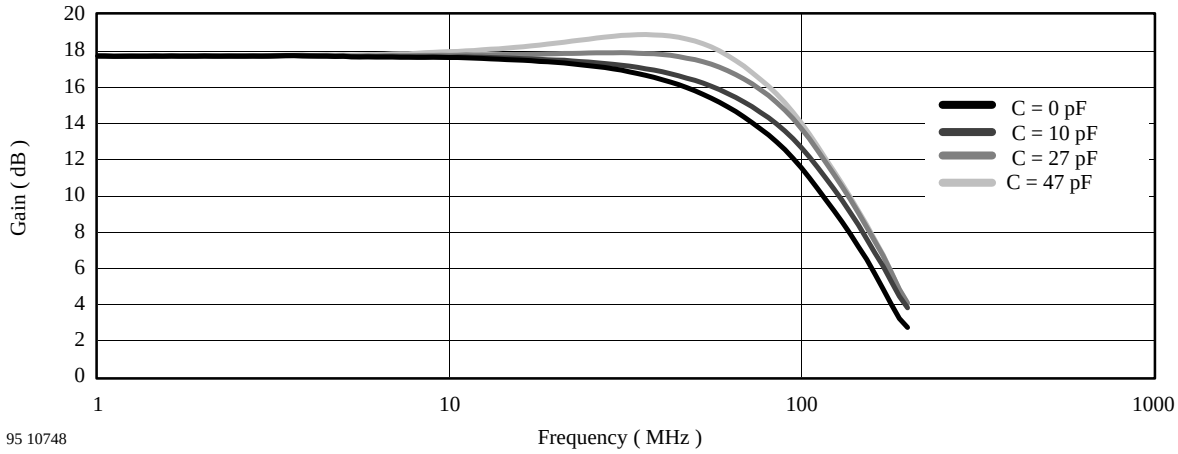

Figure 4. Gain vs. frequency (various peaking), V_{12} = 12 V (contrast), $V_{15} = V_{19} = V_{24}$ = 4 V (brightness)

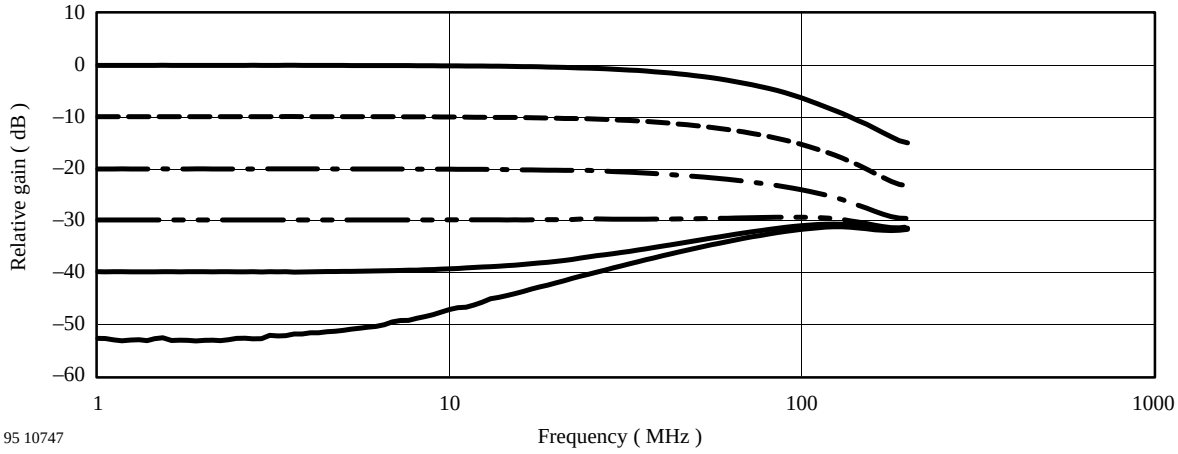

Figure 5. Relative gain vs. frequency (no peaking), V_{12} = variable (contrast), $V_{15} = V_{19} = V_{24}$ = 4 V (brightness), 0 dBrel = 17.7 dB, C = 0 pF

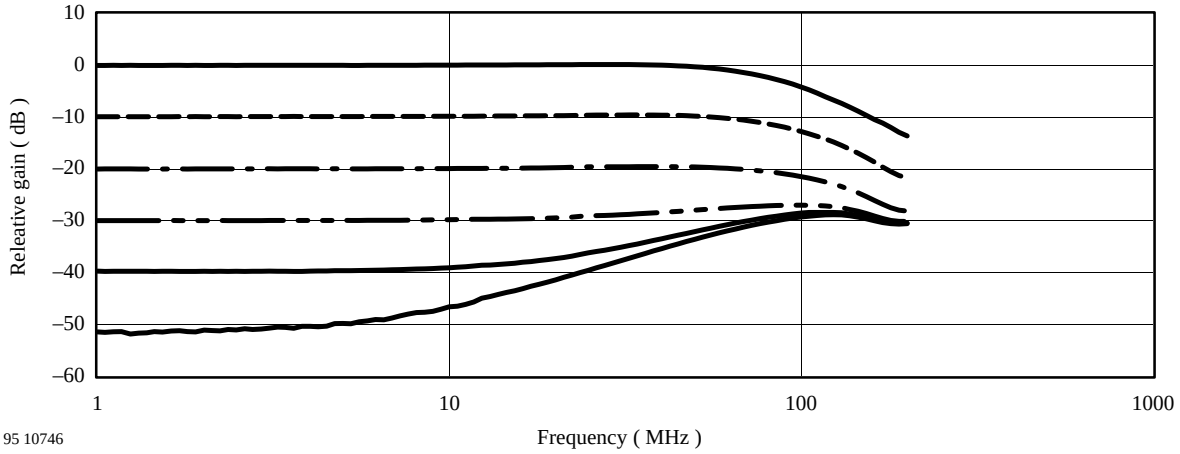

Figure 6. Rel. gain vs. frequency (optimized peaking), V_{12} = variable (contrast), $V_{15} = V_{19} = V_{24}$ = 4 V (brightness), 0 dBrel = 17.7 dB, C = 27 pF

Package Information

Package DIP28
Dimensions in mm

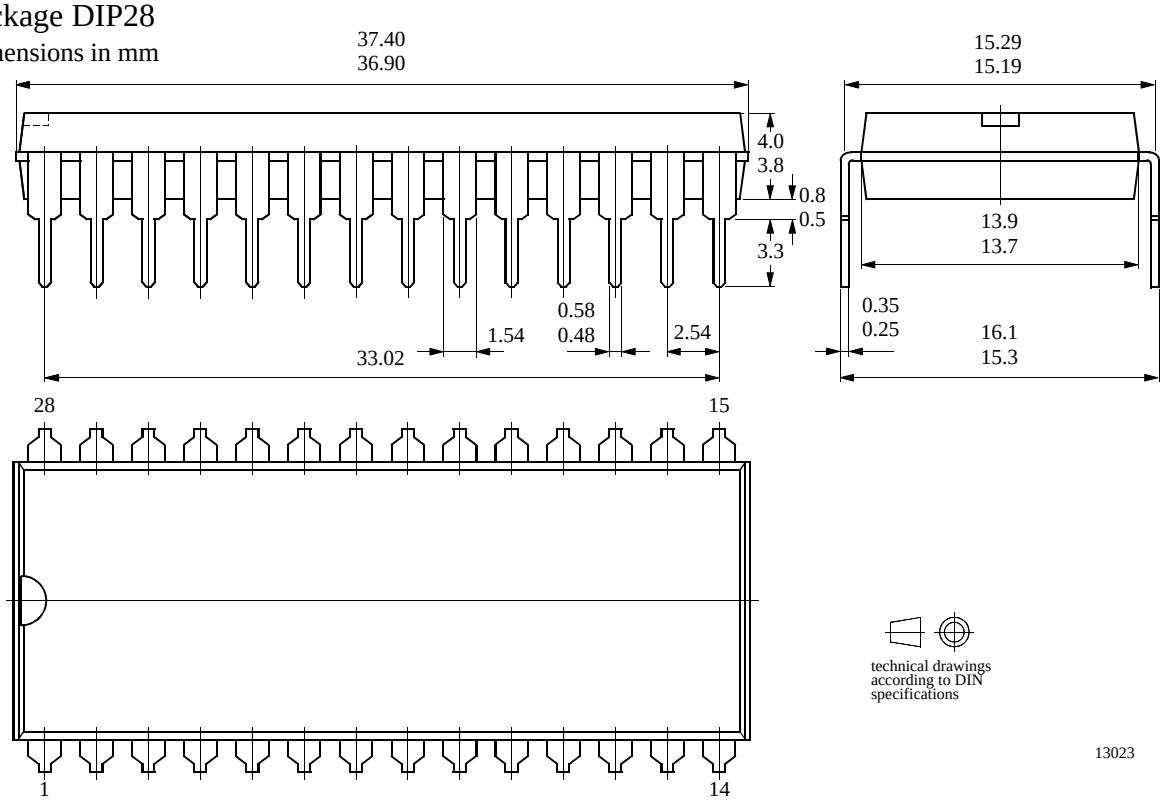

Ozone Depleting Substances Policy Statement

It is the policy of **TEMIC TELEFUNKEN microelectronic GmbH** to

1. Meet all present and future national and international statutory requirements.

2. Regularly and continuously improve the performance of our products, processes, distribution and operating systems with respect to their impact on the health and safety of our employees and the public, as well as their impact on the environment.

It is particular concern to control or eliminate releases of those substances into the atmosphere which are known as ozone depleting substances (ODSs).

The Montreal Protocol (1987) and its London Amendments (1990) intend to severely restrict the use of ODSs and forbid their use within the next ten years. Various national and international initiatives are pressing for an earlier ban on these substances.

TEMIC TELEFUNKEN microelectronic GmbH semiconductor division has been able to use its policy of continuous improvements to eliminate the use of ODSs listed in the following documents.

1. Annex A, B and list of transitional substances of the Montreal Protocol and the London Amendments respectively

2. Class I and II ozone depleting substances in the Clean Air Act Amendments of 1990 by the Environmental Protection Agency (EPA) in the USA

3. Council Decision 88/540/EEC and 91/690/EEC Annex A, B and C (transitional substances) respectively.

TEMIC can certify that our semiconductors are not manufactured with ozone depleting substances and do not contain such substances.

We reserve the right to make changes to improve technical design and may do so without further notice.
Parameters can vary in different applications. All operating parameters must be validated for each customer application by the customer. Should the buyer use TEMIC products for any unintended or unauthorized application, the buyer shall indemnify TEMIC against all claims, costs, damages, and expenses, arising out of, directly or indirectly, any claim of personal damage, injury or death associated with such unintended or unauthorized use.

TEMIC TELEFUNKEN microelectronic GmbH, P.O.B. 3535, D-74025 Heilbronn, Germany
Telephone: 49 (0)7131 67 2831, Fax number: 49 (0)7131 67 2423