Features

- **Integrated Reverse Phase Control**
- **Mode Selection:**
  - **Zero-voltage Switch with Static Output**
  - **Two-stage Reverse Phase Control with Switch-off**
  - **Two-stage Reverse Phase Control with Dimming Function**
- **Current Monitoring:**
  - **High-speed Short-circuit Monitoring with Output**
  - **High-current Monitoring with Integrating Buffer**
- **Integrated Chip Temperature Monitoring**
- **Adjustable and Retriggerable Tracking Time**
- **External Window Adjustment for Sensor Input**
- **Enable Input for Triggering**

Pb Lead Free

Applications

- **Two- or Three-wire Applications**
- **Motion Detectors**
- **Time-delay Relays**
- **Dimmers**
- **Reverse Phase Controls**
- **Timers**

1. Description

The timer control circuit U2102B is based on bipolar technology. The output stage can switch either a MOSFET or an IGBT. Two sensor inputs and the retriggerable and adjustable tracking time useful for a wide range of applications. By using the reverse phase-control technique, the resistive load can be dimmed without the need of a compensation inductance. The integrated current monitoring function provides a very fast switch-off in case of a short-circuit condition. No additional fuse is needed.

Multifunction Timer IC

U2102B

Rev. 4767B–INDCO–10/05

Figure 1-1. Block Diagram

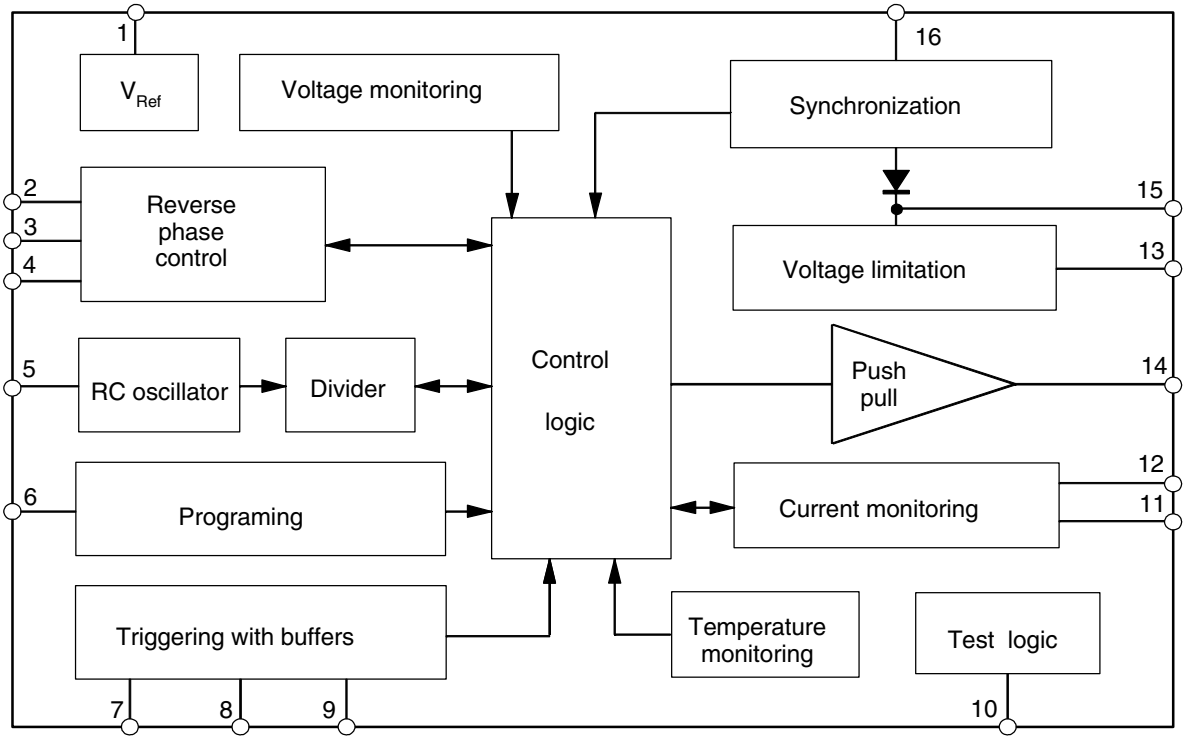

2. Pin Configuration

Figure 2-1. Pinning DIP16/SO16

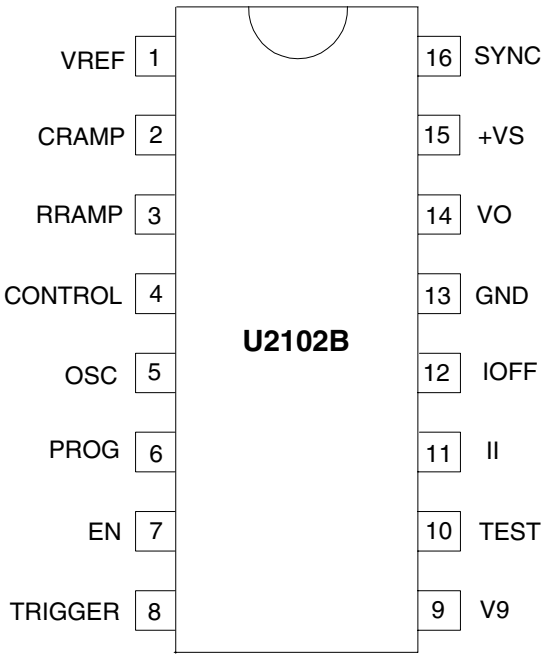

Pin Description

Pin	Symbol	Function
1	VREF	Reference voltage 5 V
2	CRAMP	Ramp capacitance
3	RRAMP	Current setting for ramp
4	CONTROL	Control voltage
5	OSC	RC oscillator
6	PROG	Tri-state programming
7	EN	Enable input
8	TRIGGER	Trigger input (window)
9	V9	Window adjustment
10	TEST	Test output
11	II	Input current monitoring
12	IOFF	Fast output current monitoring
13	GND	Ground
14	VO	Output voltage
15	+VS	Supply voltage
16	SYNC	Synchronization input

Figure 2-2. Block Diagram with Typical Circuit for DC Loads

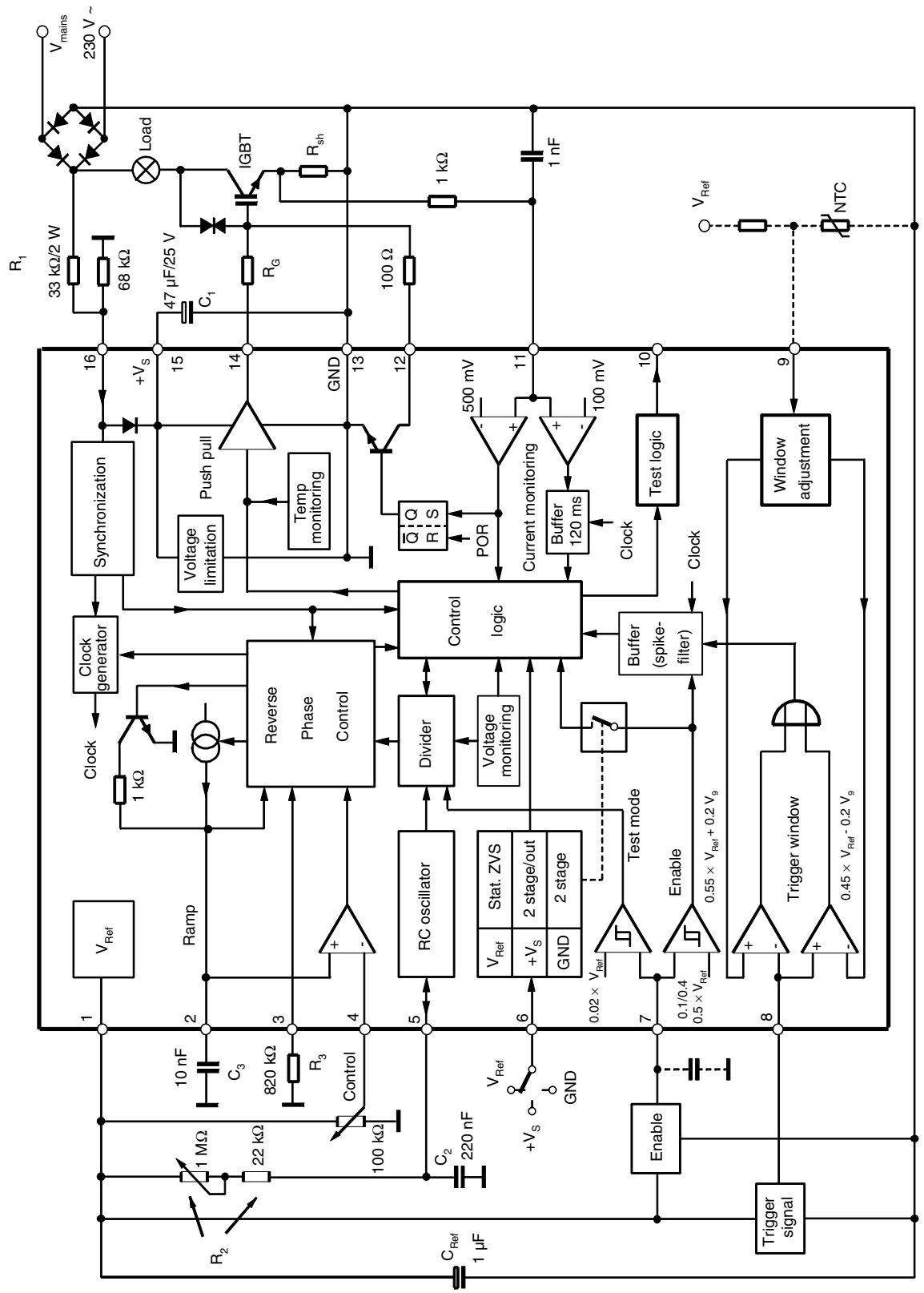

3. Power Supply, Synchronization Pins 15 and 16

The U2102B's voltage limitation circuit enables the power supply via the dropping resistor R_1. In the case of DC loads, the entire supply current flows into pin 16 and is supplied via an internal diode to pin 15, where the resultant supply voltage is limited and smoothed by C_1. The pull-down resistor at pin 16 is necessary in order to guarantee reliable synchronization. As a result, the rectified and divided line voltage appears at pin 16, where the amplitude is limited. The power supply for the circuit can be realized in all modes for DC loads as shown in Figure 2-2 on page 4. The voltage at pin 16 is used to synchronize the circuit with the mains and generate the system clock required for the buffers. The circuit detects a "zero crossing" when the voltage at pin 16 falls below an internal threshold of approximately 8 V.

Figure 3-1. Power Supply for DC Loads (R_1 is Identical with R_{sync})

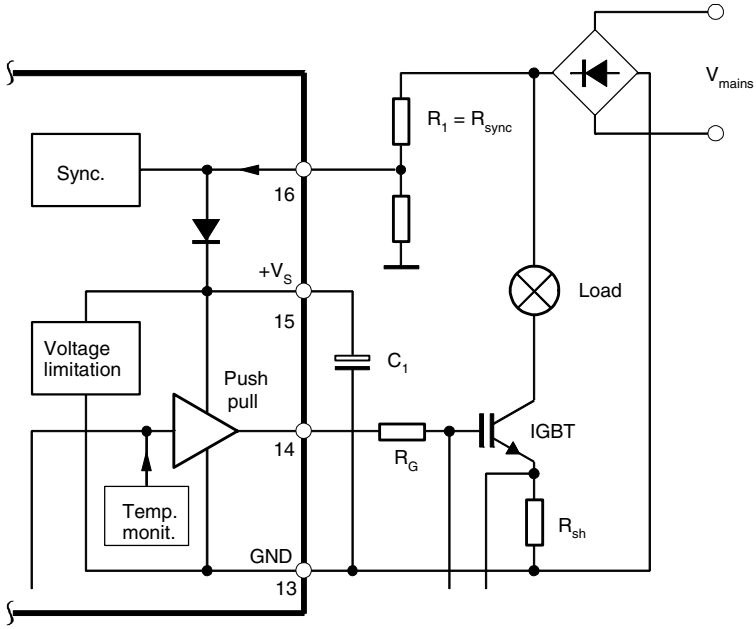

R_1 is calculated as follows:

$$R_{1max} = 0.85 \times \frac{V_{Nmin} - V_S}{I_{tot}}$$

where:

V_{Nmin} = V_{mains} – 15%

V_S = Supply voltage

I_{tot} = I_{Smax} + I_x

I_{Smax} = Maximum current consumption of the IC

I_x = Current consumption of the external components

In the case of AC loads, it is necessary to distinguish the power supply purposes of the individual operating modes. In reverse phase control mode (see Figure 3-1 on page 5), pin 15 must be additionally supplied with power via a dropping resistor, since no current flows in pin 16 when the power switch is switched on. Here, the dropping resistor, R_1, is connected to the AC line and has therefore only one mains half-wave. R_1 is then calculated as follows:

$$R_{1max} = 0.85 \times \frac{V_{Nmin} - V_S}{2 \times I_{tot}}$$

Figure 3-2. Power Supply in Reverse Phase Control Mode for AC Loads

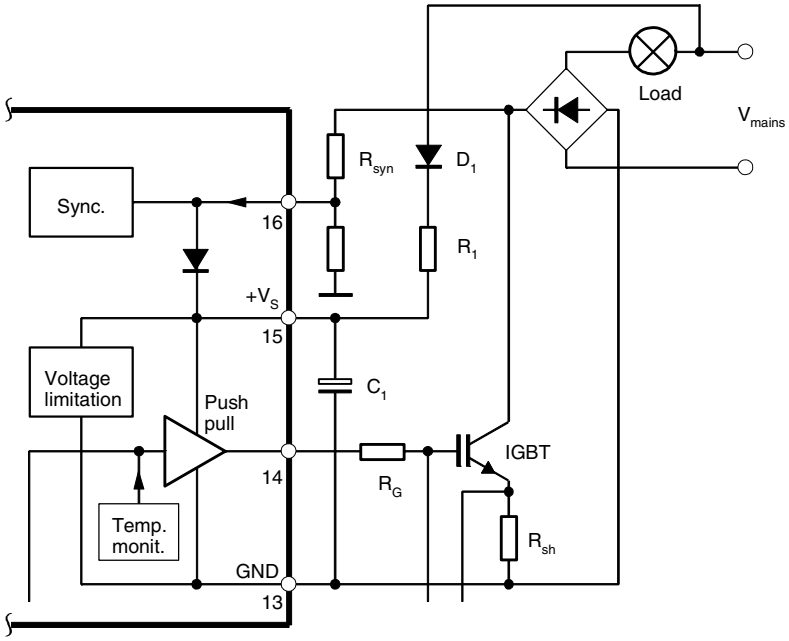

In two-wire systems, the additional power supply at pin 15 is not possible (see Figure 3-1 on page 5, by omitting R_1 and diode D_1). In this case, the resistor R_{sync} is identical with R_1 and should be as low as the power dissipation allows it. A sufficiently large residual phase angle must remain in this case to guarantee the device's supply.

The power supply is simplified if the device is operated as a static zero-voltage switch for AC loads (see Figure 3-2). All delay times are then twice as long, since the synchronization of the module is connected directly to the AC line.

Figure 3-3. Power Supply as Static Zero-voltage Switch for AC Loads

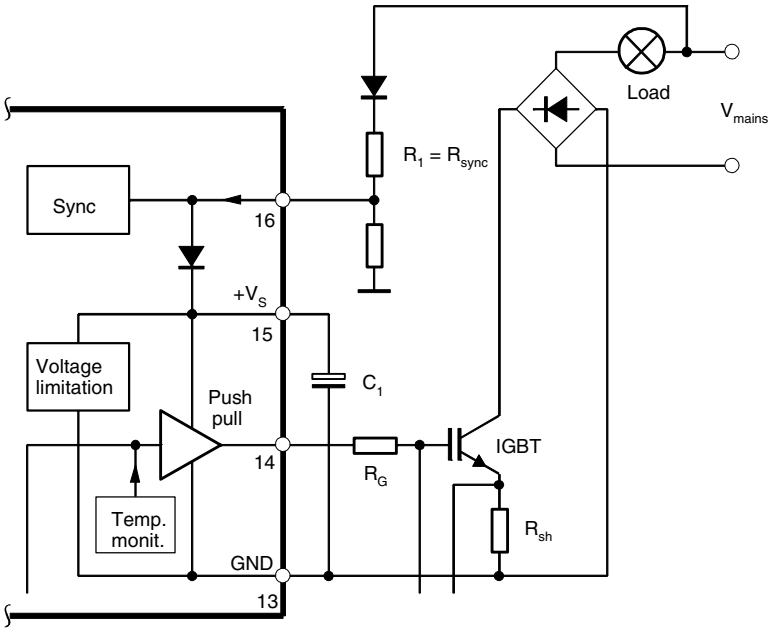

4. Voltage Monitoring

The internal voltage monitoring circuit surpresses uncontrolled conditions or output pulses of insufficient amplitude which may occur while the operating voltage is being built up or reduced. All latches in the circuit, the divider and the control logic are reset. When the supply voltage is applied, the enable threshold (clamp voltage) of approximately 16 V must be reached so that the circuit is enabled. The circuit is reset at approximately 11 V if the supply voltage breaks down. A further threshold is activated in reverse phase control mode. If the supply voltage breaks down in this mode, after the circuit has been enabled, the output stage is switched off at approximately 12.5 V, while the other parts of the circuit are not affected. The output stage can then be switched on again in the following half-wave. As a result, the residual phase angle remains just large enough, (e.g., in two-wire systems), so that the circuit can still be properly supplied with power. In all operating modes, a single operating cycle is started after the supply voltage is applied, independently of the trigger inputs, in order to immediately demonstrate the overall function.

5. Chip Temperature Monitoring

The U2102B includes a chip temperature monitoring circuit which disables the output stage when a temperature of approximately 140°C is reached. The circuit will only be enabled again after cooling down and when the operating voltage has been additionally switched off and on.

6. Reverse Phase Control

In the case of normal phase controls, e.g., with a triac, the load current will only be switched on at a certain phase angle after the zero crossing of the mains voltage. In the following zero crossing of the current, the triac gets extinguished (switched-off) automatically. Reverse phase control differs from this in that the load current is always switched on by a semiconductor switch (for example, IBGT) at the zero crossing of the mains voltage and then switched back off again after a certain phase angle α. This has the advantage that the load current always rises with the mains voltage in a defined manner and thus keeps the required interference suppression to a minimum.

The charging current for the capacitor C_3 at pin 2 is set with the resistor R_3 at pin 3. When the synchronization circuit recognizes a zero crossing, an increased charging current of $I_2 \approx 4 \times I_3$ is enabled which then charges C_3 up to $\approx$ 0.45 V. The output stage is switched on at this value and the charging current for C_3 is reduced to $I_2 = I_3$. Since the actual zero crossing of the supply voltage occurs later than recognized by the circuit, the load current starts to flow quite close to the exact zero crossing of the supply voltage. While the output stage is switched on, C_3 is charged until the control voltage, set externally at pin 4, is reached. When this condition is reached, the output stage is switched off and C_3 is charged again with the increased current ($I_2 \approx 4 \times I_3$) to $V_2 \approx$ 5.5 V. The charging current is switched off at this point and C_3 is discharged internally. The whole process then starts again when the circuit recognizes another zero crossing (Figure 3-3 on page 7).

Figure 6-1. Signal Characteristics of Reverse Phase Control

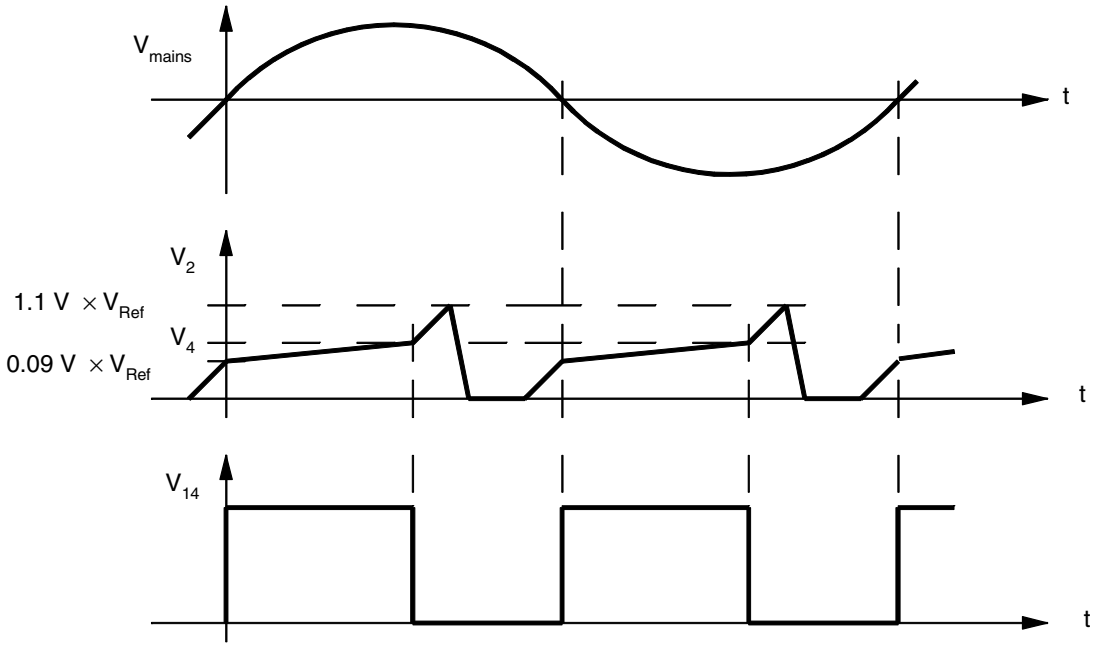

7. Programming

Three operating modes can be programmed with the tri-state input pin 6:

- Zero-voltage switch (ZVS) with static output ($V_6 = V_1 = V_{Ref}$):

  The reverse phase control is inactive here. The output stage is statically switched on after triggering by the timer and switched off again after the running down of the time (at the zero crossing of the supply voltage in each case). This operating mode is not possible in two-wire systems.

- Reverse phase control with two-stage switch-off ($V_6 = V_{15} = V_S$):

  The maximum current flow angle, α_{max}, is set when the timer has enabled the output stage. Switchover to the phase angle α, which can be set arbitrarily at pin 4, takes place after expiry of 3/4 of the tracking time set at pin 5. The output stage switches off after expiry of the whole tracking time.

- Two-stage reverse phase control with dimming function ($V_6 = V_{13}$ = GND):

  The output stage switches to the maximum current flow angle, α_{max}, (adjustable) if the trigger condition for both inputs (pins 7, 8) is satisfied. Switchover to the current flow angle, α, set at pin 4 takes place after expiry of 3/4 of the tracking time set at pin 5. The whole process is repeated from the beginning if renewed triggering takes place at pin 8. The lamp is switched-off in the following half-wave of the mains voltage if the trigger condition at pin 7 disappears. In this mode, the output stage is switched-on even if only pin 7 is in the ON state. The current flow angle is then determined by V_4 (e.g., house number illumination, twilight switch).

8. Trigger Inputs

The trigger condition of the timer is determined by the two inputs at pins 7 and 8. A Light Dependent Resistor (LDR) can be connected to pin 7, for example, and an IR sensor to pin 8. Since both inputs are equal and AND-gated they must both be in the ON state to initiate triggering. In the operating mode “2-stage reverse phase control”, the output stage can additionally be switched on and switched off by pin 7 alone and independently of the timer.

The enable input pin 7 is implemented as a comparator with hysteresis. The enable threshold is approximately 2.5 V. The blocking threshold is switched by the control logic in order to avoid faults as a result of load switching. This threshold is approximately 2 V in switched off condition and also during the second current flow angle, α, in two-stage reverse phase control mode. Otherwise, the blocking or switch-off threshold is 0.5 V.

The input pin 8 is designed as a window discriminator, its window is set at pin 9. The minimum window of approximately 250 mV is set with $V_9 = V_{13}$, and the maximum window of approximately 1.25 V with $V_9 = V_I$. The window discriminator is in the OFF state when the voltage at pin 8 lies within the window set at pin 9.

If a resistor divider with an NTC resistor is connected to pin 9, for example, it is possible to compensate the temperature dependence of the IR sensor, i.e., the range is made independent of temperature.

Noise suppression for t_{ON} = 40 ms guarantees that there are no peak noise signals at the inputs which could trigger the circuit. Equally, renewed triggering is prevented for t_{OFF} = 640 ms after load switch-off to avoid any self interference.

Figure 8-1. Trigger Condition Pin 7

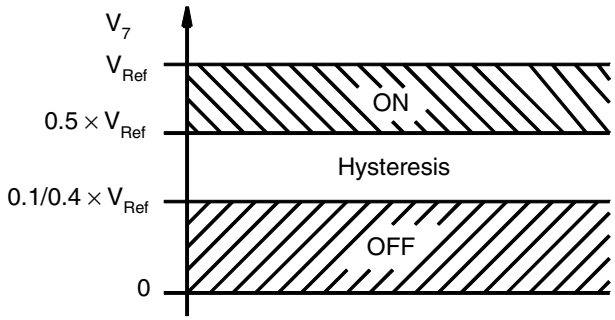

Figure 8-2. Trigger Condition Pin 8

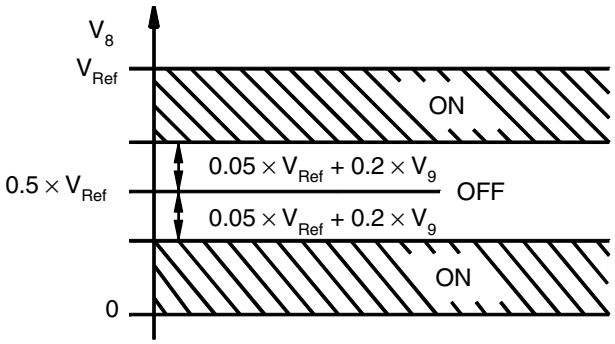

9. RC Oscillator

An internal RC oscillator with following divider stage $1:2^{11}$ permits a very long and reproducible tracking time.

The RC values for a certain tracking time, t_t, are calculated as follows:

$$R_2(k\Omega) = \frac{t_t(s)10^3}{1.4 \times 2048\ C_2\ (\mu F)}$$

$$C_2(\mu F) = \frac{t_t(s)10^3}{1.4 \times 2048\ R_2\ (k\Omega)}$$

In reverse phase control mode, switchover from maximum current flow angle to the value set at pin 4 takes place after expiry of 3/4 of the total tracking time t_t.

10. Current Monitoring

The U2102B's current monitoring circuit represents a double electronic fuse. The circuit measures the current flowing through the power switch by means of the voltage drop across the shunt resistor R_{sh}. This voltage is supplied to pin 11. If this voltage exceeds a value of 500 mV due to a high load current (e.g., short circuit), the switch-off latch is set and the switching output pin 11 closes immediately. Pin 11 can be connected to the gate via a resistor or network, depending on load conditions, thus allowing the switch-off behavior to be adapted to the respective requirements. The short-circuit current is reduced to a problem-free value by this procedure.

There is a second threshold at 100 mV. Without exceeding the switch-off threshold of 500 mV, the output stage is also disabled in the voltage at pin 11 exceeds the value of 100 mV for ≥ 120 ms at one half-wave. To prevent the occurrence of high-voltage peaks in the over current condition due to the line and leakage inductances, the output stage is not switched off immediately. It is disabled during the next half-wave.

11. Absolute Maximum Ratings

Stresses beyond those listed under "Absolute Maximum Ratings" may cause permanent damage to the device. This is a stress rating only and functional operation of the device at these or any other conditions beyond those indicated in the operational sections of this specification is not implied. Exposure to absolute maximum rating conditions for extended periods may affect device reliability.

Reference point pin 13, unless otherwise specified.

Parameters	Pin	Symbol	Value	Unit
Power supply Current t < 10 µs	15	 I_S i_s	 20 60	 mA mA
Synchronization Input current t ≤10 µs	16	 I_I i_i	 20 60	 mA mA
Reference voltage source Output current	1	 $- I_{Ref}$	 10	 mA
Push-pull output stage Output current t ≤2 ms	 14 14	 $\pm I_O$ $\pm i_o$	 10 60	 mA mA
Input currents	2 2 3 10 12	$-I_I$ I_I $-I_I$ $\pm I_I$ I_I	1 8 0.2 1 20	mA mA mA mA mA
Input voltage	4, 5, 7, 8, 9, 11 6 and 12	V_I V_I	0 to V_1 0 to V_{15}	V V
Storage temperature range		T_{stg}	-40 to +125	°C
Junction temperature		T_j	+125	°C
Ambient temperature		T_{amb}	-10 to +100	°C

12. Thermal Resistance

Parameters		Symbol	Value	Unit
Junction ambient	DIP16	R_{thJA}	120	K/W
	SO16 on PC board	R_{thJA}	180	K/W
	SO16 on ceramic	R_{thJA}	100	K/W

13. Electrical Characteristics

V_S = 15.0 V, f_{mains} = 50 Hz, T_{amb} = 25°C, reference point pin 13, unless otherwise specified.

Parameters	Test Conditions	Pin	Symbol	Min.	Typ.	Max.	Unit
Supply Voltage Limitation	I_S = 2 mA I_S = 5 mA	15	V_S V_S	15 15.2		17 17.2	V V
Current Consumption	V_S = 15 V	15	I_S			2	mA
Voltage Monitoring		15					
Switch-on threshold Switch-off threshold Undervoltage threshold			V_{SON} V_{SOFF} V_{15}	14.8 10.4 11.7	 11 12.5	16.5 11.6 13.3	V V V
Reference Voltage	$-I_1$ = 0 to 5 mA	1	V_{Ref}	4.75	5	5.25	V
Synchronization							
Voltage limitation Input current Zero crossing switch-on threshold Zero crossing switch-off threshold	I_{16} = 2 mA V_{16} = 0 V	15, 16 16 16 16	V_{limit} $-I_I$ V_{TON} V_{TOFF}	 7.3 7.9	0.8 100 7.7 8.3	 8.1 8.7	V µA V V
Reverse Phase Control		3					
Ramp current setting Input current Input voltage	 I_3 = -10 µA	 	 $-I_I$ V_3	 4.7	 5	 50 5.3	 µA V
Ramp	I_3 = -10 µA	2					
Charging current 1 Charging current 2 Discharge impedance Switch-on threshold, output stage Discharge threshold voltage		 1, 2	$-I_{ch1}$ $-I_{ch2}$ R_{dis} V_{TON} V_{dis}	9 37 410 	10 40 1 450 600	11 43 490 	µA µA kΩ mV mV
Control Voltage		4					
Input voltage Input current	 $V_{13} \leq V_4 \leq V_I$	 	V_I $\pm I_I$	0 	 	V_{Ref} 500	V nA
Programming, Tri-state Input		6					
Input current	$V_{13} \leq V_6 \leq V_{15}$		$\pm I_I$			1	µA
Operating mode: Static zero-voltage switch 2-stage reverse phase control with switch-off 2-stage reverse phase control	 	 V_I V_I	 1 V_{Ref} + 1 0	 	 V_{Ref} + 0.3 V_S 0.3	 V V
RC Oscillator		5					
Input current Upper threshold Lower threshold Discharge impedance	$V_{13} \leq V_5 < 3.6$ V	 	$\pm I_I$ V_{TU} V_{TL} R_{dis}	 3.6 0.9 	 4 1 1	500 4.4 1.1 	nA V V kΩ

13. Electrical Characteristics (Continued)

V_S = 15.0 V, f_{mains} = 50 Hz, T_{amb} = 25°C, reference point pin 13, unless otherwise specified.

Parameters	Test Conditions	Pin	Symbol	Min.	Typ.	Max.	Unit
Window Discriminator							
Input current	$0\ V \le V_8 \le V_I$	8	$\pm I_I$			500	nA
Upper threshold Lower threshold		8, 9	V_{TU} V_{TL}	$0.55 \times V_{Ref} + (0.2 \times V_9)$ $0.45 \times V_{Ref} - (0.2 \times V_9)$			V V
Input current window adjustment	$0\ V \le V_9 \le V_1$	9	$\pm I_i$			500	nA
Minimum window: Lower threshold Upper threshold	$V_9 = V_{13}$	8	 V_{TL1} V_{TU1}	 2.05 2.55	 2.75 3.75	 2.45 2.95	 V V
Maximum window: Lower threshold Upper threshold	$V_9 = V_1$	8	 V_{TL2} V_{TU2}	 1.1 3.4	 1.25 3.75	 1.4 4.1	 V V
Enable Schmitt Trigger		7					
Input current	$0\ V \le V_7 \le V_I$		$\pm I_i$			500	nA
Enable threshold			V_T	2.3	2.5	2.7	V
Blocking threshold: Output stage OFF Output stage ON, except in the case of two-stage reverse phase control in second stage (α)			 V_T V_T	 1.8 0.45	 2 0.5	 2.2 0.55	 V V
Threshold for test mode			V_T	85	100	115	mV
Current Monitoring		11					
Input current Switch-off threshold 1 Switch-off threshold 2	$0\ V \le V_{11} \le V_1$		$\pm I_i$ V_{T1} V_{T2}	 80 450	 100 500	500 120 550	nA mV mV
Switching Output		12					
Leakage current	$V_{11} < 450$ mV, $V_{12} \le V_{15}$		I_{lkg}			1	µA
Saturation voltage	$V_{11} > 550$ mV $I_{12} = 0.5$ mA $I_{12} = 10$ mA		 V_{Sat} V_{Sat}			 1.0 1.2	 V V
Push-pull Output Stage							
Upper saturation voltage, ON state	$I_{14} = -10$ mA	14, 15	$-V_{Sat}$			2.4	V
Lower saturation voltage, OFF state	$I_{14} = 10$ mA	14	V_{SatL}			1.2	V
Output current	ON state OFF state	14	$-I_O$ I_O	50 50			mA mA

Figure 13-1. House Number or Staircase Illumination for AC Loads
House Number Illumination: $V_6 = V_{13}$
Staircase Illumination: $V_6 = V_{15}$

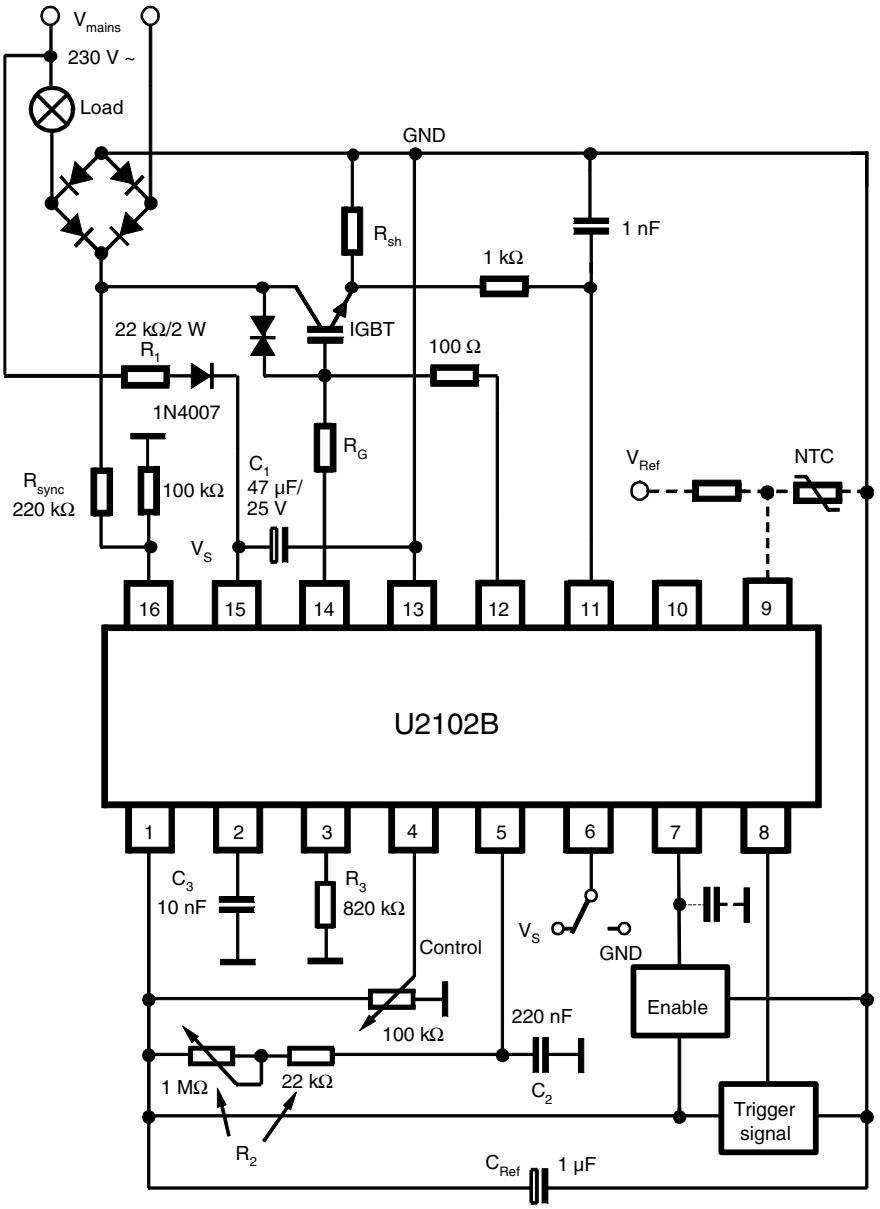

Figure 13-2. Zero-voltage Switch Mode for AC Loads

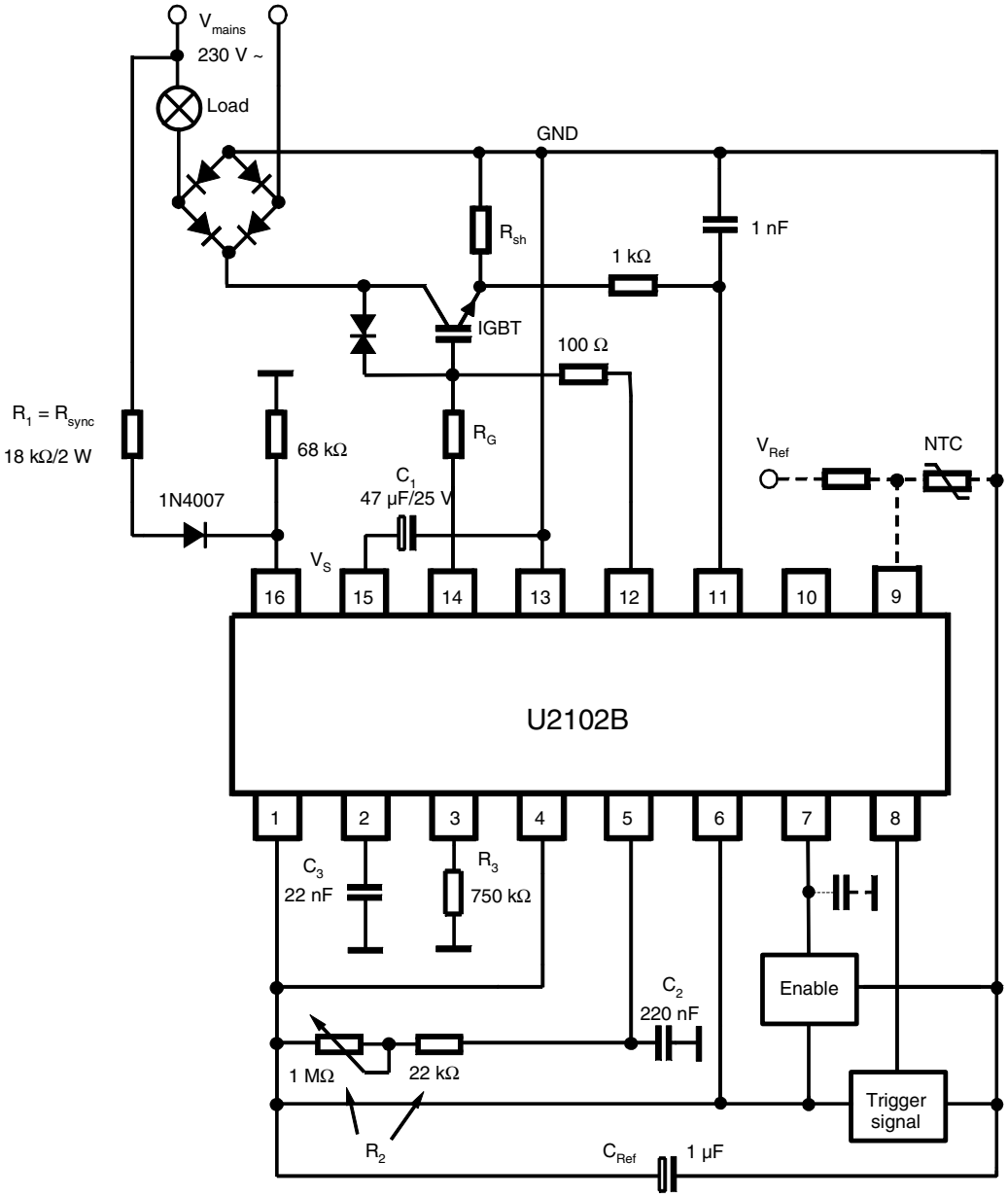

Figure 13-3. Reverse Phase Control for AC Loads

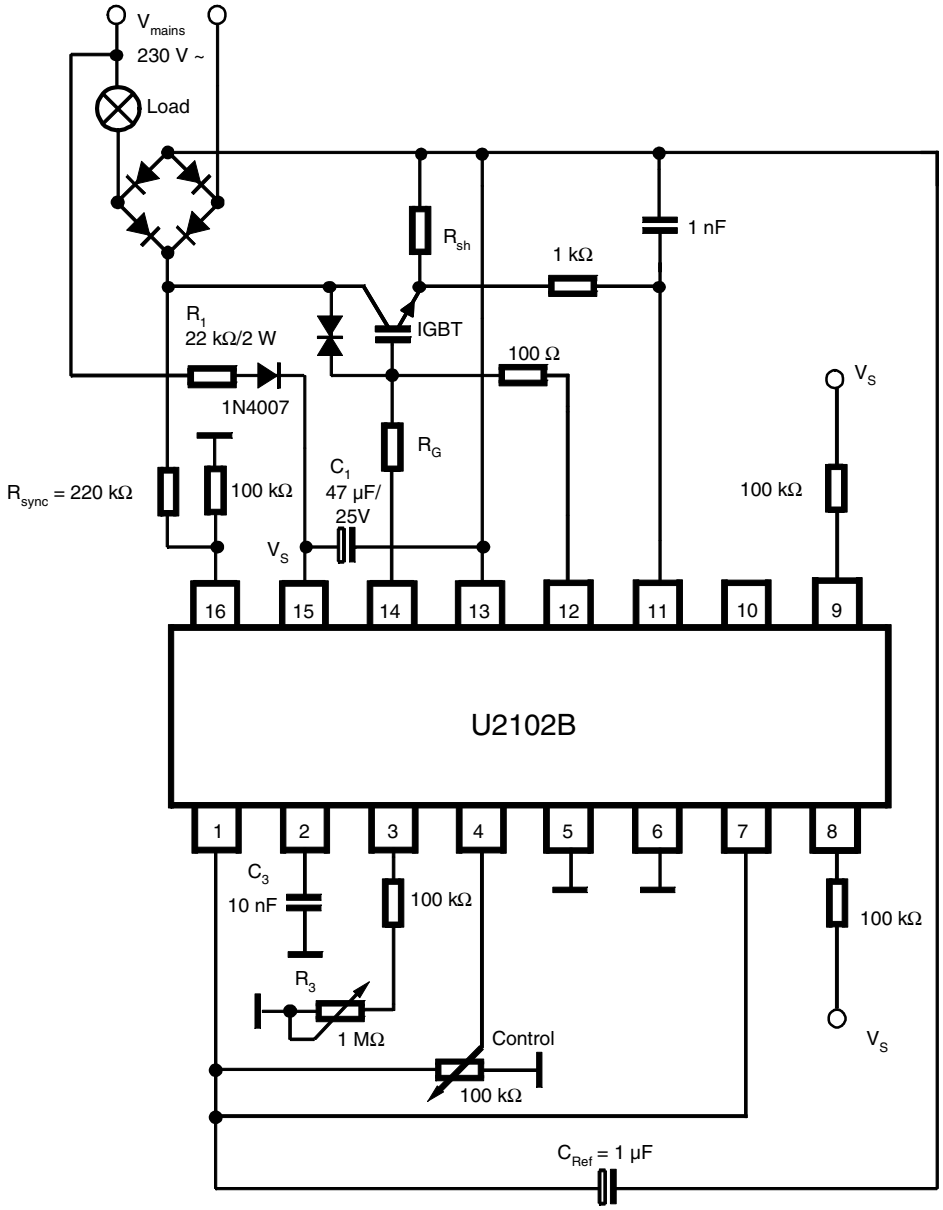

14. Ordering Information

Extended Type Number	Package	Remarks
U2102B-xY	DIP16	Tube, Pb-free
U2102B-xFPY	SO16	Tube, Pb-free
U2102B-xFPG3Y	SO16	Taped and reeled, Pb-free

15. Package Information

Package DIP16
Dimensions in mm

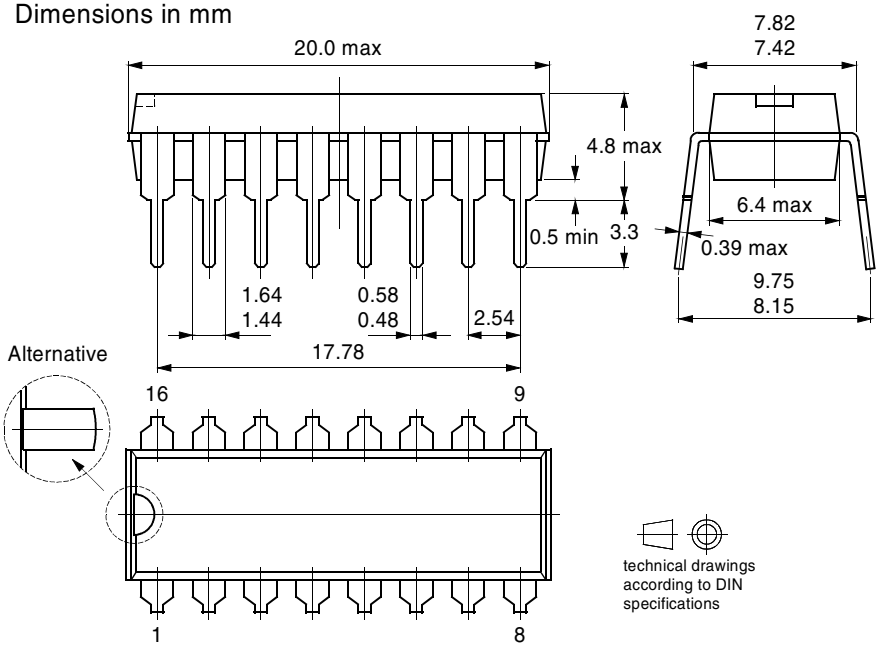

Package SO16

Dimensions in mm

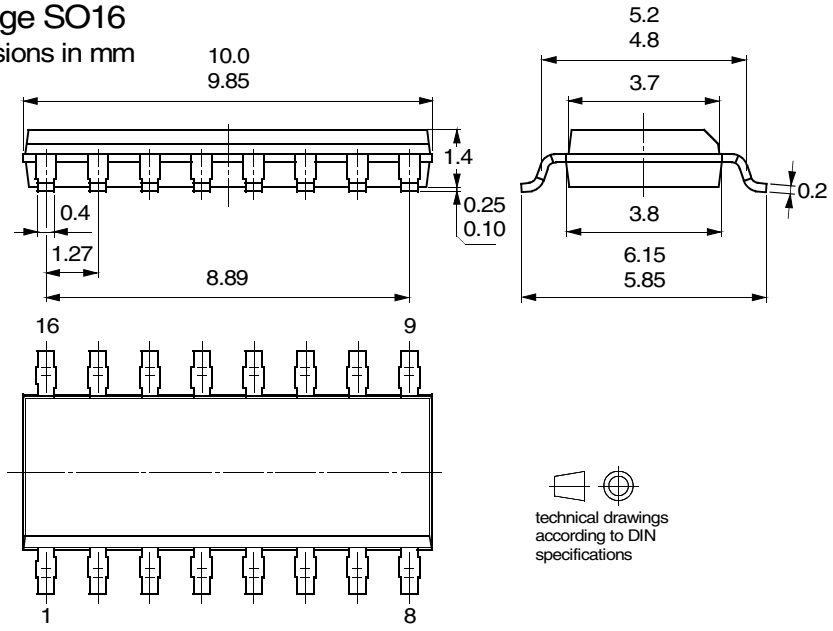

16. Revision History

Please note that the following page numbers referred to in this section refer to the specific revision mentioned, not to this document.

Revision No.	History
4767B-INDCO-08/05	• Put datasheet in a new template • First page: Pb-free logo added • Page 17: Ordering Information changed

Atmel Corporation

2325 Orchard Parkway
San Jose, CA 95131, USA
Tel: 1(408) 441-0311
Fax: 1(408) 487-2600

Regional Headquarters

Europe
Atmel Sarl
Route des Arsenaux 41
Case Postale 80
CH-1705 Fribourg
Switzerland
Tel: (41) 26-426-5555
Fax: (41) 26-426-5500

Asia
Room 1219
Chinachem Golden Plaza
77 Mody Road Tsimshatsui
East Kowloon
Hong Kong
Tel: (852) 2721-9778
Fax: (852) 2722-1369

Japan
9F, Tonetsu Shinkawa Bldg.
1-24-8 Shinkawa
Chuo-ku, Tokyo 104-0033
Japan
Tel: (81) 3-3523-3551
Fax: (81) 3-3523-7581

Atmel Operations

Memory
2325 Orchard Parkway
San Jose, CA 95131, USA
Tel: 1(408) 441-0311
Fax: 1(408) 436-4314

Microcontrollers
2325 Orchard Parkway
San Jose, CA 95131, USA
Tel: 1(408) 441-0311
Fax: 1(408) 436-4314

La Chantrerie
BP 70602
44306 Nantes Cedex 3, France
Tel: (33) 2-40-18-18-18
Fax: (33) 2-40-18-19-60

ASIC/ASSP/Smart Cards
Zone Industrielle
13106 Rousset Cedex, France
Tel: (33) 4-42-53-60-00
Fax: (33) 4-42-53-60-01

1150 East Cheyenne Mtn. Blvd.
Colorado Springs, CO 80906, USA
Tel: 1(719) 576-3300
Fax: 1(719) 540-1759

Scottish Enterprise Technology Park
Maxwell Building
East Kilbride G75 0QR, Scotland
Tel: (44) 1355-803-000
Fax: (44) 1355-242-743

RF/Automotive
Theresienstrasse 2
Postfach 3535
74025 Heilbronn, Germany
Tel: (49) 71-31-67-0
Fax: (49) 71-31-67-2340

1150 East Cheyenne Mtn. Blvd.
Colorado Springs, CO 80906, USA
Tel: 1(719) 576-3300
Fax: 1(719) 540-1759

Biometrics/Imaging/Hi-Rel MPU/
High Speed Converters/RF Datacom
Avenue de Rochepleine
BP 123
38521 Saint-Egreve Cedex, France
Tel: (33) 4-76-58-30-00
Fax: (33) 4-76-58-34-80

Literature Requests
www.atmel.com/literature

Disclaimer: The information in this document is provided in connection with Atmel products. No license, express or implied, by estoppel or otherwise, to any intellectual property right is granted by this document or in connection with the sale of Atmel products. **EXCEPT AS SET FORTH IN ATMEL'S TERMS AND CONDITIONS OF SALE LOCATED ON ATMEL'S WEB SITE, ATMEL ASSUMES NO LIABILITY WHATSOEVER AND DISCLAIMS ANY EXPRESS, IMPLIED OR STATUTORY WARRANTY RELATING TO ITS PRODUCTS INCLUDING, BUT NOT LIMITED TO, THE IMPLIED WARRANTY OF MERCHANTABILITY, FITNESS FOR A PARTICULAR PURPOSE, OR NON-INFRINGEMENT. IN NO EVENT SHALL ATMEL BE LIABLE FOR ANY DIRECT, INDIRECT, CONSEQUENTIAL, PUNITIVE, SPECIAL OR INCIDENTAL DAMAGES (INCLUDING, WITHOUT LIMITATION, DAMAGES FOR LOSS OF PROFITS, BUSINESS INTERRUPTION, OR LOSS OF INFORMATION) ARISING OUT OF THE USE OR INABILITY TO USE THIS DOCUMENT, EVEN IF ATMEL HAS BEEN ADVISED OF THE POSSIBILITY OF SUCH DAMAGES.** Atmel makes no representations or warranties with respect to the accuracy or completeness of the contents of this document and reserves the right to make changes to specifications and product descriptions at any time without notice. Atmel does not make any commitment to update the information contained herein. Unless specifically provided otherwise, Atmel products are not suitable for, and shall not be used in, automotive applications. Atmel's products are not intended, authorized, or warranted for use as components in applications intended to support or sustain life.

© Atmel Corporation 2005. **All rights reserved.** Atmel®, logo and combinations thereof, Everywhere You Are® and others, are registered trademarks or trademarks of Atmel Corporation or its subsidiaries. Other terms and product names may be trademarks of others.

Printed on recycled paper.

4767B–INDCO–10/05