# Universal Power Supplies

## TXH 600 Series, 600 Watt

CE CB Scheme cULus UL 60950-1

## Features

- Universal input: 90–264 VAC or 120–370 VDC
- Active power factor correction (>0.95)
- High efficiency up to 93%
- Current share function for up to 3 units in parallel
- Adjustable output voltage
- EMI/EMC compliance with EN 61000-6-3 and EN 61000-6-1
- Remote control input
- Rear side IEC-C13 line socket, including mains switch and fuse
- DC-OK signal and 5 VDC auxiliary output
- Protection against over-voltage, over-temperature, overload and short circuit
- 3-year product warranty



The TXH 600 series models are very compact 600 Watt universal power supplies. Rear side IEC-C13 line socket including mains switch and fuse and the output screw terminal make the connection of these power supplies very easy. Sense line, auxiliary output, remote control, adjustable output voltage, and current share line for up to 3 units in parallel make the units all-purpose applicable.
They come with an active power factor correction. The EMC characteristic is dedicated for applications in industry, IT and domestics. The protection against over-voltage, over-temperature, overload and short circuit and a high efficiency of up to 93% guaranties a reliable operation.

## Models

| Order code | Output power max. | Output voltage nom. | Output current max. | Efficiency typ. |
|---|---|---|---|---|
| TXH 120/240/360/480 | 120 – 480 Watt | see: www.tracopower.com/products/txh.pdf | | |
| TXH 600-112 | 540 Watt | 12 VDC | 45 A | 90 % |
| TXH 600-124 | 600 Watt | 24 VDC | 25 A | 92 % |
| TXH 600-148 | 600 Watt | 48 VDC | 12.5 A | 92 % |
| TXH 600-154 | 600 Watt | 54 VDC | 11.1 A | 93 % |

## Input Specifications

| | | |
|---|---|---|
| Input voltage | – nominal | 100 – 240 VAC |
| | – AC range (universal input) | 90 – 264 VAC |
| | – DC range | 120 – 370 VDC |
| | – Output power derating at operation below 110 VAC | 1%/V (110 - Vin) |
| Input frequency | | 47 – 63 Hz |
| Earth leakage current (240 VAC / 63 Hz) | | 3.5 mA max. |
| Harmonic limits | | EN 61000-3-2, Class A & D |
| | – Power factor | >0.99 at 115 VAC, >0.95 at 230 VAC |
| Input current at full load | – at 115 VAC / 230 VAC | rated 8.0 A / 3.5 A<br>typical: 6.0 A / 2.9 A |
| Circuit breaker (slow blow fuse) | | 16 A internal |

## Output Specifications

| | | |
|---|---|---|
| Voltage set accuracy | | ±2 % max. |
| Output voltage adjustment range | | ±5 % with internal potentiometer |
| Regulation | – Input variation | 1 % max. |
| | – Load variation (0–100%) | 1 % max. |
| Minimum load | | 1% |
| Ripple and noise (20 MHz bandwidth) | | <1% Vout [mVp-p] |
| Hold-up time | | 12 ms min. |
| Current limitation | | auto recovery |
| Short circuit protection | | no auto recovery (power disconnect required) |
| Overvoltage protection by Zener diode | | 120 % of Vout typ. auto recovery |
| Overtemperature protection | | auto recovery |
| Capacitive load, [µF] max. | 12 VDC models: | 60'000 µF max. |
| | 24 VDC models: | 50'000 µF max. |
| | 48 VDC models: | 20'000 µF max. |
| | 54 VDC models: | 10'000 µF max. |

## General Specifications

| | | |
|---|---|---|
| Temperature ranges | – Operating | –25°C to +65°C |
| | – Storage (non operating) | –25°C to +85°C |
| Derating | | 4 %/K above +50°C |
| Temperature coefficient | | 0.03 %/K |
| Humidity (non condensing) | | 95 % rel max. |
| Switching frequency (pulse width modulation PWM) | | 110 kHz typ. ±10% |
| Isolation voltage (60 sec.) | – Input/Output | 3'000 VAC |
| | – Input/Case | 1'500 VAC |
| | – Output/Case | 500 VAC |
| Reliability /calculated MTBF (MIL-HDBK-217F, at +25°C, ground benign) | | >100'000 h |

All specifications valid at nominal input voltage, full load and +25°C after warm-up time unless otherwise stated.

## General Specifications

| | | |
|---|---|---|
| Electromagnetic compatibility (EMC), Emissions | | EN 61000-3-2:2006+A1:2009+A2:2009<br>EN 61000-3-3:2008<br>EN 55022, class B |
| Electromagnetic compatibility (EMC), Immunity | | EN 55024 |
| | – Electrostatic discharge ESD | EN 61000-4-2 ±2 kV / ±4 kV, criteria A |
| | – RF field susceptibility | EN 61000-4-3 3 V/m, criteria A |
| | – Electrical fast transient / burst immunity input | EN 61000-4-4 ±1 kV, criteria A |
| | – Surge immunity line – neutral | EN 61000-4-5, ±1 kV, criteria A |
| | – Surge immunity line – PE, neutral – PE | EN 61000-4-5 ±2 kV, criteria A |
| | – Immunity to conducted RF disturbances | EN 61000-4-6 3 V, criteria A |
| | – Power frequency magnetic field immunity | EN 61000-4-8 1 A/m, criteria A |
| | – Mains voltage dips and interruptions | EN 61000-4-11 30 % 500 ms, criteria A<br>95 % 10 ms, criteria A<br>95 % 2500 ms, criteria B |
| EMC test report | | www.tracopower.com/products/txh600-emc.pdf |
| Degree of protection | | class I |
| Safety standards | | UL 60950-1, IEC 60950-1 2nd: Am 1,<br>EN 60950-1:2006/A11:2009/A1:2010/A12:2011 |
| Safety approvals | – UL online certification UL/cUL 60950-1 | www.ul.com -> certifications -> File e188913 |
| | – CB certificate according to IEC/EN 60950-1 | www.tracopower.com/products/txh600-cb.pdf |
| Environment | – Vibration | 3 axes, sine sweep, 10–500Hz, 2g, 0.1 oct/min |
| Altitude during operation | | up to 2000 m (6560 ft) |
| Environmental compliance | – Reach | www.tracopower.com/products/txh-reach.pdf |
| | – RoHS | RoHS directive 2011/65/EU |

## Block Diagram

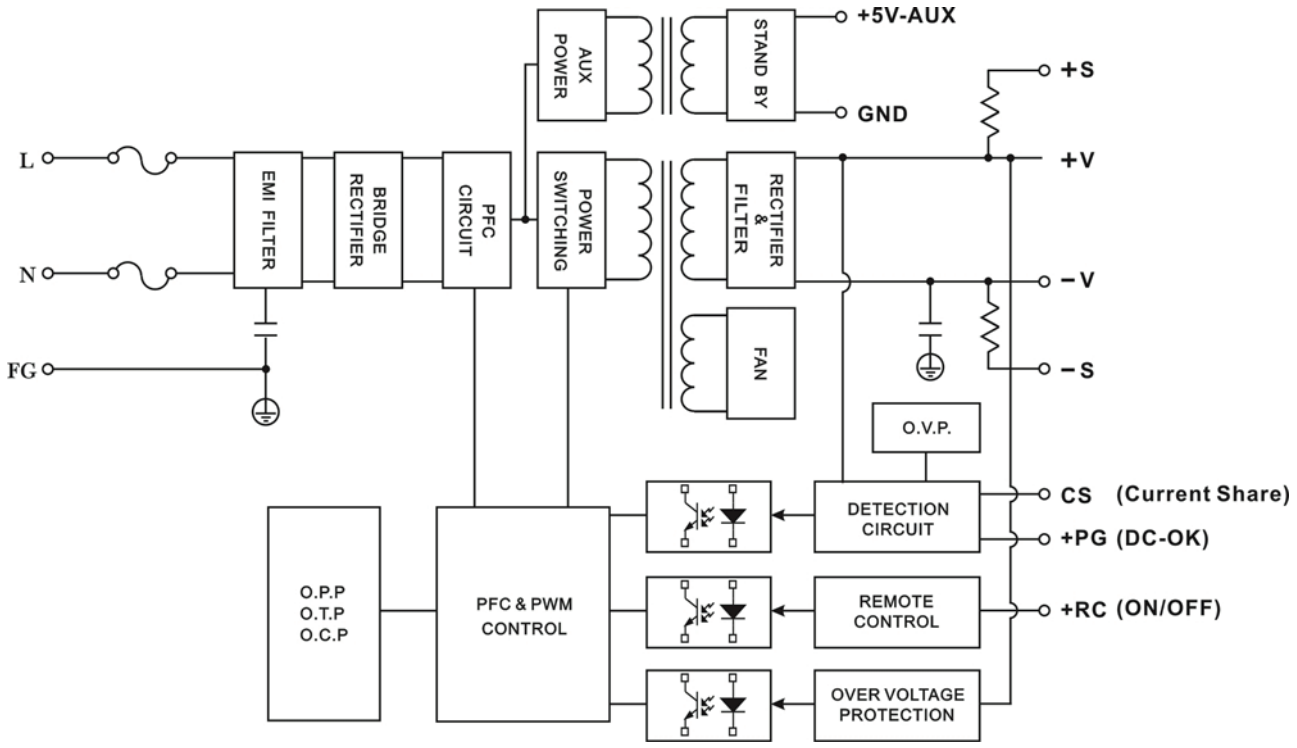

## Functions

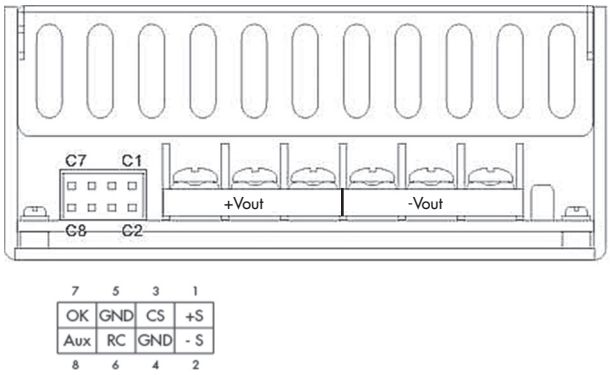


Vout terminals are rated for 25 A max.
At higher current connection has to be splitted.

| Control connector | |
|---|---|
| C1 | + Sense |
| C2 | – Sense |
| C3 | Current share |
| C4 | GND (internal connection to –Vout) |
| C5 | |
| C6 | Remote Control: open = On, short to GND = Off |
| C7 | DC-OK signal: 4-6 VDC = On, 0-1 VDC = Off |
| C8 | +5 VDC aux. ±10%, 0.6 A max. |

Mating connector:
Housing: JST PHDR-08VS
Crimp: JST SPHD-002T-P0.5

Connection cable with 500mm
flying leads included!

**Parallel operation:**

- Difference in Vout among paralleled units should be less than +/-1%
- Output power at parallel operation = rated power per unit x number of unit x 80%
- Shorter wiring to each unit is recommended, as well as twisting +S and -S in pairs, as shown.

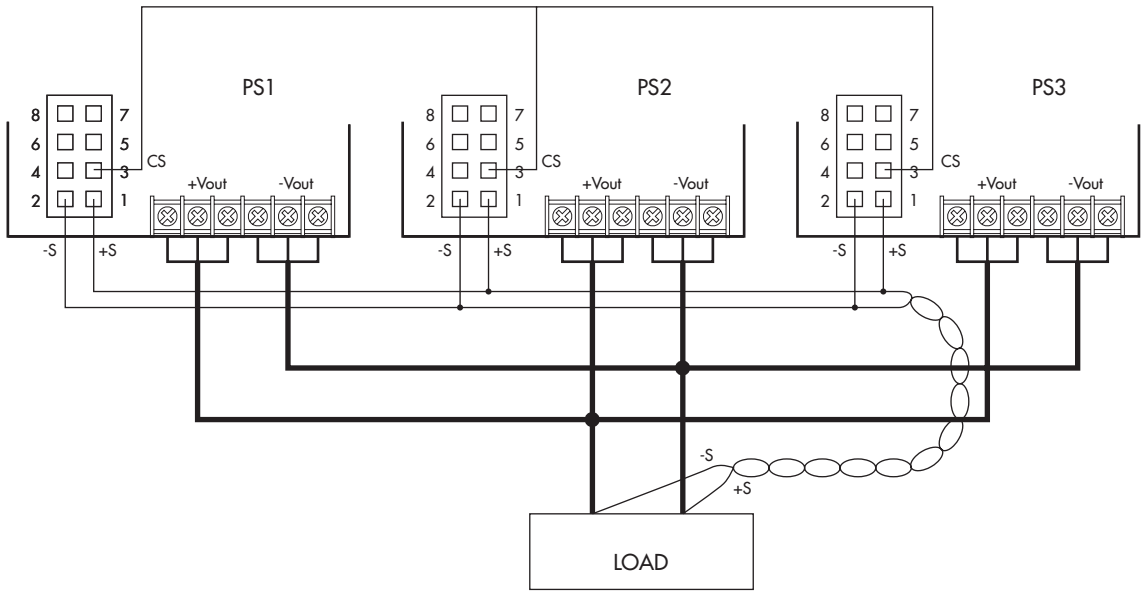

## Outline Dimensions

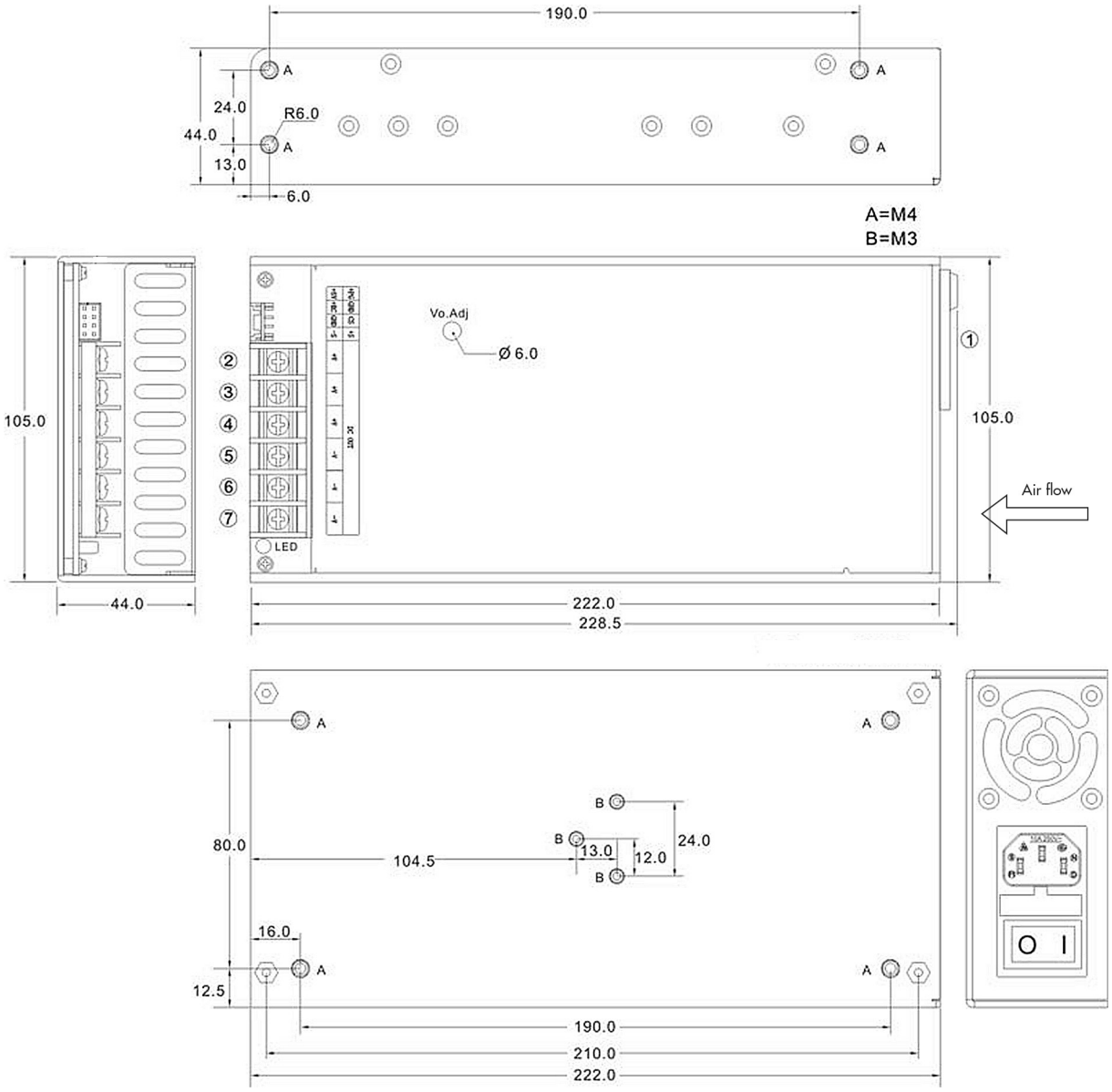


**Weight:** 1030 g

Max. mounting screw penetration: 2.5 mm

Dimensions in [mm]
Tolerance ±05 mm

| Connection | |
|---|---|
| 1 | AC in<br>IEC-C13 line socket |
| 2-4 | + Vout |
| 5-7 | – Vout |