TXB0108 8-Bit Bidirectional Voltage-Level Translator with Auto-Direction Sensing and ±15-kV ESD Protection

1 Features

- 1.2 V to 3.6 V on A Port and 1.65 V to 5.5 V on B Port ($V_{CCA} \leq V_{CCB}$)
- V_{CC} Isolation Feature – If Either V_{CC} Input Is at GND, All Outputs Are in the High-Impedance State
- OE Input Circuit Referenced to V_{CCA}
- Low Power Consumption, 4-µA Max I_{CC}
- I_{off} Supports Partial-Power-Down Mode Operation
- Latch-Up Performance Exceeds 100 mA Per JESD 78, Class II
- ESD Protection Exceeds JESD 22
  - A Port
    - 2000-V Human-Body Model (A114-B)
    - 1000-V Charged-Device Model (C101)
  - B Port
    - ±15-kV Human-Body Model (A114-B)
    - ±8-kV Human-Body Model (A114-B) (YZP Package Only)
    - 1000-V Charged-Device Model (C101)

2 Applications

- Handset
- Smartphone
- Tablet
- Desktop PC

3 Description

This 8-bit noninverting translator uses two separate configurable power-supply rails. The A port is designed to track V_{CCA}. V_{CCA} accepts any supply voltage from 1.2 V to 3.6 V. The B port is designed to track V_{CCB}. V_{CCB} accepts any supply voltage from 1.65 V to 5.5 V. This allows for universal low-voltage bidirectional translation between any of the 1.2-V, 1.5-V, 1.8-V, 2.5-V, 3.3-V, and 5-V voltage nodes. V_{CCA} should not exceed V_{CCB}.

When the output-enable (OE) input is low, all outputs are placed in the high-impedance state.

The TXB0108 is designed so that the OE input circuit is supplied by V_{CCA}.

This device is fully specified for partial-power-down applications using I_{off}. The I_{off} circuitry disables the outputs, preventing damaging current backflow through the device when it is powered down.

To ensure the high-impedance state during power-up or power-down, OE should be tied to GND through a pulldown resistor; the minimum value of the resistor is determined by the current-sourcing capability of the driver.

Device Information(1)

PART NUMBER	PACKAGE	BODY SIZE (NOM)
TXB0108	TVSOP (20)	5.00 mm x 4.40 mm
	SON (20)	2.00 mm x 4.00 mm
	BGA MICROSTAR JUNIOR (20)	2.50 mm x 3.00 mm
	TSSOP (20)	6.50 mm x 4.40 mm
	VQFN (20)	4.50 mm x 3.50 mm
	DSGBA (20)	1.90 mm x 2.40 mm

(1) For all available packages, see the orderable addendum at the end of the datasheet.

Typical Application Block Diagram for TXB010X

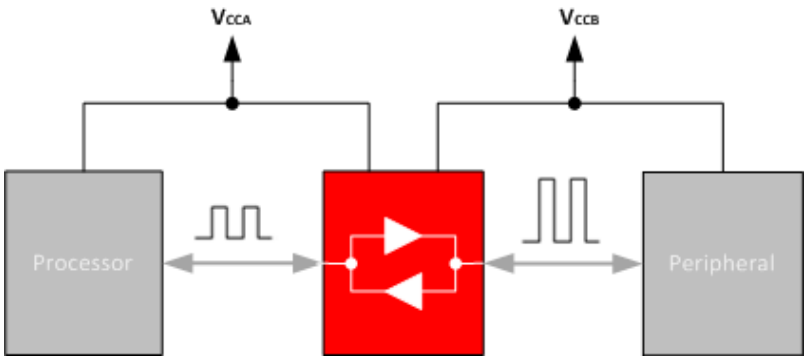

An IMPORTANT NOTICE at the end of this data sheet addresses availability, warranty, changes, use in safety-critical applications, intellectual property matters and other important disclaimers. PRODUCTION DATA.

Table of Contents

1 Features ... 1
2 Applications ... 1
3 Description ... 1
4 Revision History ... 2
5 Pin Configuration and Functions ... 3
6 Specifications ... 5
6.1 Absolute Maximum Ratings ... 5
6.2 Handling Ratings ... 5
6.3 Recommended Operating Conditions ... 5
6.4 Thermal Information ... 6
6.5 Electrical Characteristics ... 6
6.6 Timing Requirements: V_{CCA} = 1.2 V ... 7
6.7 Timing Requirements: V_{CCA} = 1.5 V ± 0.1 V ... 7
6.8 Timing Requirements: V_{CCA} = 1.8 V ± 0.15 V ... 7
6.9 Timing Requirements: V_{CCA} = 2.5 V ± 0.2 V ... 7
6.10 Timing Requirements: V_{CCA} = 3.3 V ± 0.3 V ... 7
6.11 Switching Characteristics: V_{CCA} = 1.2 V ... 7
6.12 Switching Characteristics: V_{CCA} = 1.5 V ± 0.1 V ... 8
6.13 Switching Characteristics: V_{CCA} = 1.8 V ± 0.15 V ... 8
6.14 Switching Characteristics: V_{CCA} = 2.5 V ± 0.2 V ... 8
6.15 Switching Characteristics: V_{CCA} = 3.3 V ± 0.3 V ... 9
6.16 Operating Characteristics ... 9
6.17 Typical Characteristics ... 10
7 Parameter Measurement Information ... 11
8 Detailed Description ... 12
8.1 Overview ... 12
8.2 Functional Block Diagram ... 12
8.3 Feature Description ... 13
8.4 Device Functional Modes ... 14
9 Application and Implementation ... 15
9.1 Application Information ... 15
9.2 Typical Application ... 15
10 Power Supply Recommendations ... 17
11 Layout ... 17
11.1 Layout Guidelines ... 17
11.2 Layout Example ... 17
12 Device and Documentation Support ... 18
12.1 Trademarks ... 18
12.2 Electrostatic Discharge Caution ... 18
12.3 Glossary ... 18
13 Mechanical, Packaging, and Orderable Information ... 18

4 Revision History

NOTE: Page numbers for previous revisions may differ from page numbers in the current version.

Changes from Revision E (April 2012) to Revision F — **Page**

- Added *Pin Configuration and Functions* section, *Handling Rating* table, *Feature Description* section, *Device Functional Modes*, *Application and Implementation* section, *Power Supply Recommendations* section, *Layout* section, *Device and Documentation Support* section, and *Mechanical, Packaging, and Orderable Information* section ... 1
- Changed V_{OLA} value 0.9 to 0.3 ... 6

Changes from Revision D (September 2011) to Revision E — **Page**

- Added notes to pin out graphics. ... 3

Changes from Revision C (August 2011) to Revision D — **Page**

- Added ±8-kV Human-Body Model (A114-B) (YZP Package Only) to Features ... 1

Copyright © 2006–2014, Texas Instruments Incorporated

5 Pin Configuration and Functions

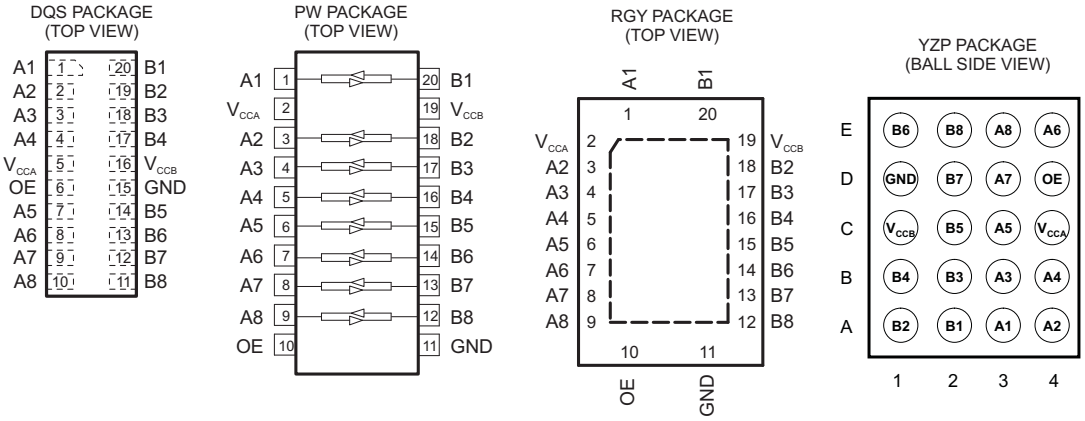

Note: For the RGY package, the exposed center thermal pad must be connected to ground.

A. Pullup resistors are not required on both sides for Logic I/O.

B. If pullup or pulldown resistors are needed, the resistor value must be over 50 kΩ.

C. 50 kΩ is a safe recommended value, if the customer can accept higher V_{OL} or lower V_{OH}, smaller pullup or pulldown resistor is allowed, the draft estimation is $V_{OL} = V_{CCOUT} \times 4.5\ k/(4.5\ k + R_{PU})$ and $V_{OH} = V_{CCOUT} \times R_{DW}/(4.5\ k + R_{DW})$.

D. If pullup resistors are needed, please refer to the TXS0108 or contact TI.

E. For detailed information, please refer to application note SCEA043.

GXY OR ZXY PACKAGE
(BOTTOM VIEW)

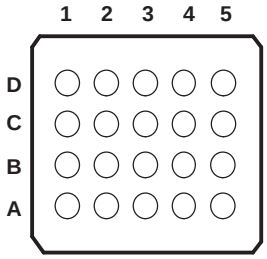

Pin Functions

PIN				I/O(1)	FUNCTION
NAME	PW, RGY NO.	DQS NO.	YZP NO.		
A1	1	1	A3	I/O	Input/output 1. Referenced to V_{CCA}.
V_{CCA}	2	5	C4	S	A-port supply voltage. 1.1 V ≤ V_{CCA} ≤ 3.6 V, V_{CCA} ≤ V_{CCB}.
A2	3	2	A4	I/O	Input/output 2. Referenced to V_{CCA}.
A3	4	3	B3	I/O	Input/output 3. Referenced to V_{CCA}.
A4	5	4	B4	I/O	Input/output 4. Referenced to V_{CCA}.
A5	6	7	C3	I/O	Input/output 5. Referenced to V_{CCA}.
A6	7	8	E4	I/O	Input/output 6. Referenced to V_{CCA}.
A7	8	9	D3	I/O	Input/output 7. Referenced to V_{CCA}.
A8	9	10	E3	I/O	Input/output 8. Referenced to V_{CCA}.
OE	10	6	D4	I	Output enable. Pull OE low to place all outputs in 3-state mode. Referenced to V_{CCA}.
GND	11	15	D1	S	Ground
B8	12	11	E2	I/O	Input/output 8. Referenced to V_{CCB}.
B7	13	12	D2	I/O	Input/output 7. Referenced to V_{CCB}.
B6	14	13	E1	I/O	Input/output 6. Referenced to V_{CCB}.
B5	15	14	C2	I/O	Input/output 5. Referenced to V_{CCB}.

(1) I = input, O = output, I/O = input and output, S = power supply

Copyright © 2006–2014, Texas Instruments Incorporated

Pin Functions (continued)

PIN				I/O[1]	FUNCTION
NAME	PW, RGY NO.	DQS NO.	YZP NO.		
B4	16	17	B1	I/O	Input/output 4. Referenced to V_{CCB}.
B3	17	18	B2	I/O	Input/output 3. Referenced to V_{CCB}.
B2	18	19	A1	I/O	Input/output 2. Referenced to V_{CCB}.
V_{CCB}	19	16	C1	S	B-port supply voltage. 1.65 V ≤ V_{CCB} ≤ 5.5 V.
B1	20	20	A2	I/O	Input/output 1. Referenced to V_{CCB}.
Thermal Pad	—			—	For the RGY package, the exposed center thermal pad must be connected to ground.

Pin Assignments (20-Ball GXY/ZXY Package)

	1	2	3	4	5
D	V_{CCB}	B2	B4	B6	B8
C	B1	B3	B5	B7	GND
B	A1	A3	A5	A7	OE
A	V_{CCA}	A2	A4	A6	A8

Copyright © 2006–2014, Texas Instruments Incorporated

6 Specifications

6.1 Absolute Maximum Ratings(1)

over operating free-air temperature range (unless otherwise noted)

			MIN	MAX	UNIT
V_{CCA}	Supply voltage range		–0.5	4.6	V
V_{CCB}	Supply voltage range		–0.5	6.5	V
V_I	Input voltage range(2)		–0.5	6.5	V
V_O	Voltage range applied to any output in the high-impedance or power-off state(2)		–0.5	6.5	V
V_O	Voltage range applied to any output in the high or low state(2) (3)	A inputs	–0.5	V_{CCA} + 0.5	V
		B inputs	–0.5	V_{CCB} + 0.5	
I_{IK}	Input clamp current	V_I < 0		–50	mA
I_{OK}	Output clamp current	V_O < 0		–50	mA
I_O	Continuous output current			±50	mA
	Continuous current through V_{CCA}, V_{CCB}, or GND			±100	mA

(1) Stresses beyond those listed under *Absolute Maximum Ratings* may cause permanent damage to the device. These are stress ratings only, and functional operation of the device at these or any other conditions beyond those indicated under *Recommended Operating Conditions* is not implied. Exposure to absolute-maximum-rated conditions for extended periods may affect device reliability.
(2) The input and output negative-voltage ratings may be exceeded if the input and output current ratings are observed.
(3) The value of V_{CCA} and V_{CCB} are provided in the recommended operating conditions table.

6.2 Handling Ratings

			MIN	MAX	UNIT
T_{stg}	Storage temperature range		–65	150	°C
$V_{(ESD)}$	Electrostatic discharge	Human body model (HBM), per ANSI/ESDA/JEDEC JS-001, all pins(1), A Port		2	kV
		Human body model (HBM), per ANSI/ESDA/JEDEC JS-001, all pins(1), B Port	–15	15	
		Charged device model (CDM), per JEDEC specification JESD22-C101, all pins(2), A Port		1	
		Charged device model (CDM), per JEDEC specification JESD22-C101, all pins(2), A Port (YZP Package only)	–8	8	
		Charged device model (CDM), per JEDEC specification JESD22-C101, all pins(2), B Port		1	

(1) JEDEC document JEP155 states that 500-V HBM allows safe manufacturing with a standard ESD control process.
(2) JEDEC document JEP157 states that 250-V CDM allows safe manufacturing with a standard ESD control process.

6.3 Recommended Operating Conditions

over operating free-air temperature range (unless otherwise noted)(1) (2)

			V_{CCA}	V_{CCB}	MIN	MAX	UNIT
V_{CCA}	Supply voltage				1.2	3.6	V
V_{CCB}					1.65	5.5	
V_{IH}	High-level input voltage	Data inputs	1.2 V to 3.6 V	1.65 V to 5.5 V	V_{CCI} x 0.65(3)	V_{CCI}	V
		OE			V_{CCA} x 0.65	5.5	
V_{IL}	Low-level input voltage	Data inputs	1.2 V to 5.5 V	1.65 V to 5.5 V	0	V_{CCI} x 0.35(3)	V
		OE	1.2 V to 3.6 V		0	V_{CCA} x 0.35	
Δt/Δv	Input transition rise or fall rate	A-port inputs	1.2 V to 3.6 V	1.65 V to 5.5 V		40	ns/V
		B-port inputs	1.2 V to 3.6 V	1.65 V to 3.6 V		40	
				4.5 V to 5.5 V		30	
T_A	Operating free-air temperature				–40	85	°C

(1) The A and B sides of an unused data I/O pair must be held in the same state, i.e., both at V_{CCI} or both at GND.
(2) V_{CCA} must be less than or equal to V_{CCB} and must not exceed 3.6 V.
(3) V_{CCI} is the supply voltage associated with the input port.

Copyright © 2006–2014, Texas Instruments Incorporated

6.4 Thermal Information

THERMAL METRIC[1]		TXB0108						UNIT
		PW	RGY	DQS	YZP	GXY	ZXY	
		20 PINS						
$R_{\theta JA}$	Junction-to-ambient thermal resistance	101.8	35.3	108.5	66.2	156.7	156.7	°C/W
$R_{\theta JC(top)}$	Junction-to-case (top) thermal resistance	35.5	42.1	32.3	0.4	39.9	39.9	
$R_{\theta JB}$	Junction-to-board thermal resistance	52.8	11.1	42.4	52.0	85.9	85.9	
ψ_{JT}	Junction-to-top characterization parameter	2.2	0.7	0.7	1.5	1.1	1.1	
ψ_{JB}	Junction-to-board characterization parameter	52.2	11.2	42	51.9	85.4	85.4	
$R_{\theta JC(bot)}$	Junction-to-case (bottom) thermal resistance	–	3.8	–	–	–	–	

(1) For more information about traditional and new thermal metrics, see the *IC Package Thermal Metrics* application report, SPRA953.

6.5 Electrical Characteristics

over recommended operating free-air temperature range (unless otherwise noted)[1][2]

PARAMETER		TEST CONDITIONS	V_{CCA}	V_{CCB}	T_A = 25°C			–40°C to 85°C		UNIT
					MIN	TYP	MAX	MIN	MAX	
V_{OHA}		I_{OH} = –20 µA	1.2 V			1.1				V
			1.4 V to 3.6 V					V_{CCA} – 0.4		
V_{OLA}		I_{OL} = 20 µA	1.2 V			0.3				V
			1.4 V to 3.6 V						0.4	
V_{OHB}		I_{OH} = –20 µA		1.65 V to 5.5 V				V_{CCB} – 0.4		V
V_{OLB}		I_{OL} = 20 µA		1.65 V to 5.5 V					0.4	V
I_I	OE		1.2 V to 3.6 V	1.65 V to 5.5 V			±1		±2	µA
I_{off}	A port		0 V	0 V to 5.5 V			±1		±2	µA
	B port		0 V to 3.6 V	0 V			±1		±2	
I_{OZ}	A or B port	OE = GND	1.2 V to 3.6 V	1.65 V to 5.5 V			±1		±2	µA
I_{CCA}		V_I = V_{CCI} or GND, I_O = 0	1.2 V	1.65 V to 5.5 V		0.06				µA
			1.4 V to 3.6 V						5	
			3.6 V	0 V					2	
			0 V	5.5 V					–2	
I_{CCB}		V_I = V_{CCI} or GND, I_O = 0	1.2 V	1.65 V to 5.5 V		3.4				µA
			1.4 V to 3.6 V						5	
			3.6 V	0 V					–2	
			0 V	5.5 V					2	
I_{CCA} + I_{CCB}		V_I = V_{CCI} or GND, I_O = 0	1.2 V	1.65 V to 5.5 V		3.5				µA
			1.4 V to 3.6 V						10	
I_{CCZA}		V_I = V_{CCI} or GND, I_O = 0, OE = GND	1.2 V	1.65 V to 5.5 V		0.05				µA
			1.4 V to 3.6 V						5	
I_{CCZB}		V_I = V_{CCI} or GND, I_O = 0, OE = GND	1.2 V	1.65 V to 5.5 V		3.3				µA
			1.4 V to 3.6 V						5	
C_I	OE		1.2 V to 3.6 V	1.65 V to 5.5 V		5			5.5	pF
C_{io}	A port		1.2 V to 3.6 V	1.65 V to 5.5 V		5			6.5	pF
	B port					8			10	

(1) V_{CCI} is the supply voltage associated with the input port.
(2) V_{CCO} is the supply voltage associated with the output port.

Copyright © 2006–2014, Texas Instruments Incorporated

6.6 Timing Requirements: V_{CCA} = 1.2 V

T_A = 25°C, V_{CCA} = 1.2 V

			V_{CCB} = 1.8 V	V_{CCB} = 2.5 V	V_{CCB} = 3.3 V	V_{CCB} = 5 V	UNIT
			TYP	TYP	TYP	TYP	
	Data rate		20	20	20	20	Mbps
t_w	Pulse duration	Data inputs	50	50	50	50	ns

6.7 Timing Requirements: V_{CCA} = 1.5 V ± 0.1 V

over recommended operating free-air temperature range, V_{CCA} = 1.5 V ± 0.1 V (unless otherwise noted)

			V_{CCB} = 1.8 V ± 0.15 V		V_{CCB} = 2.5 V ± 0.2 V		V_{CCB} = 3.3 V ± 0.3 V		V_{CCB} = 5 V ± 0.5 V		UNIT
			MIN	MAX	MIN	MAX	MIN	MAX	MIN	MAX	
	Data rate			50		50		50		50	Mbps
t_w	Pulse duration	Data inputs	20		20		20		20		ns

6.8 Timing Requirements: V_{CCA} = 1.8 V ± 0.15 V

over recommended operating free-air temperature range, V_{CCA} = 1.8 V ± 0.15 V (unless otherwise noted)

			V_{CCB} = 1.8 V ± 0.15 V		V_{CCB} = 2.5 V ± 0.2 V		V_{CCB} = 3.3 V ± 0.3 V		V_{CCB} = 5 V ± 0.5 V		UNIT
			MIN	MAX	MIN	MAX	MIN	MAX	MIN	MAX	
	Data rate			52		60		60		60	Mbps
t_w	Pulse duration	Data inputs	19		17		17		17		ns

6.9 Timing Requirements: V_{CCA} = 2.5 V ± 0.2 V

over recommended operating free-air temperature range, V_{CCA} = 2.5 V ± 0.2 V (unless otherwise noted)

			V_{CCB} = 2.5 V ± 0.2 V		V_{CCB} = 3.3 V ± 0.3 V		V_{CCB} = 5 V ± 0.5 V		UNIT
			MIN	MAX	MIN	MAX	MIN	MAX	
	Data rate			70		100		100	Mbps
t_w	Pulse duration	Data inputs	14		10		10		ns

6.10 Timing Requirements: V_{CCA} = 3.3 V ± 0.3 V

over recommended operating free-air temperature range, V_{CCA} = 3.3 V ± 0.3 V (unless otherwise noted)

			V_{CCB} = 3.3 V ± 0.3 V		V_{CCB} = 5 V ± 0.5 V		UNIT
			MIN	MAX	MIN	MAX	
	Data rate			100		100	Mbps
t_w	Pulse duration	Data inputs	10		10		ns

6.11 Switching Characteristics: V_{CCA} = 1.2 V

T_A = 25°C, V_{CCA} = 1.2 V

PARAMETER	FROM (INPUT)	TO (OUTPUT)	V_{CCB} = 1.8 V	V_{CCB} = 2.5 V	V_{CCB} = 3.3 V	V_{CCB} = 5 V	UNIT
			TYP	TYP	TYP	TYP	
t_{pd}	A	B	9.5	7.9	7.6	8.5	ns
	B	A	9.2	8.8	8.4	8	
t_{en}	OE	A	1	1	1	1	µs
		B	1	1	1	1	
t_{dis}	OE	A	20	17	17	18	ns
		B	20	16	15	15	
t_{rA}, t_{fA}	A-port rise and fall times		4.1	4.4	4.1	3.9	ns

Copyright © 2006–2014, Texas Instruments Incorporated

Switching Characteristics: V_{CCA} = 1.2 V (continued)

T_A = 25°C, V_{CCA} = 1.2 V

PARAMETER	FROM (INPUT)	TO (OUTPUT)	V_{CCB} = 1.8 V	V_{CCB} = 2.5 V	V_{CCB} = 3.3 V	V_{CCB} = 5 V	UNIT
			TYP	TYP	TYP	TYP	
t_{rB}, t_{fB}	B-port rise and fall times		5	5	5.1	5.1	ns
$t_{SK(O)}$	Channel-to-channel skew		2.4	1.7	1.9	7	ns
Max data rate			20	20	20	20	Mbps

6.12 Switching Characteristics: V_{CCA} = 1.5 V ± 0.1 V

over recommended operating free-air temperature range, V_{CCA} = 1.5 V ± 0.1 V (unless otherwise noted)

PARAMETER	FROM (INPUT)	TO (OUTPUT)	V_{CCB} = 1.8 V ± 0.15 V		V_{CCB} = 2.5 V ± 0.2 V		V_{CCB} = 3.3 V ± 0.3 V		V_{CCB} = 5 V ± 0.5 V		UNIT
			MIN	MAX	MIN	MAX	MIN	MAX	MIN	MAX	
t_{pd}	A	B	1.4	12.9	1.2	10.1	1.1	10	0.8	9.9	ns
	B	A	0.9	14.2	0.7	12	0.4	11.7	0.3	13.7	
t_{en}	OE	A		1		1		1		1	µs
		B		1		1		1		1	
t_{dis}	OE	A	6.6	33	6.4	25.3	6.1	23.1	5.9	24.6	ns
		B	6.6	35.6	5.8	25.6	5.5	22.1	5.6	20.6	
t_{rA}, t_{fA}	A-port rise and fall times		0.8	6.5	0.8	6.3	0.8	6.3	0.8	6.3	ns
t_{rB}, t_{fB}	B-port rise and fall times		1	7.3	0.7	4.9	0.7	4.6	0.6	4.6	ns
$t_{SK(O)}$	Channel-to-channel skew			2.6		1.9		1.6		1.3	ns
Max data rate			50		50		50		50		Mbps

6.13 Switching Characteristics: V_{CCA} = 1.8 V ± 0.15 V

over recommended operating free-air temperature range, V_{CCA} = 1.8 V ± 0.15 V (unless otherwise noted)

PARAMETER	FROM (INPUT)	TO (OUTPUT)	V_{CCB} = 1.8 V ± 0.15 V		V_{CCB} = 2.5 V ± 0.2 V		V_{CCB} = 3.3 V ± 0.3 V		V_{CCB} = 5 V ± 0.5 V		UNIT
			MIN	MAX	MIN	MAX	MIN	MAX	MIN	MAX	
t_{pd}	A	B	1.6	11	1.4	7.7	1.3	6.8	1.2	6.5	ns
	B	A	1.5	12	1.2	8.4	0.8	7.6	0.5	7.1	
t_{en}	OE	A		1		1		1		1	µs
		B		1		1		1		1	
t_{dis}	OE	A	5.9	26.7	5.6	21.6	5.4	18.9	4.8	18.7	ns
		B	6.1	33.9	5.2	23.7	5	19.9	5	17.6	
t_{rA}, t_{fA}	A-port rise and fall times		0.7	5.1	0.7	5	1	5	0.7	5	ns
t_{rB}, t_{fB}	B-port rise and fall times		1	7.3	0.7	5	0.7	3.9	0.6	3.8	ns
$t_{SK(O)}$	Channel-to-channel skew			0.8		0.7		0.6		0.6	ns
Max data rate			52		60		60		60		Mbps

6.14 Switching Characteristics: V_{CCA} = 2.5 V ± 0.2 V

over recommended operating free-air temperature range, V_{CCA} = 2.5 V ± 0.2 V (unless otherwise noted)

PARAMETER	FROM (INPUT)	TO (OUTPUT)	V_{CCB} = 2.5 V ± 0.2 V		V_{CCB} = 3.3 V ± 0.3 V		V_{CCB} = 5 V ± 0.5 V		UNIT
			MIN	MAX	MIN	MAX	MIN	MAX	
t_{pd}	A	B	1.1	6.4	1	5.3	0.9	4.7	ns
	B	A	1	7	0.6	5.6	0.3	4.4	

Copyright © 2006–2014, Texas Instruments Incorporated

Switching Characteristics: V_{CCA} = 2.5 V ± 0.2 V (continued)

over recommended operating free-air temperature range, V_{CCA} = 2.5 V ± 0.2 V (unless otherwise noted)

PARAMETER	FROM (INPUT)	TO (OUTPUT)	V_{CCB} = 2.5 V ± 0.2 V		V_{CCB} = 3.3 V ± 0.3 V		V_{CCB} = 5 V ± 0.5 V		UNIT
			MIN	MAX	MIN	MAX	MIN	MAX	
t_{en}	OE	A		1		1		1	µs
		B		1		1		1	
t_{dis}	OE	A	5	16.9	4.9	15	4.5	13.8	ns
		B	4.8	21.8	4.5	17.9	4.4	15.2	
t_{rA}, t_{fA}	A-port rise and fall times		0.8	3.6	0.6	3.6	0.5	3.5	ns
t_{rB}, t_{fB}	B-port rise and fall times		0.6	4.9	0.7	3.9	0.6	3.2	ns
$t_{SK(O)}$	Channel-to-channel skew			0.4		0.3		0.3	ns
Max data rate			70		100		100		Mbps

6.15 Switching Characteristics: V_{CCA} = 3.3 V ± 0.3 V

over recommended operating free-air temperature range, V_{CCA} = 3.3 V ± 0.3 V (unless otherwise noted)

PARAMETER	FROM (INPUT)	TO (OUTPUT)	V_{CCB} = 3.3 V ± 0.3 V		V_{CCB} = 5 V ± 0.5 V		UNIT
			MIN	MAX	MIN	MAX	
t_{pd}	A	B	0.9	4.9	0.8	4	ns
	B	A	0.5	5.4	0.2	4	
t_{en}	OE	A		1		1	µs
		B		1		1	
t_{dis}	OE	A	4.5	13.9	4.1	12.4	ns
		B	4.1	17.3	4	14.4	
t_{rA}, t_{fA}	A-port rise and fall times		0.5	3	0.5	3	ns
t_{rB}, t_{fB}	B-port rise and fall times		0.7	3.9	0.6	3.2	ns
$t_{SK(O)}$	Channel-to-channel skew			0.4		0.3	ns
Max data rate			100		100		Mbps

6.16 Operating Characteristics

T_A = 25°C

PARAMETER		TEST CONDITIONS	V_{CCA}							UNIT
			1.2 V	1.2 V	1.5 V	1.8 V	2.5 V	2.5 V	3.3 V	
			V_{CCB}							
			5 V	1.8 V	1.8 V	1.8 V	2.5 V	5 V	3.3 V to 5 V	
			TYP	TYP	TYP	TYP	TYP	TYP	TYP	
C_{pdA}	A-port input, B-port output	C_L = 0, f = 10 MHz, t_r = t_f = 1 ns, OE = V_{CCA} (outputs enabled)	9	8	7	7	7	7	8	pF
	B-port input, A-port output		12	11	11	11	11	11	11	
C_{pdB}	A-port input, B-port output		35	26	27	27	27	27	28	
	B-port input, A-port output		26	19	18	18	18	20	21	
C_{pdA}	A-port input, B-port output	C_L = 0, f = 10 MHz, t_r = t_f = 1 ns, OE = GND (outputs disabled)	0.01	0.01	0.01	0.01	0.01	0.01	0.01	pF
	B-port input, A-port output		0.01	0.01	0.01	0.01	0.01	0.01	0.01	
C_{pdB}	A-port input, B-port output		0.01	0.01	0.01	0.01	0.01	0.01	0.03	
	B-port input, A-port output		0.01	0.01	0.01	0.01	0.01	0.01	0.03	

Copyright © 2006–2014, Texas Instruments Incorporated

6.17 Typical Characteristics

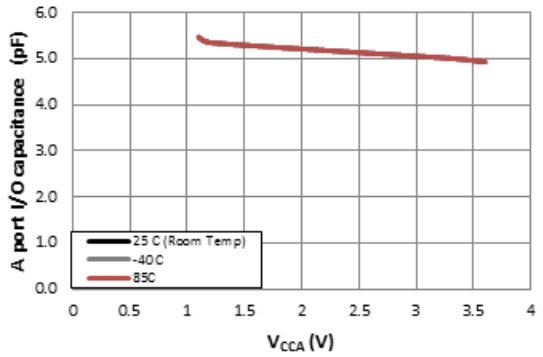

V_{CCB} = 3.3 V

Figure 1. Input Capacitance for OE Pin (C_I) vs Power Supply (V_{CCA})

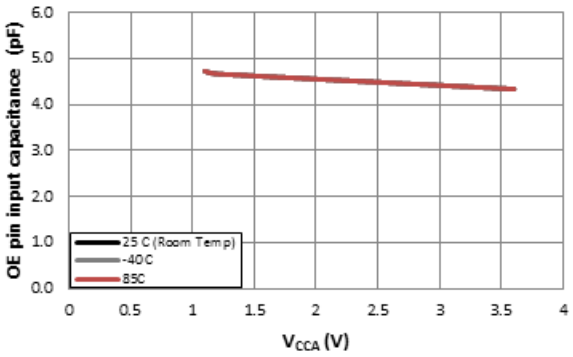

V_{CCB} = 3.3 V

Figure 2. Capacitance for A Port I/O Pins (C_{IO}) vs Power Supply (V_{CCA})

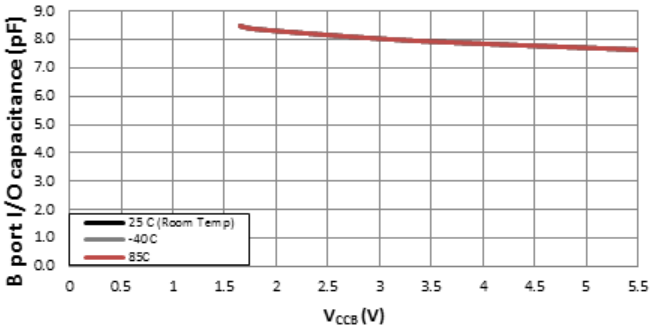

V_{CCA} = 1.8 V

Figure 3. Capacitance fpr B Port I/O Pins (C_{IO}) vs Power Supply (V_{CCB})

Copyright © 2006–2014, Texas Instruments Incorporated

7 Parameter Measurement Information

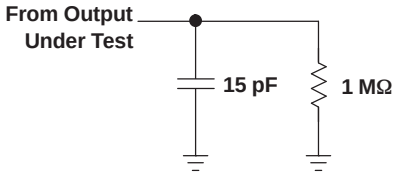

LOAD CIRCUIT FOR MAX DATA RATE, PULSE DURATION PROPAGATION DELAY OUTPUT RISE AND FALL TIME MEASUREMENT

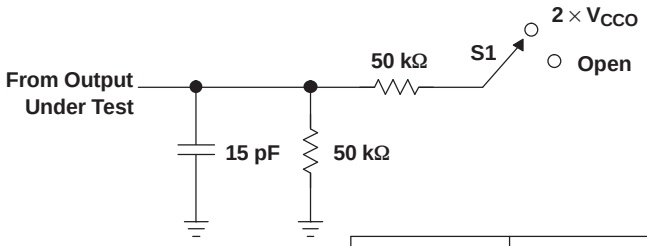

LOAD CIRCUIT FOR ENABLE/DISABLE TIME MEASUREMENT

TEST	S1
t_{PZL}/t_{PLZ} t_{PHZ}/t_{PZH}	$2 \times V_{CCO}$ Open

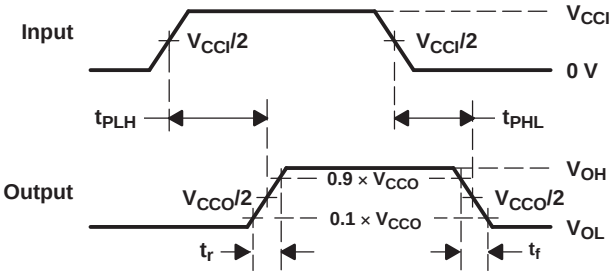

VOLTAGE WAVEFORMS PROPAGATION DELAY TIMES

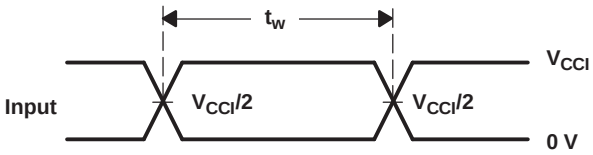

VOLTAGE WAVEFORMS PULSE DURATION

A. C_L includes probe and jig capacitance.
B. All input pulses are supplied by generators having the following characteristics: PRR ≤ 10 MHz, Z_O = 50 Ω, dv/dt ≥ 1 V/ns.
C. The outputs are measured one at a time, with one transition per measurement.
D. t_{PLH} and t_{PHL} are the same as t_{pd}.
E. V_{CCI} is the V_{CC} associated with the input port.
F. V_{CCO} is the V_{CC} associated with the output port.
G. All parameters and waveforms are not applicable to all devices.

Figure 4. Load Circuits and Voltage Waveforms

8 Detailed Description

8.1 Overview

The TXB0108 device is an 8-bit, directionless voltage-level translator specifically designed for translating logic voltage levels. The A port is able to accept I/O voltages ranging from 1.2 V to 3.6 V, while the B port can accept I/O voltages from 1.65 V to 5.5 V. The device is a buffered architecture with edge-rate accelerators (one-shots) to improve the overall data rate. This device can only translate push-pull CMOS logic outputs. If for open-drain signal translation, please refer to TI TXS010X products.

8.2 Functional Block Diagram

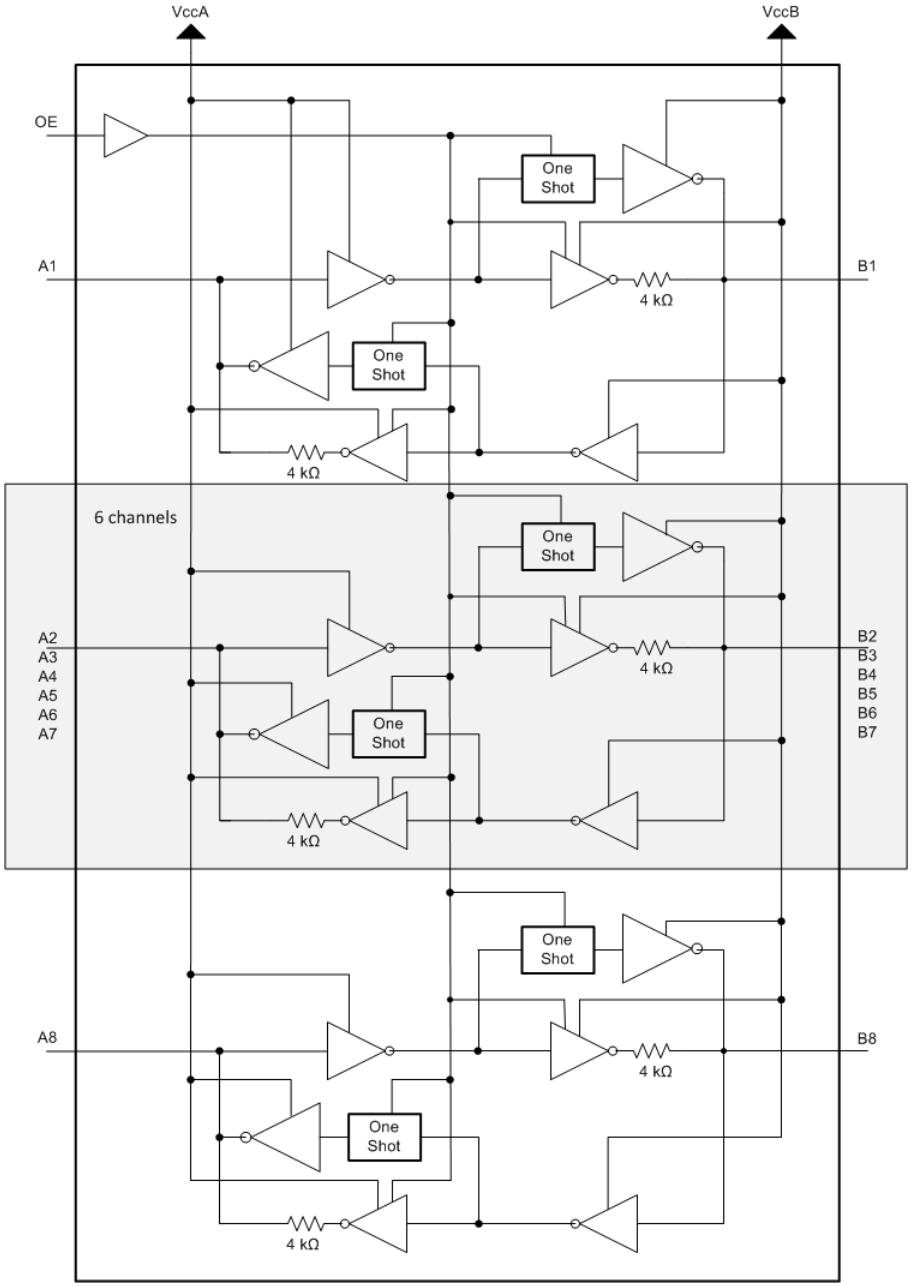

Copyright © 2006–2014, Texas Instruments Incorporated

8.3 Feature Description

8.3.1 Architecture

The TXB0108 architecture (see Figure 5) does not require a direction-control signal to control the direction of data flow from A to B or from B to A. In a dc state, the output drivers of the TXB0108 can maintain a high or low, but are designed to be weak so that they can be overdriven by an external driver when data on the bus starts flowing the opposite direction. The output one-shots detect rising or falling edges on the A or B ports. During a rising edge, the one-shot turns on the PMOS transistors (T1, T3) for a short duration, which speeds up the low-to-high transition. Similarly, during a falling edge, the one-shot turns on the NMOS transistors (T2, T4) for a short duration, which speeds up the high-to-low transition. The typical output impedance during output transition is 70 Ω at VCCO = 1.2 V to 1.8 V, 50 Ω at VCCO = 1.8 V to 3.3 V and 40 Ω at VCCO = 3.3 V to 5 V.

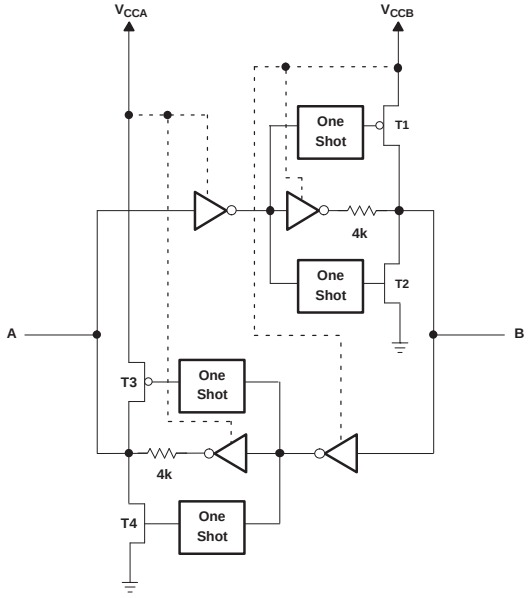

Figure 5. Architecture of TXB0108 I/O Cell

8.3.2 Input Driver Requirements

Typical I_{IN} vs V_{IN} characteristics of the TXB0108 are shown in Figure 6. For proper operation, the device driving the data I/Os of the TXB0108 must have drive strength of at least ±2 mA.

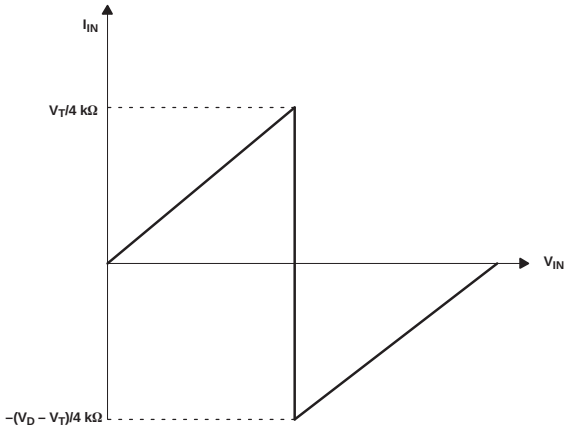

A. V_T is the input threshold voltage of the TXB0108 (typically $V_{CCI}/2$).
B. V_D is the supply voltage of the external driver.

Figure 6. Typical I_{IN} vs V_{IN} Curve

Copyright © 2006–2014, Texas Instruments Incorporated

Feature Description (continued)

8.3.3 Output Load Considerations

TI recommends careful PCB layout practices with short PCB trace lengths to avoid excessive capacitive loading and to ensure that proper O.S. triggering takes place. PCB signal trace-lengths should be kept short enough such that the round-trip delay of any reflection is less than the one-shot duration. This improves signal integrity by ensuring that any reflection sees a low impedance at the driver. The O.S. circuits have been designed to stay on for approximately 10 ns. The maximum capacitance of the lumped load that can be driven also depends directly on the one-shot duration. With very heavy capacitive loads, the one-shot can time-out before the signal is driven fully to the positive rail. The O.S. duration has been set to best optimize trade-offs between dynamic ICC, load driving capability, and maximum bit-rate considerations. Both PCB trace length and connectors add to the capacitance that the TXB0108 output sees, so it is recommended that this lumped-load capacitance be considered to avoid O.S. re-triggering, bus contention, output signal oscillations, or other adverse system-level affects.

8.3.4 Enable and Disable

The TXB0108 has an OE input that is used to disable the device by setting OE = low, which places all I/Os in the high-impedance (Hi-Z) state. The disable time (tdis) indicates the delay between when OE goes low and when the outputs actually get disabled (Hi-Z). The enable time (ten) indicates the amount of time the user must allow for the one-shot circuitry to become operational after the OE is high.

8.3.5 Pullup or Pulldown Resistors on I/O Lines

The TXB0108 is designed to drive capacitive loads of up to 70 pF. The output drivers of the TXB0108 have low dc drive strength. If pullup or pulldown resistors are connected externally to the data I/Os, their values must be kept higher than 50 kΩ to ensure that they do not contend with the output drivers of the TXB0108. For the same reason, the TXB0108 should not be used in applications such as I2C or 1-Wire where an open-drain driver is connected on the bidirectional data I/O. For these applications, use a device from the TI TXS01xx series of level translators.

8.4 Device Functional Modes

The TXB0108 device has two functional modes, enabled and disabled. To disable the device, set the OE input low, which places all I/Os in a high impedance state. Setting the OE input high will enable the device.

Copyright © 2006–2014, Texas Instruments Incorporated

9 Application and Implementation

NOTE

Information in the following applications sections is not part of the TI component specification, and TI does not warrant its accuracy or completeness. TI's customers are responsible for determining suitability of components for their purposes. Customers should validate and test their design implementation to confirm system functionality.

9.1 Application Information

The TXB0108 can be used in level-translation applications for interfacing devices or systems operating at different interface voltages with one another. It can only translate push-pull CMOS logic outputs. If for open-drain signal translation, please refer to TI TXS010X products. Any external pulldown or pullup resistors are recommended to be larger than 50kΩ.

9.2 Typical Application

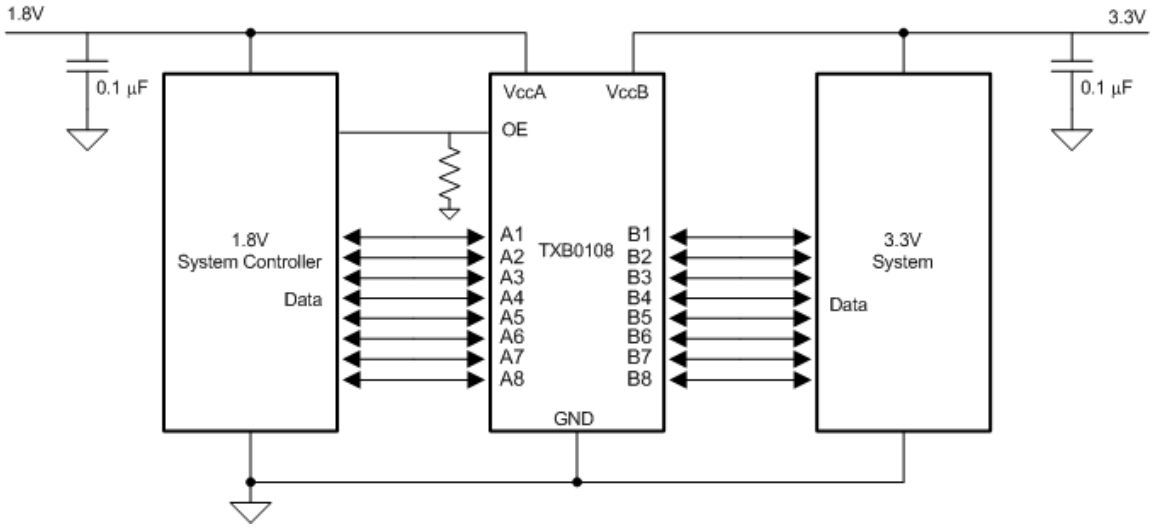

Figure 7. Typical Operating Circuit

9.2.1 Design Requirements

For this design example, use the parameters listed in Table 1. Make sure the VCCA ≤VCCB.

Table 1. Design Parameters

DESIGN PARAMETER	EXAMPLE VALUE
Input voltage range	1.2 V to 3.6 V
Output voltage range	1.65 V to 5.5 V

9.2.2 Detailed Design Procedure

To begin the design process, determine the following:

- Input voltage range
  - Use the supply voltage of the device that is driving the TXB0108 device to determine the input voltage range. For a valid logic high the value must exceed the VIH of the input port. For a valid logic low, the value must be less than the VIL of the input port.
- Output voltage range
  - Use the supply voltage of the device that the TXB0108 device is driving to determine the output voltage range.

Copyright © 2006–2014, Texas Instruments Incorporated

- Do not recommend having the external pullup or pulldown resistors. If mandatory, it is recommended the value should be larger than 50 kΩ.

• An external pulldown or pullup resistor decreases the output V_{OH} and V_{OL}. Use the below equations to draft estimate the V_{OH} and V_{OL} as a result of an external pulldown and pullup resistor.

$V_{OH} = V_{CCx} \times R_{PD} / (R_{PD} + 4.5\ k\Omega)$

$V_{OL} = V_{CCx} \times 4.5k\Omega / (R_{PU} + 4.5\ k\Omega)$

Where:

- V_{CCx} is the output port supply voltage on either VCCA or VCCB
- R_{PD} is the value of the external pull down resistor
- R_{PU} is the value of the external pull up resistor
- 4.5 kΩ is the counting the variation of the serial resistor 4 kΩ in the I/O line.

9.2.3 Application Curves

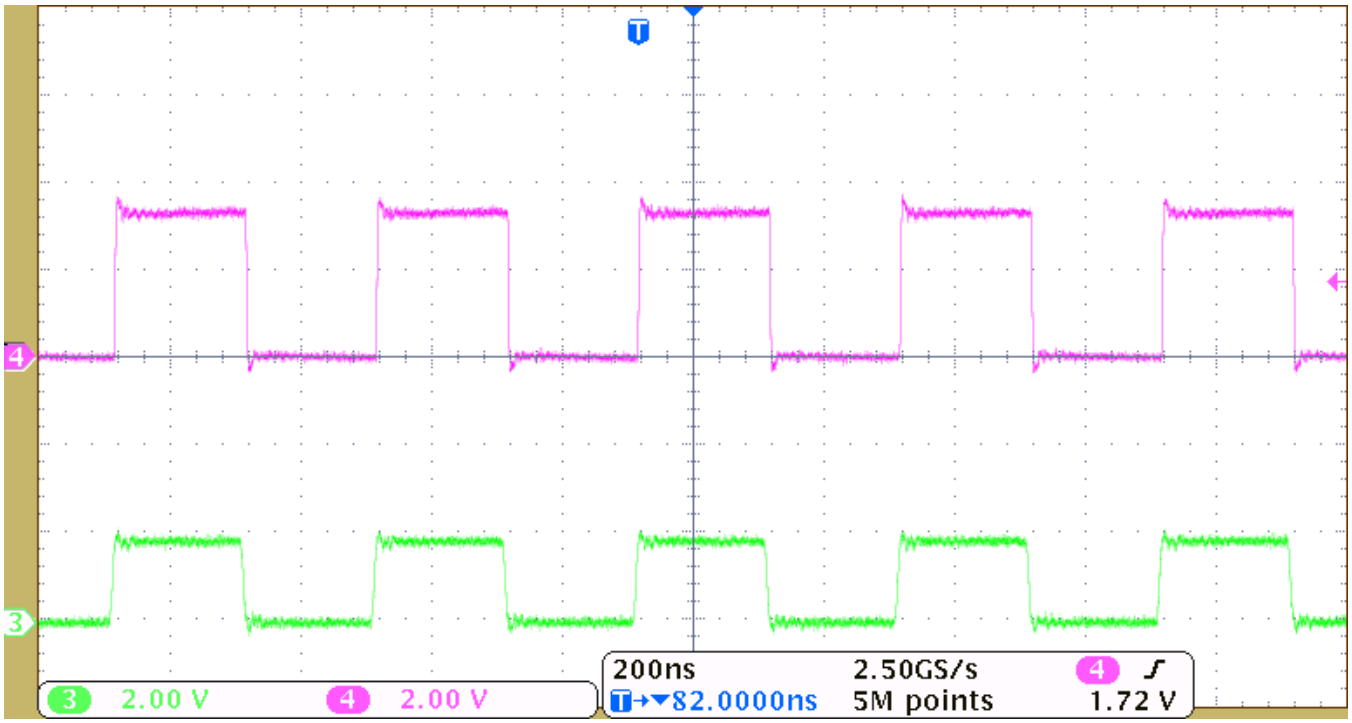

Figure 8. Level-Translation of a 2.5-MHz Signal

Copyright © 2006–2014, Texas Instruments Incorporated

10 Power Supply Recommendations

During operation, ensure that $V_{CCA} \leq V_{CCB}$ at all times. During power-up sequencing, $V_{CCA} \geq V_{CCB}$ does not damage the device, so any power supply can be ramped up first. The TXB0108 has circuitry that disables all output ports when either VCC is switched off ($V_{CCA/B}$ = 0 V).

The output-enable (OE) input circuit is designed so that it is supplied by V_{CCA} and when the (OE) input is low, all outputs are placed in the high-impedance state. To ensure the high-impedance state of the outputs during power-up or power-down, the OE input pin must be tied to GND through a pulldown resistor and must not be enabled until V_{CCA} and V_{CCB} are fully ramped and stable. The minimum value of the pulldown resistor to ground is determined by the current-sourcing capability of the driver.

11 Layout

11.1 Layout Guidelines

To ensure reliability of the device, the following common printed-circuit board layout guidelines is recommended.

- Bypass capacitors should be used on power supplies and should be placed as close as possible to the V_{CCA}, V_{CCB} pin and GND pin.
- Short trace lengths should be used to avoid excessive loading.
- PCB signal trace-lengths must be kept short enough so that the round-trip delay of any reflection is less than the one-shot duration, approximately 10 ns, ensuring that any reflection encounters low impedance at the source driver.

11.2 Layout Example

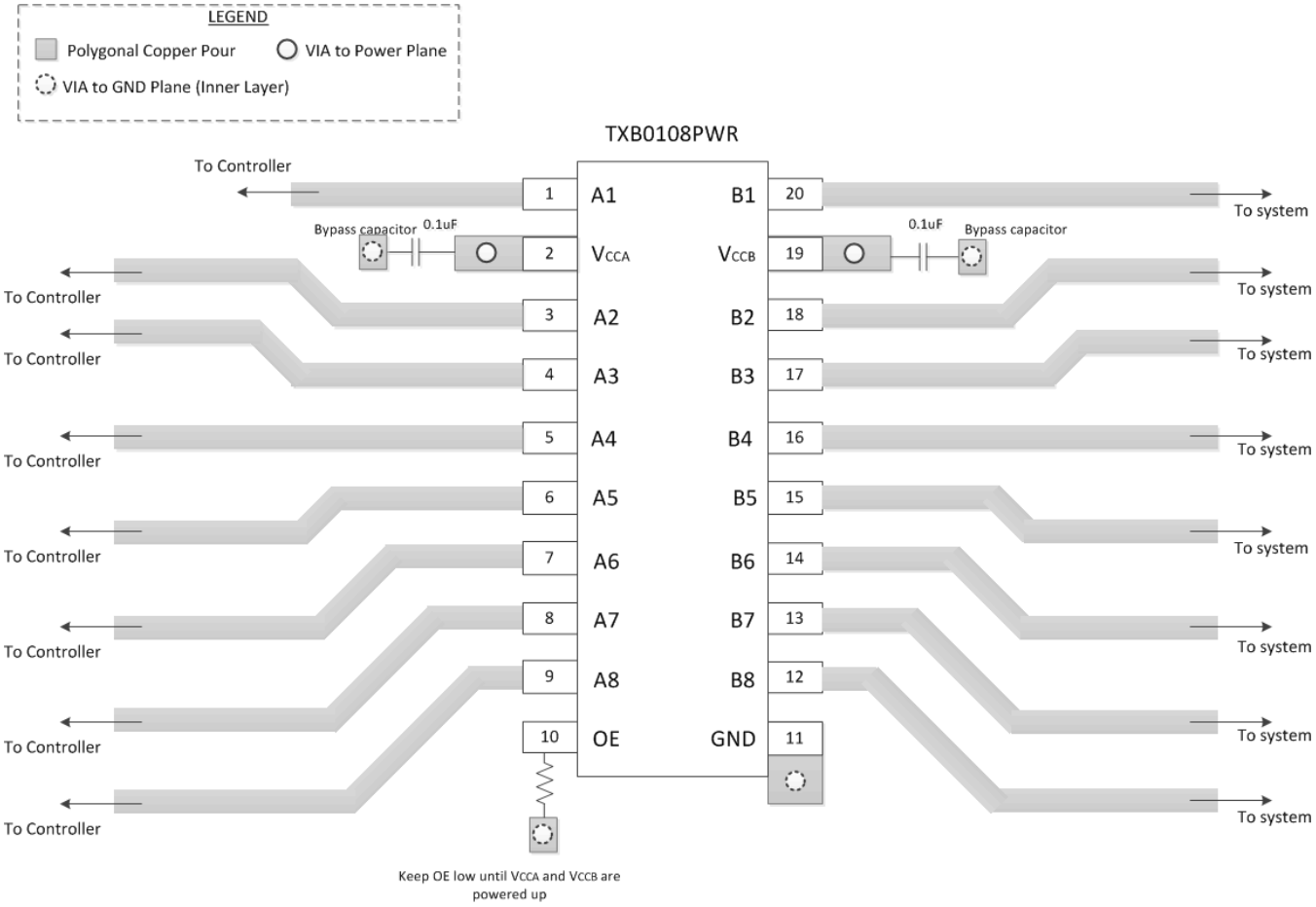

12 Device and Documentation Support

12.1 Trademarks

All trademarks are the property of their respective owners.

12.2 Electrostatic Discharge Caution



These devices have limited built-in ESD protection. The leads should be shorted together or the device placed in conductive foam during storage or handling to prevent electrostatic damage to the MOS gates.

12.3 Glossary

SLYZ022 — *TI Glossary*.

This glossary lists and explains terms, acronyms, and definitions.

13 Mechanical, Packaging, and Orderable Information

The following pages include mechanical, packaging, and orderable information. This information is the most current data available for the designated devices. This data is subject to change without notice and revision of this document. For browser-based versions of this data sheet, refer to the left-hand navigation.

Copyright © 2006–2014, Texas Instruments Incorporated

PACKAGING INFORMATION

Orderable Device	Status (1)	Package Type	Package Drawing	Pins	Package Qty	Eco Plan (2)	Lead/Ball Finish (6)	MSL Peak Temp (3)	Op Temp (°C)	Device Marking (4/5)	Samples
TXB0108DQSR	ACTIVE	USON	DQS	20	3000	Green (RoHS & no Sb/Br)	CU NIPDAUAG	Level-1-260C-UNLIM	-40 to 85	5MR 5MH	Samples
TXB0108PWR	ACTIVE	TSSOP	PW	20	2000	Green (RoHS & no Sb/Br)	CU NIPDAU	Level-1-260C-UNLIM	-40 to 85	YE08	Samples
TXB0108PWRG4	ACTIVE	TSSOP	PW	20	2000	Green (RoHS & no Sb/Br)	CU NIPDAU	Level-1-260C-UNLIM	-40 to 85	YE08	Samples
TXB0108RGYR	ACTIVE	VQFN	RGY	20	3000	Green (RoHS & no Sb/Br)	CU NIPDAU	Level-2-260C-1 YEAR	-40 to 85	YE08	Samples
TXB0108RGYRG4	ACTIVE	VQFN	RGY	20	3000	Green (RoHS & no Sb/Br)	CU NIPDAU	Level-2-260C-1 YEAR	-40 to 85	YE08	Samples
TXB0108YZPR	ACTIVE	DSBGA	YZP	20	3000	Green (RoHS & no Sb/Br)	SNAGCU	Level-1-260C-UNLIM	-40 to 85	5M	Samples
TXB0108ZXYR	ACTIVE	BGA MICROSTAR JUNIOR	ZXY	20	2500	Green (RoHS & no Sb/Br)	SNAGCU	Level-1-260C-UNLIM	-40 to 85	YE08	Samples

(1) The marketing status values are defined as follows:
ACTIVE: Product device recommended for new designs.
LIFEBUY: TI has announced that the device will be discontinued, and a lifetime-buy period is in effect.
NRND: Not recommended for new designs. Device is in production to support existing customers, but TI does not recommend using this part in a new design.
PREVIEW: Device has been announced but is not in production. Samples may or may not be available.
OBSOLETE: TI has discontinued the production of the device.

(2) Eco Plan - The planned eco-friendly classification: Pb-Free (RoHS), Pb-Free (RoHS Exempt), or Green (RoHS & no Sb/Br) - please check http://www.ti.com/productcontent for the latest availability information and additional product content details.
TBD: The Pb-Free/Green conversion plan has not been defined.
Pb-Free (RoHS): TI's terms "Lead-Free" or "Pb-Free" mean semiconductor products that are compatible with the current RoHS requirements for all 6 substances, including the requirement that lead not exceed 0.1% by weight in homogeneous materials. Where designed to be soldered at high temperatures, TI Pb-Free products are suitable for use in specified lead-free processes.
Pb-Free (RoHS Exempt): This component has a RoHS exemption for either 1) lead-based flip-chip solder bumps used between the die and package, or 2) lead-based die adhesive used between the die and leadframe. The component is otherwise considered Pb-Free (RoHS compatible) as defined above.
Green (RoHS & no Sb/Br): TI defines "Green" to mean Pb-Free (RoHS compatible), and free of Bromine (Br) and Antimony (Sb) based flame retardants (Br or Sb do not exceed 0.1% by weight in homogeneous material)

(3) MSL, Peak Temp. - The Moisture Sensitivity Level rating according to the JEDEC industry standard classifications, and peak solder temperature.

(4) There may be additional marking, which relates to the logo, the lot trace code information, or the environmental category on the device.

(5) Multiple Device Markings will be inside parentheses. Only one Device Marking contained in parentheses and separated by a "~" will appear on a device. If a line is indented then it is a continuation of the previous line and the two combined represent the entire Device Marking for that device.

(6) Lead/Ball Finish - Orderable Devices may have multiple material finish options. Finish options are separated by a vertical ruled line. Lead/Ball Finish values may wrap to two lines if the finish value exceeds the maximum column width.

Important Information and Disclaimer: The information provided on this page represents TI's knowledge and belief as of the date that it is provided. TI bases its knowledge and belief on information provided by third parties, and makes no representation or warranty as to the accuracy of such information. Efforts are underway to better integrate information from third parties. TI has taken and continues to take reasonable steps to provide representative and accurate information but may not have conducted destructive testing or chemical analysis on incoming materials and chemicals. TI and TI suppliers consider certain information to be proprietary, and thus CAS numbers and other limited information may not be available for release.

In no event shall TI's liability arising out of such information exceed the total purchase price of the TI part(s) at issue in this document sold by TI to Customer on an annual basis.

TAPE AND REEL INFORMATION

REEL DIMENSIONS

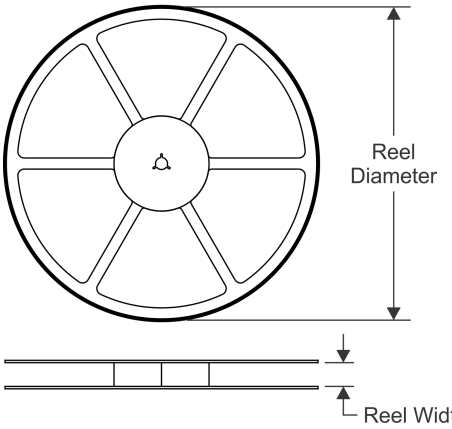

TAPE DIMENSIONS

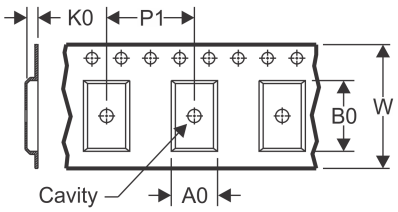

A0	Dimension designed to accommodate the component width
B0	Dimension designed to accommodate the component length
K0	Dimension designed to accommodate the component thickness
W	Overall width of the carrier tape
P1	Pitch between successive cavity centers

QUADRANT ASSIGNMENTS FOR PIN 1 ORIENTATION IN TAPE

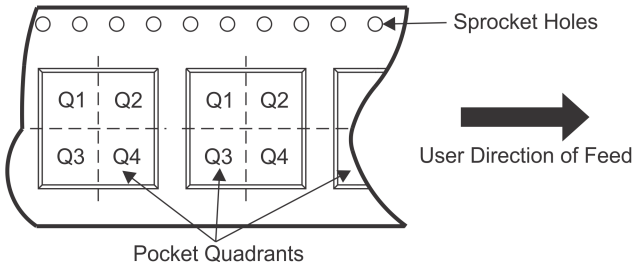

*All dimensions are nominal

Device	Package Type	Package Drawing	Pins	SPQ	Reel Diameter (mm)	Reel Width W1 (mm)	A0 (mm)	B0 (mm)	K0 (mm)	P1 (mm)	W (mm)	Pin1 Quadrant
TXB0108DQSR	USON	DQS	20	3000	177.8	12.4	2.21	4.22	0.81	4.0	12.0	Q1
TXB0108PWR	TSSOP	PW	20	2000	330.0	16.4	6.95	7.1	1.6	8.0	16.0	Q1
TXB0108RGYR	VQFN	RGY	20	3000	330.0	12.4	3.8	4.8	1.6	8.0	12.0	Q1
TXB0108RGYR	VQFN	RGY	20	3000	330.0	12.4	3.8	4.8	1.6	8.0	12.0	Q1
TXB0108YZPR	DSBGA	YZP	20	3000	180.0	8.4	1.99	2.49	0.56	4.0	8.0	Q1
TXB0108ZXYR	BGA MICROSTAR JUNIOR	ZXY	20	2500	330.0	12.4	2.8	3.3	1.0	4.0	12.0	Q2

TAPE AND REEL BOX DIMENSIONS

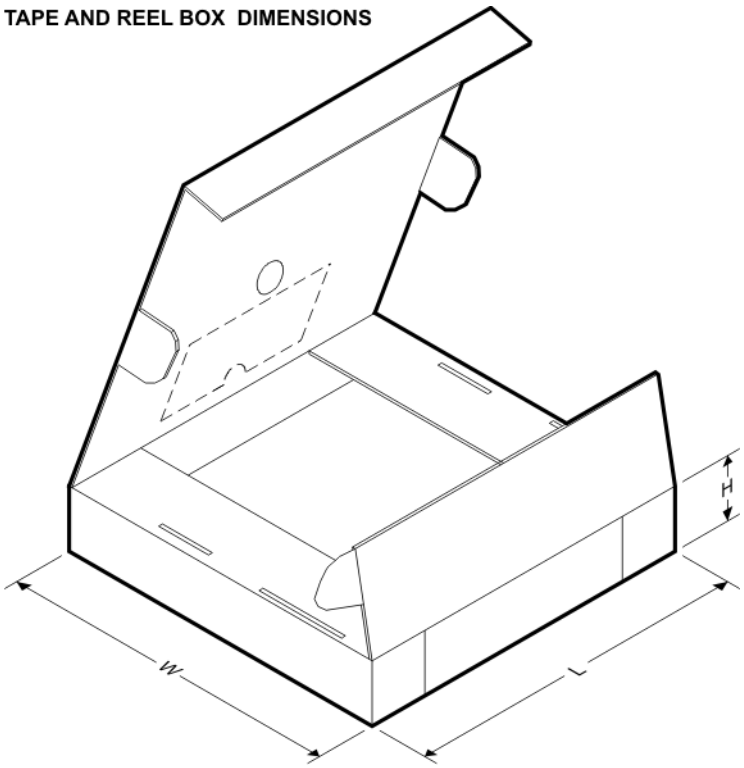

*All dimensions are nominal

Device	Package Type	Package Drawing	Pins	SPQ	Length (mm)	Width (mm)	Height (mm)
TXB0108DQSR	USON	DQS	20	3000	202.0	201.0	28.0
TXB0108PWR	TSSOP	PW	20	2000	367.0	367.0	38.0
TXB0108RGYR	VQFN	RGY	20	3000	355.0	350.0	50.0
TXB0108RGYR	VQFN	RGY	20	3000	367.0	367.0	35.0
TXB0108YZPR	DSBGA	YZP	20	3000	182.0	182.0	20.0
TXB0108ZXYR	BGA MICROSTAR JUNIOR	ZXY	20	2500	338.1	338.1	20.6

ZXY (S–PBGA–N20) PLASTIC BALL GRID ARRAY

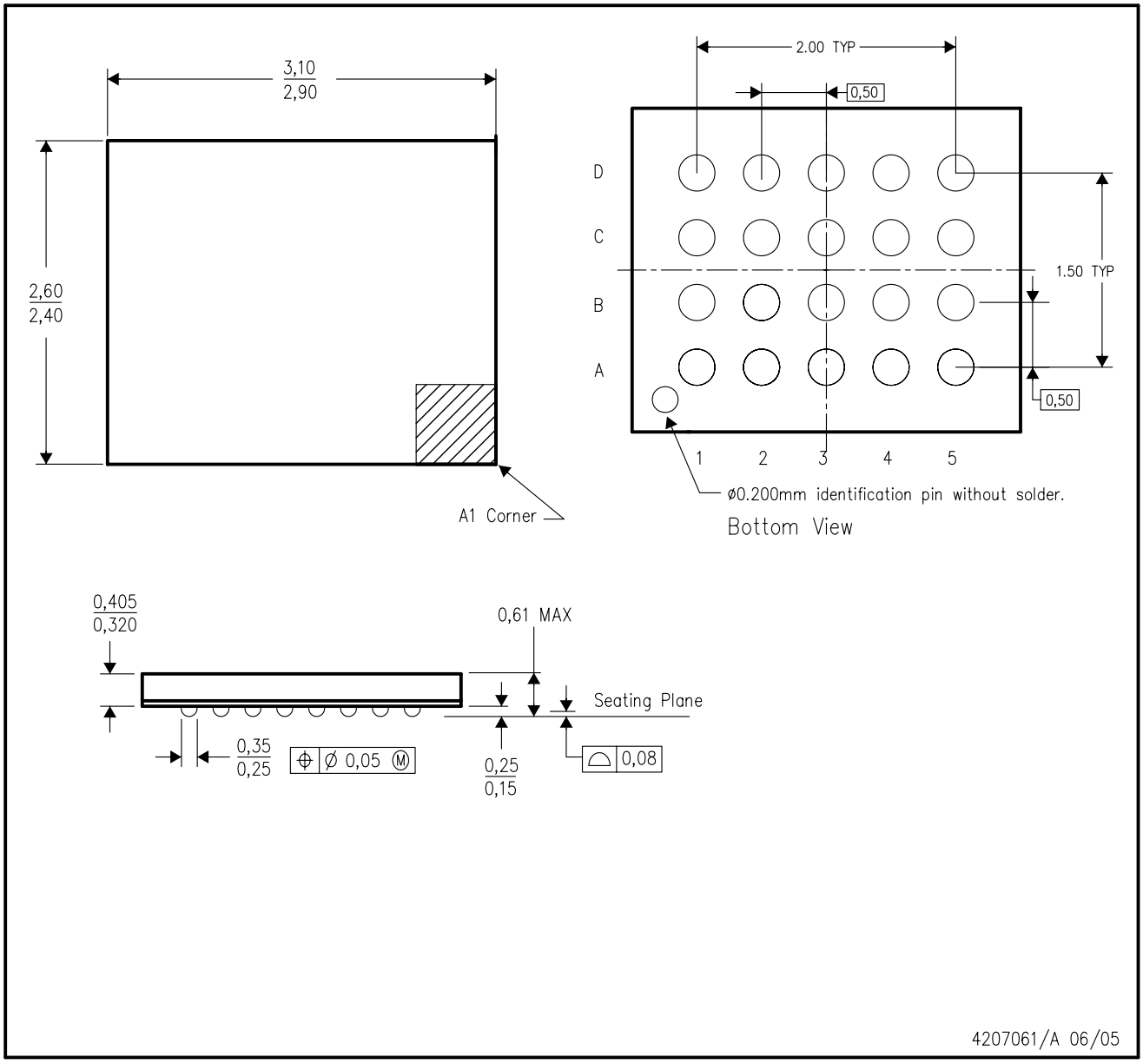

NOTES:
A. All linear dimensions are in millimeters.
B. This drawing is subject to change without notice.
C. This package is a lead–free solder ball design.

PW (R–PDSO–G20) PLASTIC SMALL OUTLINE

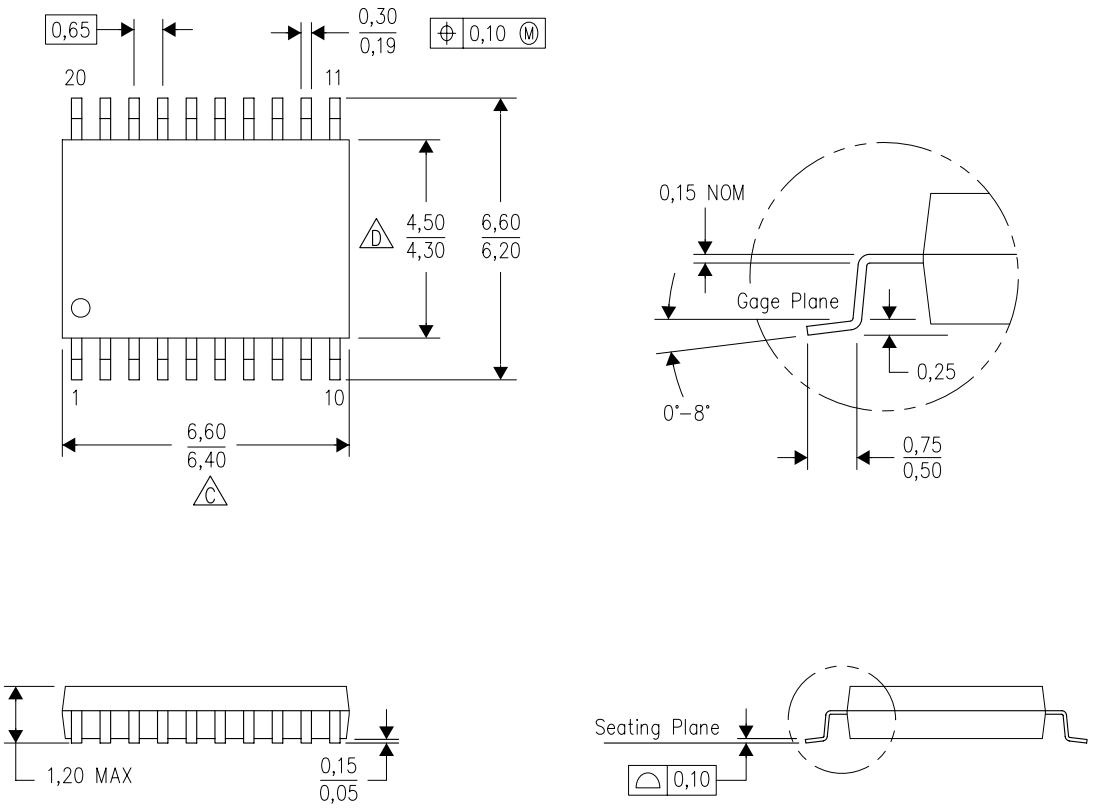

4040064–5/G 02/11

NOTES:
A. All linear dimensions are in millimeters. Dimensioning and tolerancing per ASME Y14.5M–1994.
B. This drawing is subject to change without notice.
C. Body length does not include mold flash, protrusions, or gate burrs. Mold flash, protrusions, or gate burrs shall not exceed 0,15 each side.
D. Body width does not include interlead flash. Interlead flash shall not exceed 0,25 each side.
E. Falls within JEDEC MO–153

PW (R–PDSO–G20) PLASTIC SMALL OUTLINE

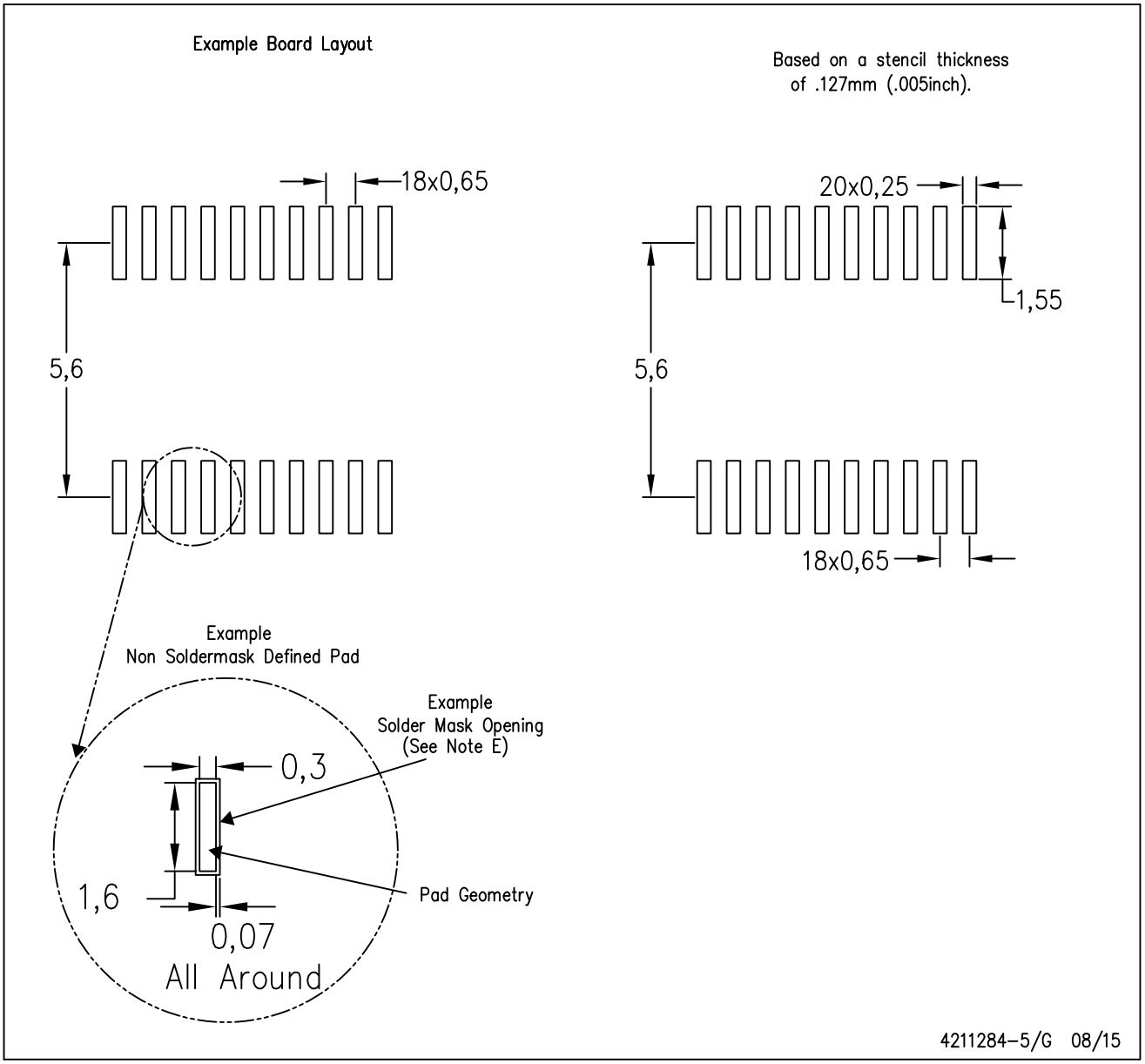

NOTES:
A. All linear dimensions are in millimeters.
B. This drawing is subject to change without notice.
C. Publication IPC–7351 is recommended for alternate design.
D. Laser cutting apertures with trapezoidal walls and also rounding corners will offer better paste release. Customers should contact their board assembly site for stencil design recommendations. Refer to IPC–7525 for other stencil recommendations.
E. Customers should contact their board fabrication site for solder mask tolerances between and around signal pads.

RGY (R–PVQFN–N20) PLASTIC QUAD FLATPACK NO–LEAD

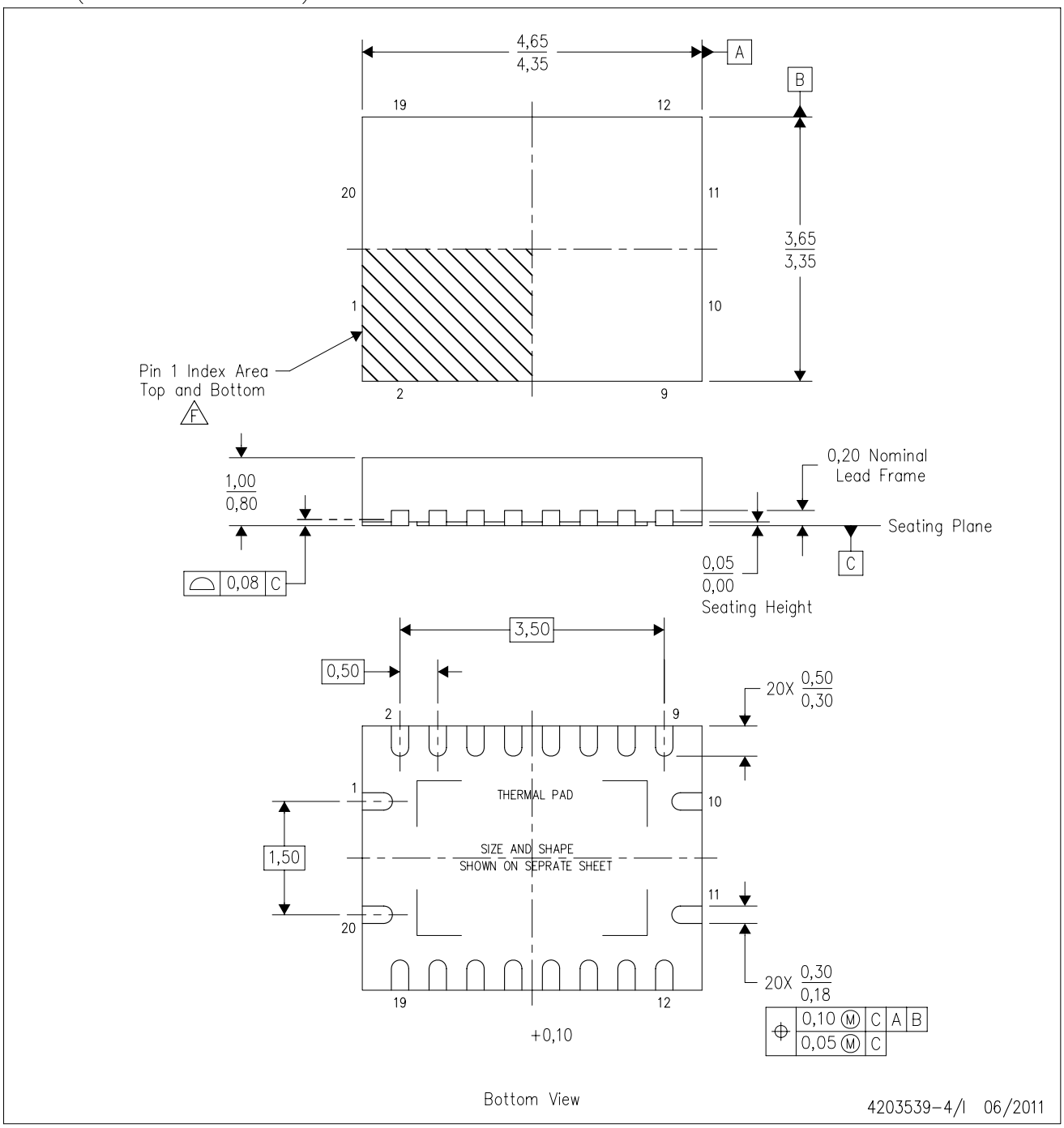

NOTES:
A. All linear dimensions are in millimeters. Dimensioning and tolerancing per ASME Y14.5M–1994.
B. This drawing is subject to change without notice.
C. QFN (Quad Flatpack No–Lead) package configuration.
D. The package thermal pad must be soldered to the board for thermal and mechanical performance.
E. See the additional figure in the Product Data Sheet for details regarding the exposed thermal pad features and dimensions.
F. Pin 1 identifiers are located on both top and bottom of the package and within the zone indicated. The Pin 1 identifiers are either a molded, marked, or metal feature.
G. Package complies to JEDEC MO–241 variation BA.

RGY (R–PVQFN–N20) PLASTIC QUAD FLATPACK NO–LEAD

THERMAL INFORMATION

This package incorporates an exposed thermal pad that is designed to be attached directly to an external heatsink. The thermal pad must be soldered directly to the printed circuit board (PCB). After soldering, the PCB can be used as a heatsink. In addition, through the use of thermal vias, the thermal pad can be attached directly to the appropriate copper plane shown in the electrical schematic for the device, or alternatively, can be attached to a special heatsink structure designed into the PCB. This design optimizes the heat transfer from the integrated circuit (IC).

For information on the Quad Flatpack No–Lead (QFN) package and its advantages, refer to Application Report, QFN/SON PCB Attachment, Texas Instruments Literature No. SLUA271. This document is available at www.ti.com.

The exposed thermal pad dimensions for this package are shown in the following illustration.

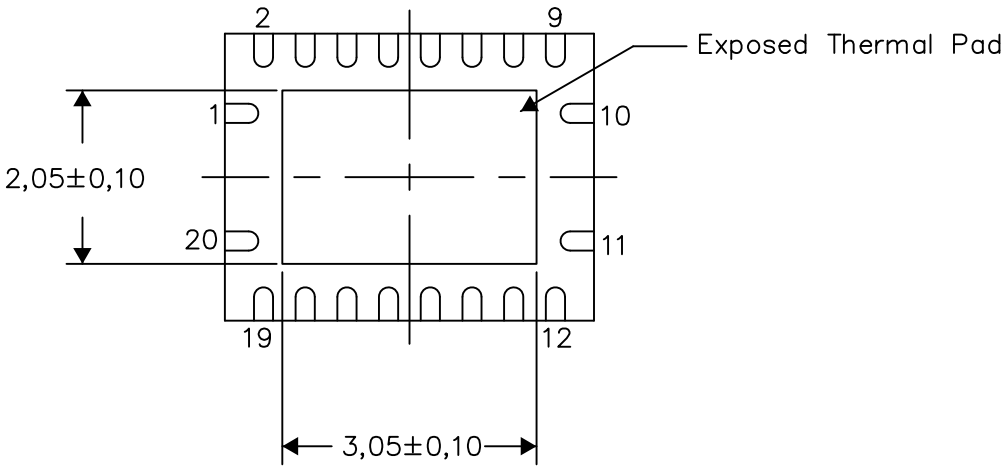

Bottom View

Exposed Thermal Pad Dimensions

4206353–4/P 03/14

NOTE: All linear dimensions are in millimeters

RGY (R–PVQFN–N20) PLASTIC QUAD FLATPACK NO–LEAD

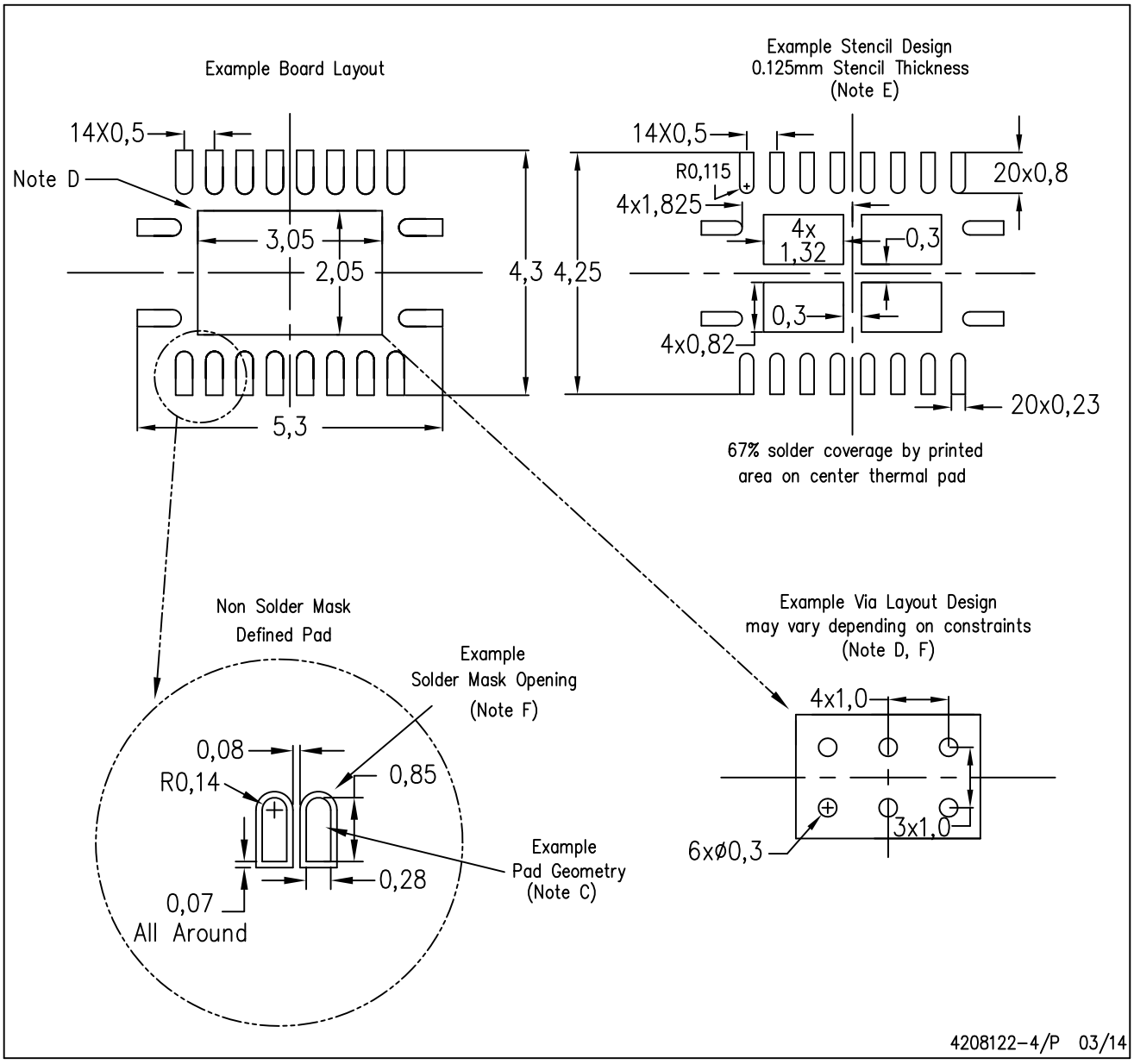

NOTES:
A. All linear dimensions are in millimeters.
B. This drawing is subject to change without notice.
C. Publication IPC–7351 is recommended for alternate designs.
D. This package is designed to be soldered to a thermal pad on the board. Refer to Application Note, Quad Flat–Pack QFN/SON PCB Attachment, Texas Instruments Literature No. SLUA271, and also the Product Data Sheets for specific thermal information, via requirements, and recommended board layout. These documents are available at www.ti.com <http: //www.ti.com>.
E. Laser cutting apertures with trapezoidal walls and also rounding corners will offer better paste release. Customers should contact their board assembly site for stencil design recommendations. Refer to IPC 7525 for stencil design considerations.
F. Customers should contact their board fabrication site for minimum solder mask web tolerances between signal pads.

DQS (R–PUSON–N20) PLASTIC SMALL OUTLINE NO–LEAD

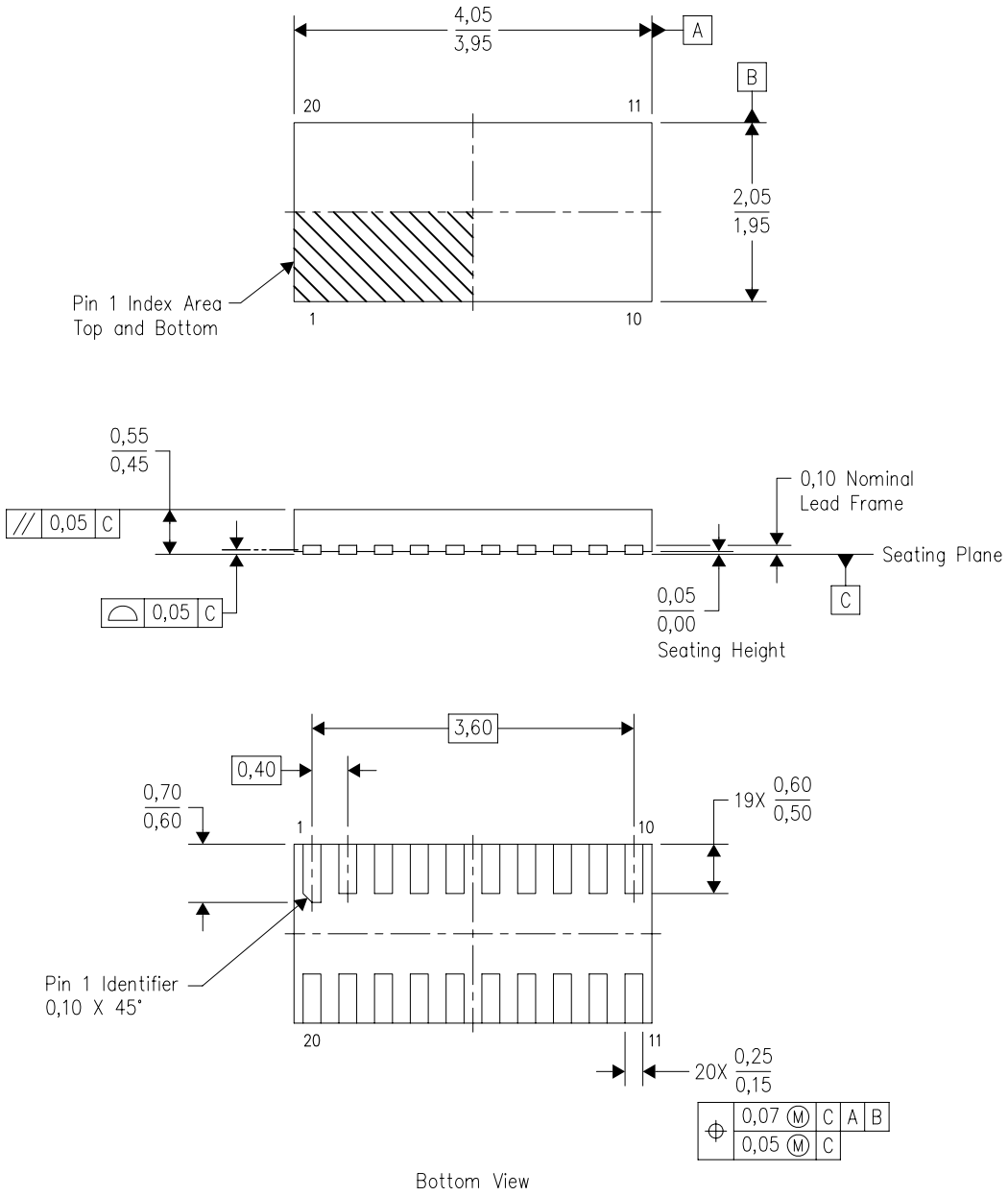

4210558/B 03/11

NOTES:
A. All linear dimensions are in millimeters. Dimensioning and tolerancing per ASME Y14.5M–1994.
B. This drawing is subject to change without notice.
C. SON (Small Outline No–Lead) package configuration.

DQS (R–PUSON–N20) PLASTIC SMALL OUTLINE NO–LEAD

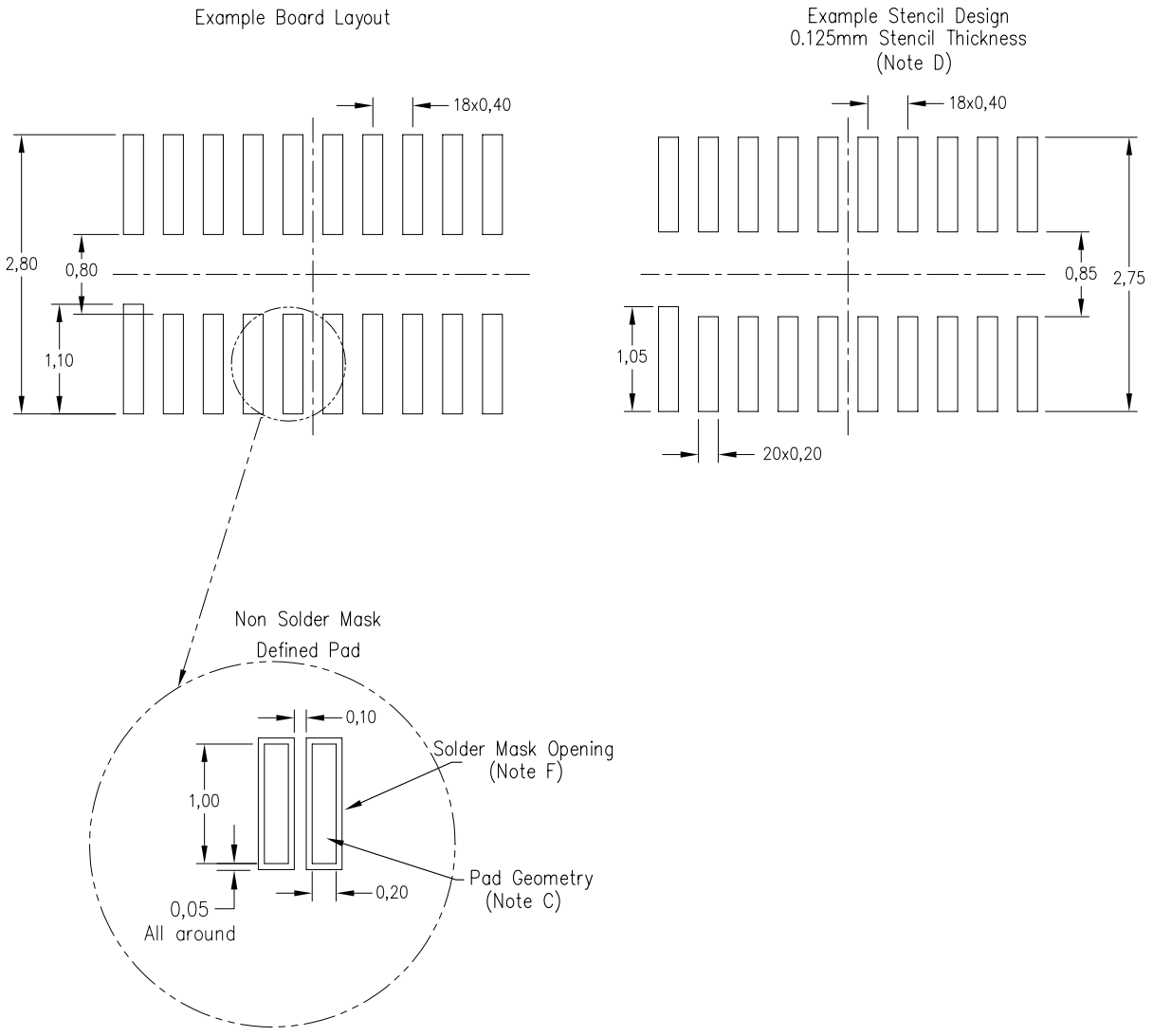

NOTES:
A. All linear dimensions are in millimeters.
B. This drawing is subject to change without notice.
C. Publication IPC–7351 is recommended for alternate designs.
D. Laser cutting apertures with trapezoidal walls and also rounding corners will offer better paste release. Customers should contact their board assembly site for stencil design recommendations. Refer to IPC 7525 for stencil design considerations.
E. Customers should contact their board fabrication site for minimum solder mask web tolerances between signal pads.

YZP (R–XBGA–N20) DIE–SIZE BALL GRID ARRAY

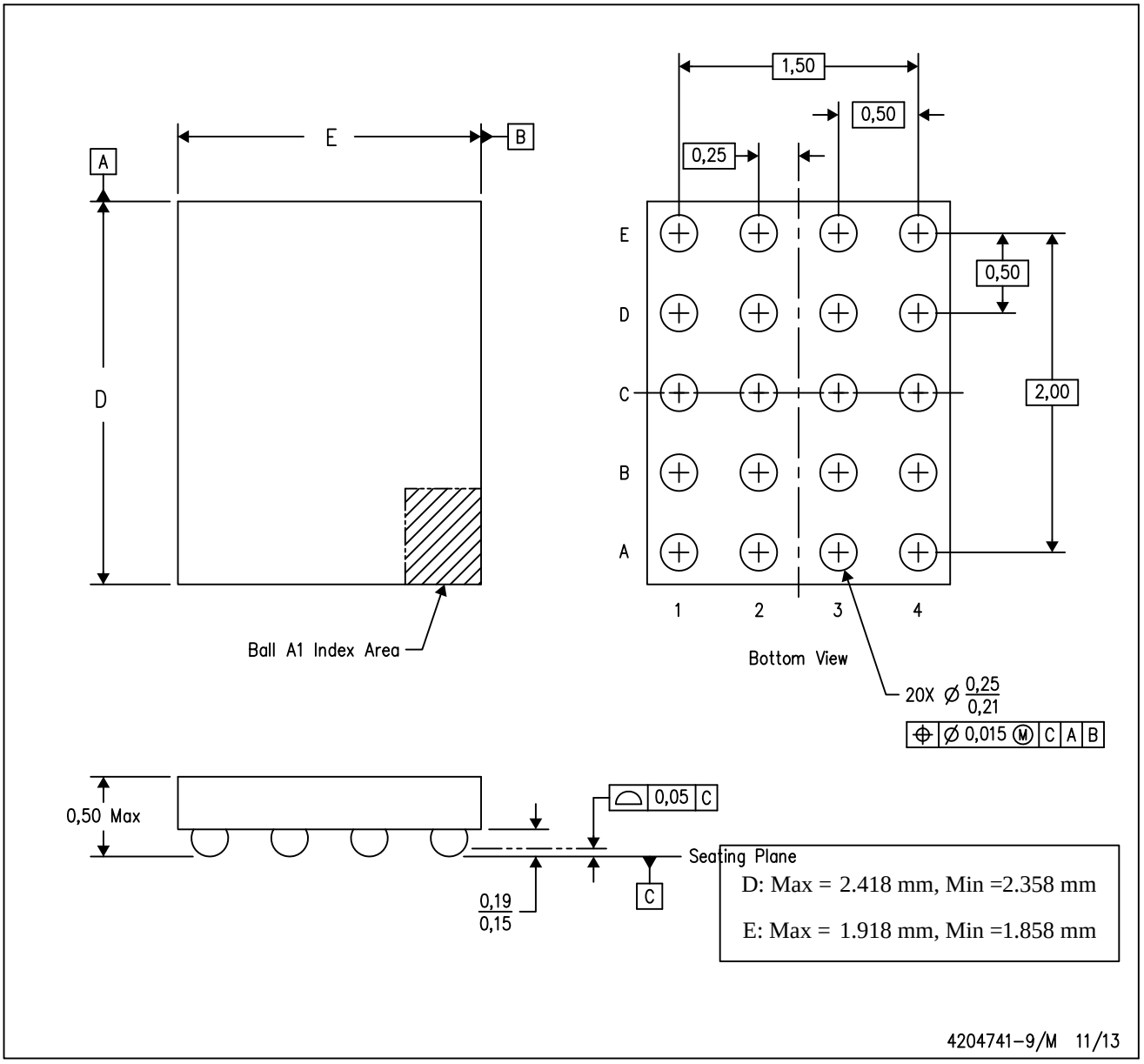

NOTES:
A. All linear dimensions are in millimeters. Dimensioning and tolerancing per ASME Y14.5M–1994.
B. This drawing is subject to change without notice.
C. NanoFree™ package configuration.

NanoFree is a trademark of Texas Instruments.

IMPORTANT NOTICE

Texas Instruments Incorporated and its subsidiaries (TI) reserve the right to make corrections, enhancements, improvements and other changes to its semiconductor products and services per JESD46, latest issue, and to discontinue any product or service per JESD48, latest issue. Buyers should obtain the latest relevant information before placing orders and should verify that such information is current and complete. All semiconductor products (also referred to herein as “components”) are sold subject to TI’s terms and conditions of sale supplied at the time of order acknowledgment.

TI warrants performance of its components to the specifications applicable at the time of sale, in accordance with the warranty in TI’s terms and conditions of sale of semiconductor products. Testing and other quality control techniques are used to the extent TI deems necessary to support this warranty. Except where mandated by applicable law, testing of all parameters of each component is not necessarily performed.

TI assumes no liability for applications assistance or the design of Buyers’ products. Buyers are responsible for their products and applications using TI components. To minimize the risks associated with Buyers’ products and applications, Buyers should provide adequate design and operating safeguards.

TI does not warrant or represent that any license, either express or implied, is granted under any patent right, copyright, mask work right, or other intellectual property right relating to any combination, machine, or process in which TI components or services are used. Information published by TI regarding third-party products or services does not constitute a license to use such products or services or a warranty or endorsement thereof. Use of such information may require a license from a third party under the patents or other intellectual property of the third party, or a license from TI under the patents or other intellectual property of TI.

Reproduction of significant portions of TI information in TI data books or data sheets is permissible only if reproduction is without alteration and is accompanied by all associated warranties, conditions, limitations, and notices. TI is not responsible or liable for such altered documentation. Information of third parties may be subject to additional restrictions.

Resale of TI components or services with statements different from or beyond the parameters stated by TI for that component or service voids all express and any implied warranties for the associated TI component or service and is an unfair and deceptive business practice. TI is not responsible or liable for any such statements.

Buyer acknowledges and agrees that it is solely responsible for compliance with all legal, regulatory and safety-related requirements concerning its products, and any use of TI components in its applications, notwithstanding any applications-related information or support that may be provided by TI. Buyer represents and agrees that it has all the necessary expertise to create and implement safeguards which anticipate dangerous consequences of failures, monitor failures and their consequences, lessen the likelihood of failures that might cause harm and take appropriate remedial actions. Buyer will fully indemnify TI and its representatives against any damages arising out of the use of any TI components in safety-critical applications.

In some cases, TI components may be promoted specifically to facilitate safety-related applications. With such components, TI’s goal is to help enable customers to design and create their own end-product solutions that meet applicable functional safety standards and requirements. Nonetheless, such components are subject to these terms.

No TI components are authorized for use in FDA Class III (or similar life-critical medical equipment) unless authorized officers of the parties have executed a special agreement specifically governing such use.

Only those TI components which TI has specifically designated as military grade or “enhanced plastic” are designed and intended for use in military/aerospace applications or environments. Buyer acknowledges and agrees that any military or aerospace use of TI components which have ***not*** been so designated is solely at the Buyer's risk, and that Buyer is solely responsible for compliance with all legal and regulatory requirements in connection with such use.

TI has specifically designated certain components as meeting ISO/TS16949 requirements, mainly for automotive use. In any case of use of non-designated products, TI will not be responsible for any failure to meet ISO/TS16949.

Products		**Applications**	
Audio	www.ti.com/audio	Automotive and Transportation	www.ti.com/automotive
Amplifiers	amplifier.ti.com	Communications and Telecom	www.ti.com/communications
Data Converters	dataconverter.ti.com	Computers and Peripherals	www.ti.com/computers
DLP® Products	www.dlp.com	Consumer Electronics	www.ti.com/consumer-apps
DSP	dsp.ti.com	Energy and Lighting	www.ti.com/energy
Clocks and Timers	www.ti.com/clocks	Industrial	www.ti.com/industrial
Interface	interface.ti.com	Medical	www.ti.com/medical
Logic	logic.ti.com	Security	www.ti.com/security
Power Mgmt	power.ti.com	Space, Avionics and Defense	www.ti.com/space-avionics-defense
Microcontrollers	microcontroller.ti.com	Video and Imaging	www.ti.com/video
RFID	www.ti-rfid.com		
OMAP Applications Processors	www.ti.com/omap	**TI E2E Community**	e2e.ti.com
Wireless Connectivity	www.ti.com/wirelessconnectivity		

Mailing Address: Texas Instruments, Post Office Box 655303, Dallas, Texas 75265
Copyright © 2016, Texas Instruments Incorporated