A Tallysman *Accutenna*™ TW2500 Magnet Mount Globalstar™ Certified STU Antenna

The TW2500 employs Tallysman's unique *Accutenna™* technology in a magnet mount, passive left hand circularly polarised antenna for the 1610 to 1620 MHz frequency band, certified and specifically designed to maximise the performance of the Globalstar™ STU (Simplex Transmit Unit) Modem.

The TW2500 features a high performance dual-feed patch element that provides great axial ratio (3 dB max) over the entire Globalstar™ frequency band, thus signals at the band edges remain truly circular, unlike the response of single feed antennas.

The TW2500 is housed in a compact, industrial-grade weather-proof, magnet mount enclosure, with threaded base holes for screw down attach. It is available with a 50 cm cable, allowing for the STU modem to be mounted out of the elements and reach, and still providing excellent Globalstar™ signal coverage.



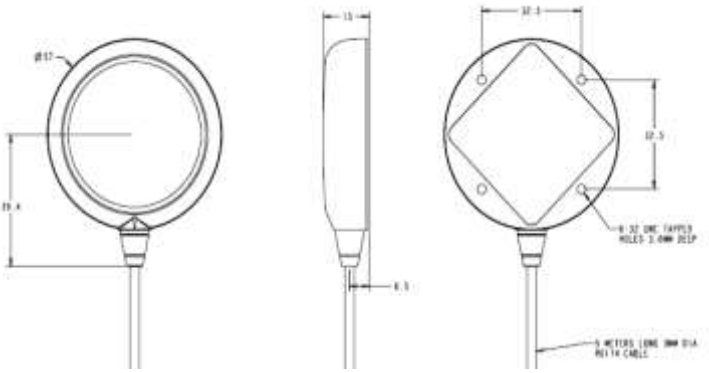

Applications

- Simplex Transmit Unit (STU) Applications
- Sea & Land Container Tracking
- Military & Security
- Fleet Management & Asset Tracking
- Marine & Avionics Systems
- Law Enforcement & Public Safety

Features

- Custom high gain 4.25 dBic dual-feed patch
- Great axial ratio, 3 dB over full bandwidth
- ESD 15 KV circuit protection
- Weather proof, IP67 housing
- Robust Industrial grade enclosure
- Magnet or screw mount
- Wide range of connector options

Benefits

- Excellent circular polarized signal transmission
- Industrial temperature range
- Rugged Design
- Ideal for harsh environments
- RoHS compliant
- Remote STU antenna

TW2500 Magnet Mount Globalstar™ Certified STU Antenna

Specifications Over full bandwidth, T=25°C

Antenna

Architecture	Dual, quadrature feeds
Antenna Gain (100mm ground plane)	4.25 dBic
Axial Ratio (over full bandwidth)	≤3 dB
0.5dB Bandwidth	1600MHz to 1630MHz

Electrical

Architecture	Hybrid 90° phase splitter
Frequency Bandwidth	1615 MHz ±10 MHz
Polarization	LHCP
Gain flatness	≤1 dB, from 1610 to 1620 MHz
VSWR (at antenna)	<1.5:1 typ. 1.8:1 max.
Return Loss (10 dB bandwidth)	<-20MHz
ESD Circuit protection	15 KV air discharge

Mechanicals & Environmental

Mechanical Size	57 mm dia. x 15 mm H
Cable	RG174
Operating Temp. Range	-40 to +85 °C
Enclosure	Radome: ASA Plastic, Base: Zamak White Metal
Weight	150 g
Attachment Method	Magnet or permanent (pre-tapped 4 x 6-32UNC)
Environmental	IP67 and RoHS compliant
Shock	Vertical axis: 50 G, other axes: 30 G
Vibration	3 axis, sweep = 15 min, 10 to 200 Hz sweep: 3 G
Warranty	One year – parts and labour

Ordering Information

TW2500 – Globalstar™ STU antenna, 33-2500-xx-yyyy

Where xx = connector type and yyyy = cable length in mm

Please refer to the Ordering Guide (http://www.tallysman.com/wp-content/uploads/Current-Ordering-Guide.pdf) for the current and complete list of available connectors.

Tallysman Wireless Inc

36 Steacie Drive Ottawa
Ottawa ON K2K 2A9 Canada
Tel 613 591 3131 Fax 613 591 3121 sales@tallysman.com

The information provided herein is intended as a guide only and is subject to change without notice. This document is not to be regarded as a guarantee of performance. Tallysman Wireless Inc. hereby disclaims any or all warranties and liabilities of any kind. © 2011 Tallysman Wireless Inc. All rights reserved.

Rev 2.2