THINKING ELECTRONIC INDUSTRIAL CO., LTD.

HEAD OFFICE: 12F, No.93, Dashun 1st Rd., Zuoying Dist., Kaohsiung, Taiwan
TEL: 886-7-5577660 FAX: 886-7-5570560

MANUFACTURING SITE

☐ KAOHSIUNG FACTORY 1:No. 51, Kaifa Rd., N.E.P.Z, Kaohsiung City 81170, Taiwan
TEL: 886-7-9616668 FAX: 886-7-9616698

☐ KAOHSIUNG FACTORY 2:No. 2-2, Xinjian S. Rd., N.E.P.Z., Kaohsiung City 81170, Taiwan
TEL: 886-7-9630001 FAX: 886-7-3635113

☑ CHANGZHOU FACTORY: No.6 Longmen Rd., Wujin High & New-Tech Industrial Development Zone, Changzhou, Jiangsu, China 213161
TEL:86-519-86578999 FAX:86-519-86558643

☑ DONG GUAN FACTORY: No.45, East Rd., Sha-Tao Dist., Chang-An Town, Dongguan City, Guangdong, China 523863
TEL:86-769-85542016 FAX:86-769-85546890

☐ YICHANG FACTORY: No. 283 Xiaoting Avenue, Xiaoting Dist., Yichang City 443007, Hubei, China
TEL:86-717-6510010 FAX:86-717-6511430

SPECIFICATION FOR APPROVAL

CUSTOMER	
CERTIFIED MODEL/TYPE	TVR10471-V
PART NO.	TVR10471KFARV (RoHS)
APPLICATION	
CUSTOMER P/N	
ISSUE DATE	Oct.15.2019
REV. NO.	
REV. DATE	

FOR CUSTOMER APPROVAL	CHECKED BY
	Yuan Yuan
	APPROVED BY
	Huaifang Zhang

REVISED RECORD SHEET

REV. NO	REV. DATE	REVISED CONTENT

INDEX

	Page
■ Part Number Code	1
■ Structure and Dimensions	2
■ Electrical Characteristics	2
■ Reliability	3 ~ 4
■ Soldering Recommendation	5
■ Power Derating Curve	6
■ RoHS Compliant Declaration	6
■ Warehouse Storage Conditions of Products	6
■ Taping and Dimensions	7
■ Packaging	8
■ Safety Approvals	9
■ Certificates	9
■ Max. Surge Current Derating Curves	10
■ Max. Leakage Current and Max. Clamping Voltage Curve	11

Part Number Code

Example :

TVR	**10**	**471**	**K**	**F**	**AR**	**V**
(1)	**(2)**	**(3)**	**(4)**	**(5)**	**(6)**	**(7)**

No.	Item	Digit	Specification
(1)	Product Type	TVR	Thinking varistor TVR type
(2)	Body Size	10	ϕ 10 mm
(3)	Varistor Voltage	471	47×10^1 V = 470V (V_{1mA})
(4)	Tolerance of V_{1mA}	K	±10%
(5)	Appearance	F	Y Kink Lead, Epoxy Coating
(6)	Packaging	A	Repositioning tapping (hole pitch: 12.7mm)
		R	reel
(7)	Optional Suffix	V	RoHS compliance &Multisurge series & meet the type 5 application in UL1449-4th

Structure and Dimensions

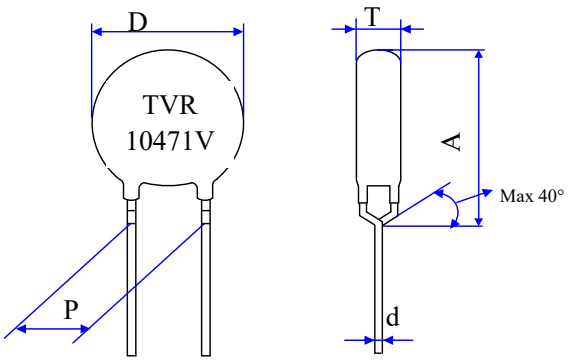

(unit : mm)

Body Size	D	P	d	A max.	T
ϕ 10	9.5~12.5	7.5±0.5	0.80±0.02	16.0	4.4~6.6

Coating material rating:UL 94 V-0

Electrical Characteristics (Ambient Ta=25 ℃)

Part No.	Varistor Voltage (@ 1mA DC)	Max. Continuous Voltage		Max. Clamping Voltage (8/20μS)		Max. Surge Current (8/20μS)
	V_{1mA} (V)	V_{AC}(rms) (V)	V_{DC} (V)	V_p (V)	I_P (A)	I (A)
TVR10471KFARV	470± 10 %	300	385	775	25	3500

Part No.	Max. Energy (10/1000μS)	Rated Power	Impulse Response Time	Max. Leakage Current at 75%V_{1mA}	Operating Temperature Range	Storage temperature Range
	W (J)	P (W)	nSec	I_L(μA)	(℃)	(℃)
TVR10471KFARV	85	0.4	<25	20	-40 ~ +105	-40 ~ +125

Reliability

<table>
<tr><th>Item</th><th>Standard</th><th>Test conditions / Methods</th><th>Specifications</th></tr>
<tr><td>Tensile Strength of Terminals</td><td>IEC60068-2-21</td><td>Gradually applying the force specified and keeping the unit fixed for 10±1 sec.
<table><tr><th>Terminal diameter (mm)</th><th>Force (Kg)</th></tr><tr><td>0.5<d≦0.8</td><td>1.0</td></tr><tr><td>0.8<d≦1.25</td><td>2.0</td></tr><tr><td>1.25<d</td><td>4.0</td></tr></table></td><td>No visible damage
$|\triangle V/V_{1mA}| \leqq 5\%$</td></tr>
<tr><td>Bending Strength of Terminals</td><td>IEC60068-2-21</td><td>Hold specimen and apply the force specified below to each lead. Bend the specimen to 90°, then return to the original position. Repeat the procedure in the opposite direction.
<table><tr><th>Terminal diameter (mm)</th><th>Force (Kg)</th></tr><tr><td>0.5<d≦0.8</td><td>0.5</td></tr><tr><td>0.8<d≦1.25</td><td>1.0</td></tr><tr><td>1.25<d</td><td>2.0</td></tr></table></td><td>No visible damage
$|\triangle V/V_{1mA}| \leqq 5\%$</td></tr>
<tr><td>Vibration</td><td>IEC 60068-2-6</td><td>Frequency range:10~55Hz
Amplitude:0.75mm or 98m/S^2
Direction:3 mutually perpendicular directions,2hrs each.</td><td>$|\triangle V/V_{1mA}| \leqq 5\%$ No visible damage</td></tr>
<tr><td>Solderability</td><td>IEC60068-2-20</td><td>245 ± 3 ℃ , 3 ± 0.3 sec</td><td>At least 95% of terminal electrode is covered by new solder</td></tr>
<tr><td>Resistance to Soldering Heat</td><td>IEC60068-2-20</td><td>260 ± 3 ℃ , 10 ± 1 sec</td><td>No visible damage
$|\triangle V/V_{1mA}| \leqq 5\%$</td></tr>
<tr><td>High Temperature Storage</td><td>IEC60068-2-2</td><td>125 ± 5 ℃ , 1000 ± 24 hrs</td><td>No visible damage
$|\triangle V/V_{1mA}| \leqq 5\%$</td></tr>
<tr><td>Damp Heat, Steady State</td><td>IEC 60068-2-78</td><td>The test is divided into two groups .
a.40 ± 2℃ , 9 0 ~ 95 % RH , 1344 hrs
b.40 ± 2℃ , 9 0 ~ 95 % RH , at 10%V_{DC}, 1344 hrs</td><td>No visible damage
$|\triangle V/V_{1mA}| \leqq 10\%$
Insulation Resistance ≧ 100MΩ</td></tr>
<tr><td>Rapid Change of Temperature</td><td>IEC60068-2-14</td><td>The conditions shown below shall be repeated 5 cycles
<table><tr><th>Step</th><th>Temperature (℃)</th><th>Period (minutes)</th></tr><tr><td>1</td><td>-40 ± 3</td><td>30 ± 3</td></tr><tr><td>2</td><td>Room temperature</td><td>5 ± 3</td></tr><tr><td>3</td><td>105 ± 2</td><td>30 ± 3</td></tr><tr><td>4</td><td>Room temperature</td><td>5 ± 3</td></tr></table></td><td>No visible damage
$|\triangle V/V_{1mA}| \leqq 5\%$</td></tr>
<tr><td>High Temp. Load</td><td>MIL-STD-202 Method 108</td><td>105± 2 ℃, 1000 ± 24 hrs, at V_{DC} or V_{rms}(Max. Operating Voltage)</td><td>$|\triangle V/V_{1mA}| \leqq 10\%$
No visible damage</td></tr>
</table>

Item	Standard	Test conditions / Methods	Specifications
8/20μS Surge Life	IEC 61051-1 4.6	10 pulses(8/20μS) , unipolar, interval 30 secs,amplitude corr. to max. Surge current derating curves for 20μS.	$\lvert \triangle V/V_{1mA} \rvert \leqq 10\%$ No visible damage
10/1000μS Surge Life	IEC 61051-1 4.6	10/1000μS waveform, 10 surge currents,unipolar,interval 2mins, amplitude corr. to max. surge current derating curves for 1000μS	$\lvert \triangle V/V_{1mA} \rvert \leqq 10\%$ No visible damage
Varistor Voltage Temp. Coefficient	Specification Standard	$\frac{V_{1mA}\ at105℃ - V_{1mA}\ at\ 25℃}{V_{1mA}\ at\ 25℃} X \frac{1}{80} X\ 100\ (\%\ /\ ℃)$ $\frac{V_{1mA}\ at\ -40℃ - V_{1mA}\ at\ 25℃}{V_{1mA}\ at\ 25℃} X \frac{1}{65} X\ 100\ (\%\ /\ ℃)$	$-0.05 \leqq TC \leqq 0.05(\%/℃)$
Voltage Proof	IEC 61051-1 4.9	Metal balls method, 2500 Vac 1 min	No visible damage

Soldering Recommendation

■ Wave Soldering Profile

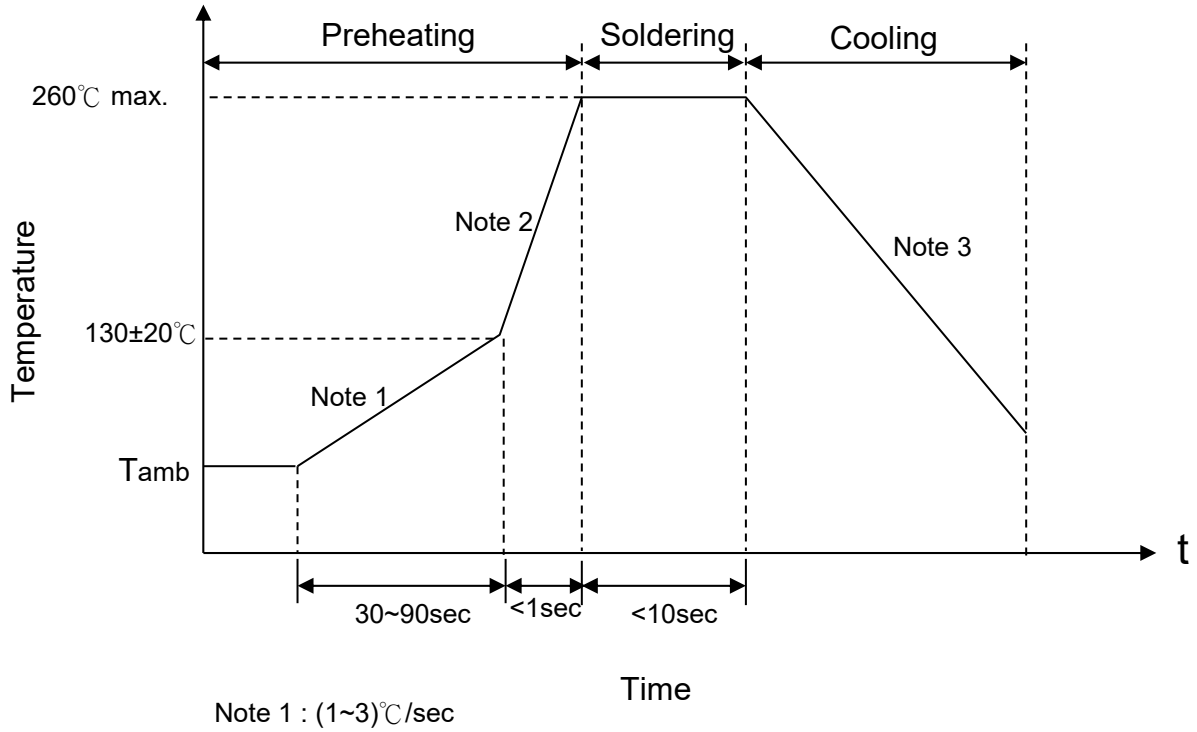

Note 1 : (1~3)℃/sec
Note 2 : Approx. 200℃/sec
Note 3 : 5℃/sec Max

■ Recommended Reworking Conditions with Soldering Iron

Item	Conditions
Temperature of Soldering Iron-tip	360℃ (max.)
Soldering Time	3 sec (max.)
Distance from Varistor	2 mm (min.)

Power Derating Curve

When operating temperature exceeds 105℃, the power, the Max.continuous operation Voltage,the Max.Surge Current and the Max.Energy should be derated as below figure, the derated coefficient is -5%.

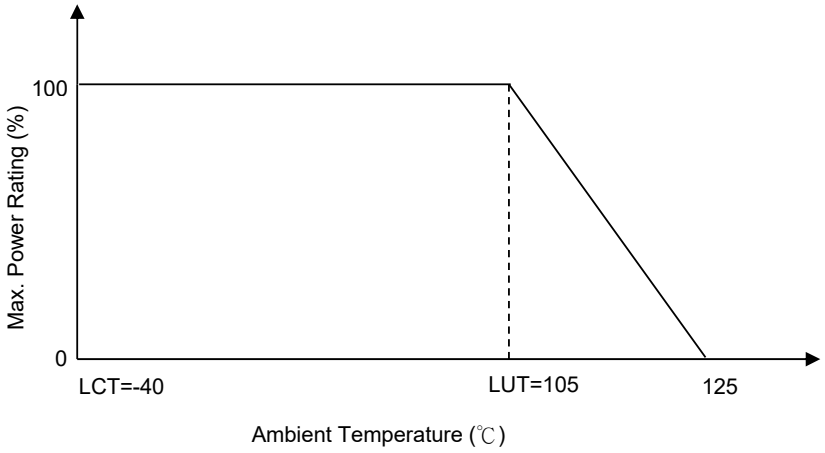

RoHS Compliant Declaration

We hereby declare that the components delivered to your company are compliant with RoHS directive 2011/65/EU.

Warehouse Storage Conditions of Products

(I) Storage Conditions :

1.Storage Temperature : -10℃~+40℃

2.Relative Humidity : ≦75%RH

3.Keep away from corrosive atmosphere and sunlight.

(II) Period of Storage : 1 year

Taping and Dimensions

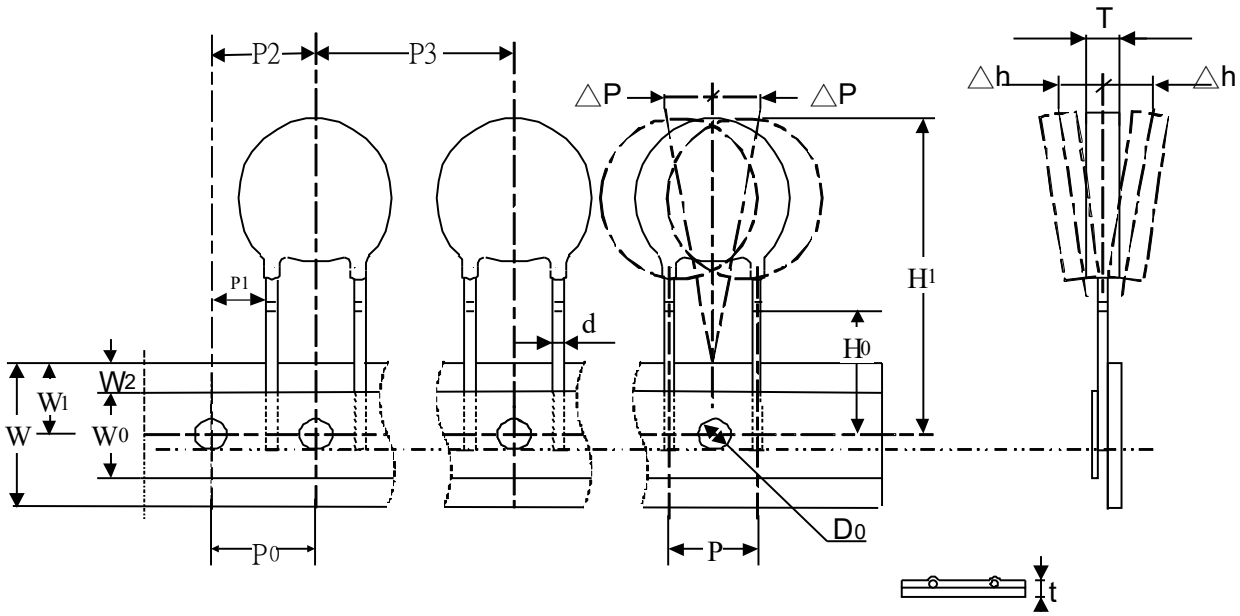

(Unit : mm)

ITEM.	P_0	P	P_1	P_2	P_3	H_0	H_1 Max	W_0	W_1	W_2 Max	W	△p Max	△h Max	D_0	t
Nor.	12.7	7.5	8.55	12.7	12.7	16	33.5	12	9	3	18	1.0	2.0	4	0.6
ToL.	±0.3	±0.5	±1	±1.3	±1	±0.5	---	±1	+0.75/ -0.5	---	±1	---	---	±0.2	±0.2

Packaging

(1) SPQ: 1000 Pcs/ Reel

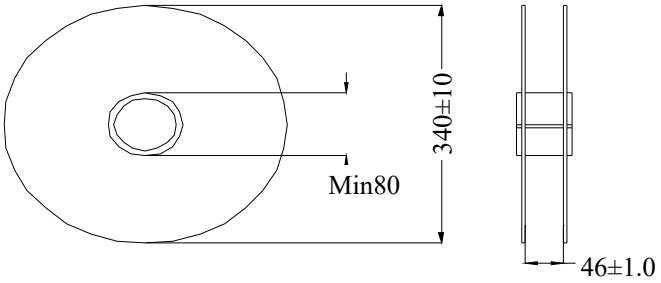

(2) Outer Box: 5Reels/ Carton

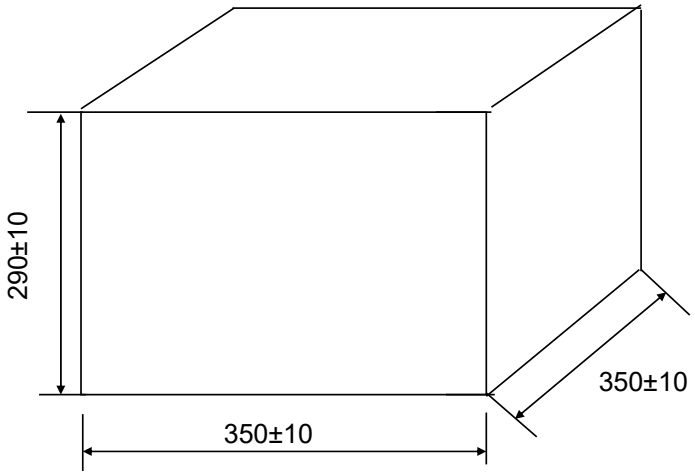

(Unit:mm)

Safety Approvals (Certified Model/Type :TVR10471-V)

* UL 1449 4th / cUL recognized (File # E314979)
· UL1449 (file number E314979) for use in SPD Type 5

* TUV recognized (File J50411758)

* CQC GB/T10193-1997 ` GB/T10194-1997 recognized
(File # CQC10001041749/CQC10001041748)

Certificates

(1) IATF 16949 certificate
(2) ISO 9001 certificate

Test Report

(1) RoHS test report

Max. Surge Current Derating Curves

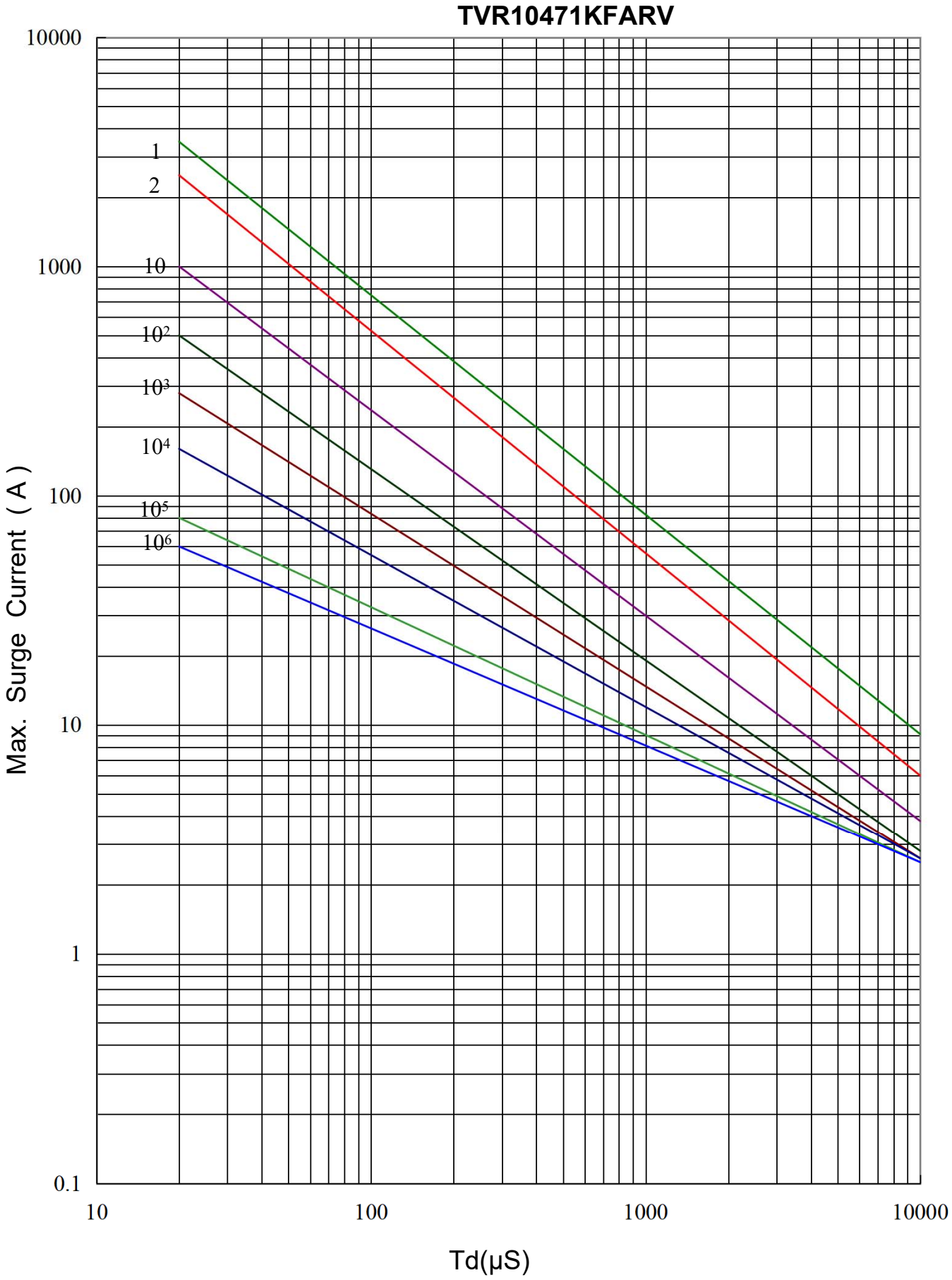

Max. Leakage Current and Max. Clamping Voltage Curve

