CONTINUOUS TOUCH DIMMER FOR DC LED LIGHTING

GENERAL DESCRIPTION

The TTP112 is a continuous touch detector IC for the DC LED lightings. The dimmer function controls by PWM output. The PWM duty range is 3% ~98% that is the lighting dimmer as 3% ~98%. It has high frequency and small adjusts duty rate, which can let the LED lighting dim smoothly.

FEATURES

- Operating voltage 4.5V ~6.8V
- Operating current < 1.2mA @VDD=5.0V, no load
- Support two output mode : (1) PWM Dim Mode, (2) Direct/Toggel Mode.
- Small adjusts duty rate 0.2%.
- Support two dimmer speeding as 6 sec and 12 sec lightness circulation.
- PWM output control NMOS or Direct output mode.
- Memorize turn on.
- Two turn off modes: delay off and non-delay off
- Two input dimmer modes: touch plate and switch
- Two dimmer mode Cycle and Non-Cycle
- Support Touch Direct Mode Function
- The application circuit is simple and easy.
- Can use wire to connect the IC to touch plate.

APPLICATION

- DC LED LAMP
- For PWM control output
- Direct/Toggle Mode output

BLOCK DIAGRAM

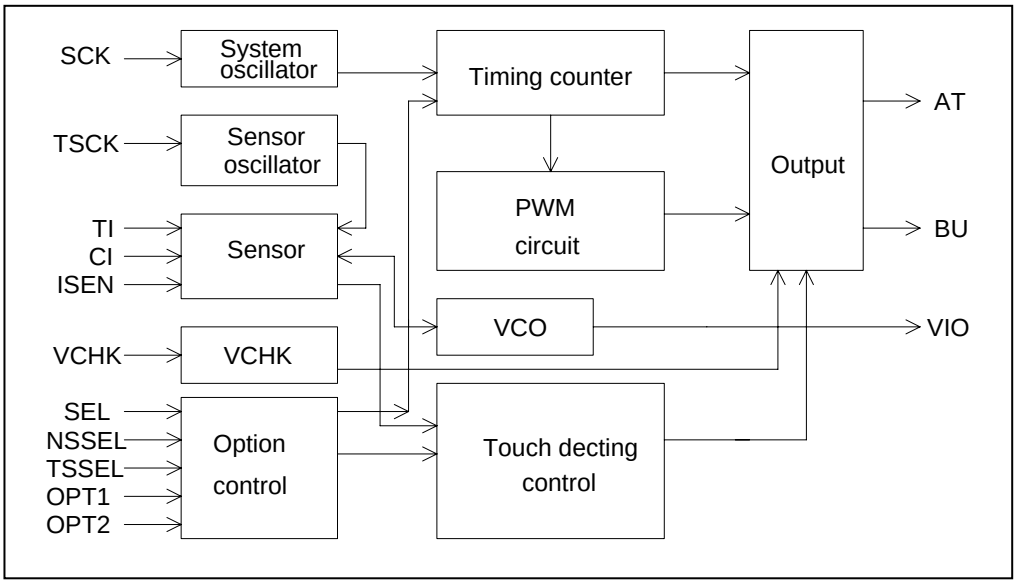

PAD DESCRIPTION

Pad No.	Pad Name	I/O Type	Pad Description
1	SCK	I	System clock input pin
2	TSCK	I	Sensor clock input pin
3	SEL	I-PL	Mode selection : PWM Mode : 0(Default) => non-delay off, 1=>delay off Direct/Toggle Mode : 0(Default) => non-MOT, 1=>MOT 80sec
4	VDD	P	Positive power supply
5	NSSEL	I-PL	PWM Dimmer speed mode selection (6sec/12sec): 0(Default) => normal speed(6sec/cycle), 1=> slow speed(12sec/cycle) Direct/Toggle Mode : 0(Default) =>Direct , 1=>Toggle
6	VCHK	I_PL	Low voltage detect
7	TI	I	Touch input/ Switch input
8	CI	I	Sensor control input
9	VIO	O	Test out
10	TSSEL	I-PH	Function setting input pin.
11	VSS	P	Negative power supply, ground
12	ISEN	I-PH	Sensitivity adjustment of release 1(Default)=> more sensitive, 0 => more insensitive
13	BU	O	Output pin to Buzzer
14	AT	O	Output pin control NMOS active high
15	OPT1	I-PH	Function setting input pin.
16	OPT2	I-PH	Function setting input pin.

Pin Type

I	CMOS input only
O	CMOS output
I-PH	CMOS input and pull-high resister
I-PL	CMOS input and pull-low resister
P	Power / Ground

ELECTRICAL CHARACTERISTICS

• Absolute Maximum Ratings

Parameter	Symbol	Conditions	Value	Unit
Operating Temperature	T_{OP}	—	-20 ~ +70	℃
Storage Temperature	T_{STG}	—	-50 ~ +125	℃
Power Supply Voltage	VDD	Ta=25°C	VSS-0.3 ~ VSS+5.5	V
Input Voltage	V_{IN}	Ta=25°C	VSS-0.3 ~ VDD+0.3	V
Note：VSS symbolizes for system ground				

• DC/AC Characteristics：(Test condition at room temperature=25℃)

Parameter	Symbol	Test Condition		Min.	Typ.	Max.	Unit
Operating Voltage	VDD			4.5	5.0	6.8	V
System oscillator	Fosc	VDD=5.0V, R_CK=100KΩ		-	1.2M	-	Hz
Sensor oscillator	Tosc	VDD=5.0V, R_TCK=68KΩ			2.0M		
Operating Current	I_{OP}	VDD=5.0V , No load R_CK=100KΩ R_TCK=68KΩ	Touch Mode	-	600	1200	uA
			Switch mode		250	500	
Input Ports	V_{IL}	Input Low Voltage		0	-	0.2	VDD
Input Ports	V_{IH}	Input High Voltage		0.8	-	1.0	VDD
Output Port Sink Current	I_{OL}	VDD=5.0V, V_{OL}=0.5V Pin : PWM, BUZZER		-	25	-	mA
Output Port Source Current	I_{OH}	VDD=5.0V, V_{OH}=VDD-0.5V Pin : PWM, BUZZER		-	8	-	mA
Input Pin Pull-low Resistor	R_{PL}	VDD=5.0V, Pin : NSSEL, SEL,VCHK			130K		ohm
Input Pin Pull-high Resistor	R_{PH}	VDD=5.0V, Pin : TI			300K		ohm
		VDD=5.0V, Pin : TSSEL, SEN,OPT1,OPT2			139K		

FUNCTION DESCRIPTION

1. Support Three kinds of package item :

TTP112-ADA : PWM Dim Cycle Mode, DIP-14.
TTP112-BOB : PWM Dim Cycle Mode, SOP-16.
TTP112-CDA : Direct Mode with Active High, DIP-14.
TTP112-DOB : Direct Mode with Active High, SOP-16.
TTP112-EOB : PWM Dim/ Direct Mode, Toggle Mode , SOP-16.

2. TTP112 : PWM Dim Mode Function

(1). Touch (switch) mode

a. Short touch(switch) input mode (light on/off)
   - In normal speed (NSSEL=0): when touch time is less then 0.3 second.
   - In slow speed (NSSEL=1): when touch time is less then 0.6 second.

b. Long touch(switch) mode (continuous dimming)
   - In normal speed (NSSEL=0): when touch time is more then 0.3 second.
   - In slow speed (NSSEL=1): when touch time is more then 0.6 second.

c. In touch mode can auto stop dimming, when dimming over most lightness 4 times then stop dimming luminance automatically.

(2). Two modes of turn off: non-delay off and delay off by option SEL

a. Non-delay-off mode (SEL=0): If lamp is on, short touch lamp will turn off. Short touch again lamp will be turn on.
b. Delay-off mode (SEL=1): If lamp is on, short touch will cause the lightness to be dark slowly, until the lightness become the darkest and keep the lightness, then turn off.
c. The total delay off time is about 18 seconds.
d. During delay off time, the lamp will be turn off immediately when touch again.

(3). Long touch or push switch about buzzer

a. Cycle mode
   1. A long touch or push switch will adjust the lightness, during adjusting the lightness. The lightness will change from bright to dark and from dark to bright continuously. Stopping long touch or push switch, the lamp will keep the lightness.
   2. There is “BI-BI” sound from buzzer when it will approach the highest lightness, and stop adjusting lightness. It will reach the highest lightness.
   3. A lightness cycle of normal speed-dim is about 6 seconds. Slow speed-dim is about 12 seconds.

b. Non-Cycle mode
   1. A long touch or push switch will adjust the lightness, when approach the highest lightness will stop adjusting the lightness. And “BI-BI” sound from buzzer.
   2. A long touch or push switch will adjust the lightness, when approach the darkest lightness will stop adjusting the lightness. Buzzer is soundless.

c. Buzzer frequency is about 4.0KHz.

(4). Memory function

a. When lamp is turned on every time , the lightness is the same as the last turn off lightness. If the lamp is delay off, the lamp will be turn on with the lightness that the lamp before become delay off mode.
b. When AC power is supplied at first time, the lamp is turn on with the highest lightness.

(5).PWM Duty Rate Active High

a. Adjusts rate: 3% ~98% in change rate 0.2%.

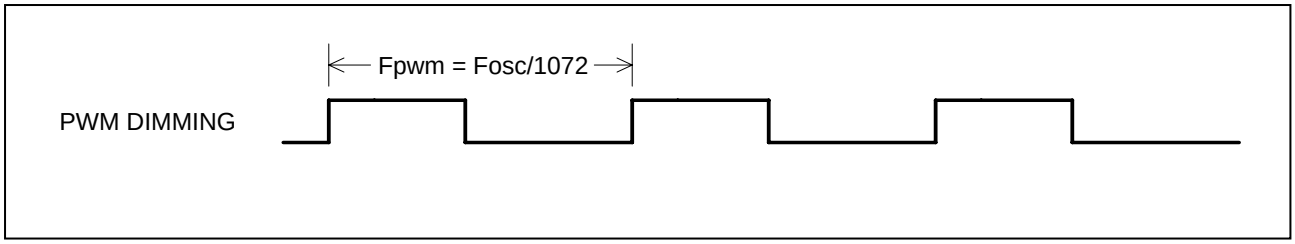

Note : if Fosc = 1.2MHZ → Fpwm=1.2KHz

3. TTP112 : Touch Direct/Toggle Mode Function

(1) Touch Direct output, active High (OPT1=1).

a. Touch detect time is 56ms (typical). There is "BI" sound from buzzer when it detects touch.

b. Touch release detect time is 46ms (typical).



(2) Touch Toggle Mode, initial state Low (OPT1=1).

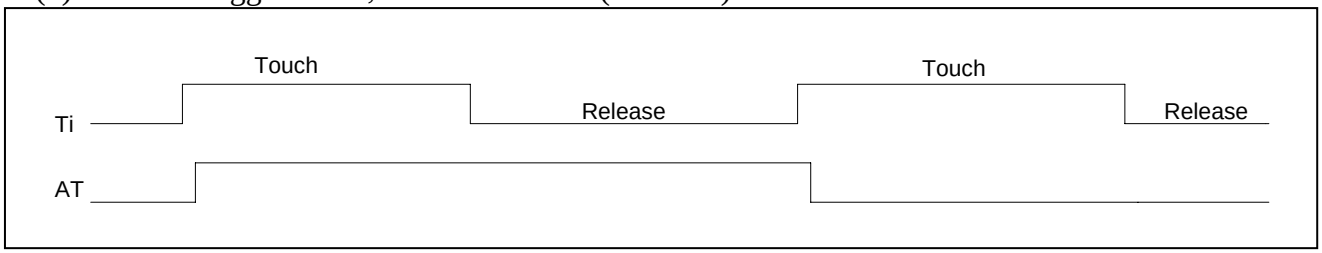

4. Mode Function Setting Pin Description

(1) SEL(I_PL) Pin

Mode	PWM Dim		Direct/Toggle	
Setting	1	0(initial)	1	0(initial)
Function	Delay Off 18sec	Non-delay Off	MOT 80sec	Non-MOT

(2) NSSEL(I_PL) Pin

Mode	PWM Dim		Direct/Toggle	
Setting	1	0(initial)	1	0(initial)
Function	Slow Speed 12sec	Normal speed 6sec	Toggle	Direct

(3) TSSEL(I_PH) Pin

Mode	PWM Dim		Direct/Toggle	
Setting	1(initial)	0	1(initial)	0
Function	Touch	Switch	Touch	-

(4) OPT1(I_PH) Pin

Mode	PWM Dim		Direct/Toggle	
Setting	1(initial)	0	1(initial)	0
Function	Cycle	Non-Cycle	Active High	Active Low-

(5) OPT2(I_PH) Pin

Setting	1(initial)	0
Function	Touch/Switch Mode	Direct/Toggle Mode

Note : SEL, NSSEL(Pull Low): 1(Short to VDD) , 0(default).
TSSEL, OPT1, OPT2 Pull Low): 1(default), 0(Short to VSS).
MOT: Maximum on time 80 sec (TYP.).
Delay Off 18sec (TYP.)
Normal speed 6sec (TYP.), Slow Speed 12sec (TYP.).

APPLICATION CIRCUIT

TTP112-ADA Application

Note : RI, CI, R_TCK, R_TI VALUE Ref. Touch Plate(maybe modify)

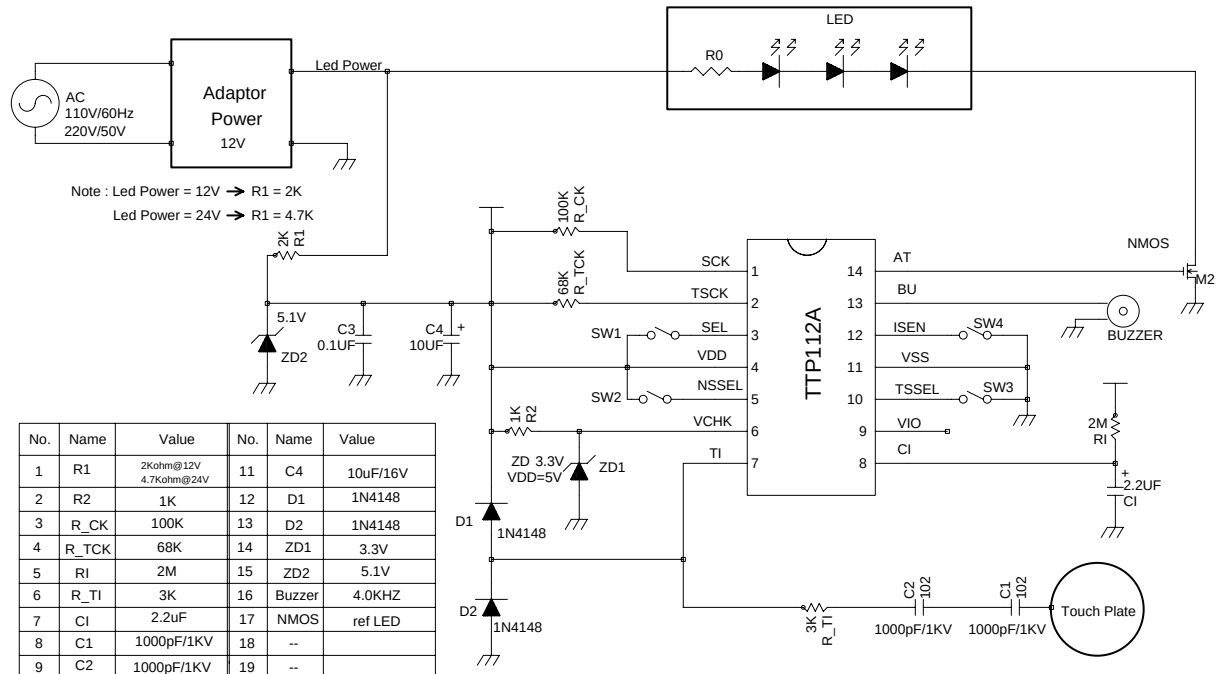

No.	Name	Value	No.	Name	Value
1	R1	2Kohm@12V 4.7Kohm@24V	11	C4	10uF/16V
2	R2	1K	12	D1	1N4148
3	R_CK	100K	13	D2	1N4148
4	R_TCK	68K	14	ZD1	3.3V
5	RI	2M	15	ZD2	5.1V
6	R_TI	3K	16	Buzzer	4.0KHZ
7	CI	2.2uF	17	NMOS	ref LED
8	C1	1000pF/1KV	18	--	
9	C2	1000pF/1KV	19	--	
10	C3	0.1uF	20	--	

TTP112-BOB Application

Note : RI, CI, R_TCK, R_TI VALUE Ref. Touch Plate(maybe modify)

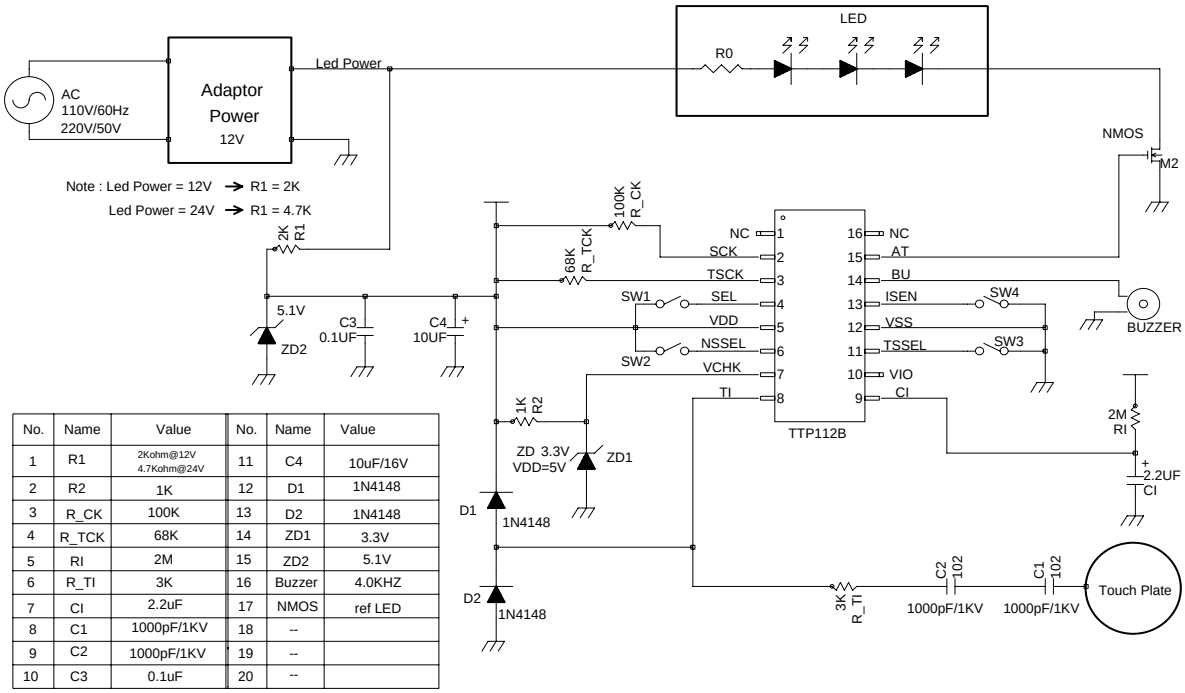

No.	Name	Value	No.	Name	Value
1	R1	2Kohm@12V 4.7Kohm@24V	11	C4	10uF/16V
2	R2	1K	12	D1	1N4148
3	R_CK	100K	13	D2	1N4148
4	R_TCK	68K	14	ZD1	3.3V
5	RI	2M	15	ZD2	5.1V
6	R_TI	3K	16	Buzzer	4.0KHZ
7	CI	2.2uF	17	NMOS	ref LED
8	C1	1000pF/1KV	18	--	
9	C2	1000pF/1KV	19	--	
10	C3	0.1uF	20	--	

TTP112-CDA Application
Direct Mode

Note : RI, CI, R_TCK, R_TI VALUE Ref. Touch Plate(maybe modify)

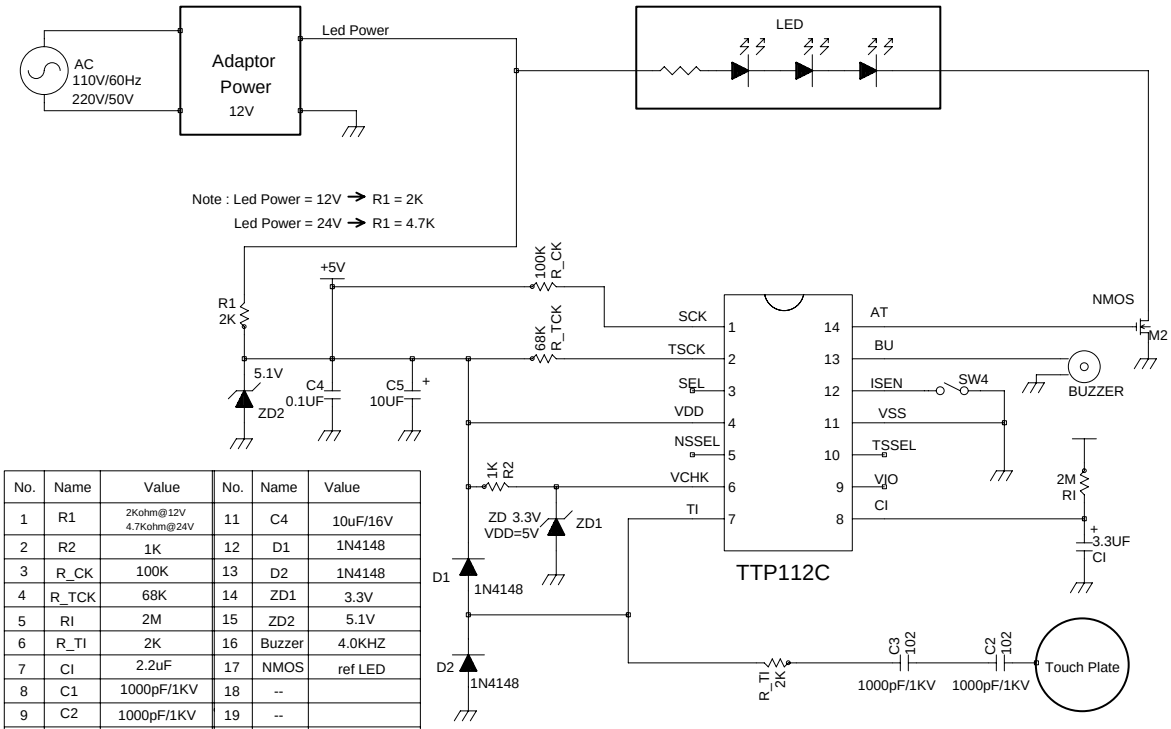

No.	Name	Value	No.	Name	Value
1	R1	2Kohm@12V 4.7Kohm@24V	11	C4	10uF/16V
2	R2	1K	12	D1	1N4148
3	R_CK	100K	13	D2	1N4148
4	R_TCK	68K	14	ZD1	3.3V
5	RI	2M	15	ZD2	5.1V
6	R_TI	2K	16	Buzzer	4.0KHZ
7	CI	2.2uF	17	NMOS	ref LED
8	C1	1000pF/1KV	18	--	
9	C2	1000pF/1KV	19	--	
10	C3	0.1uF	20	--	

TTP112-DOB Application Direct Mode

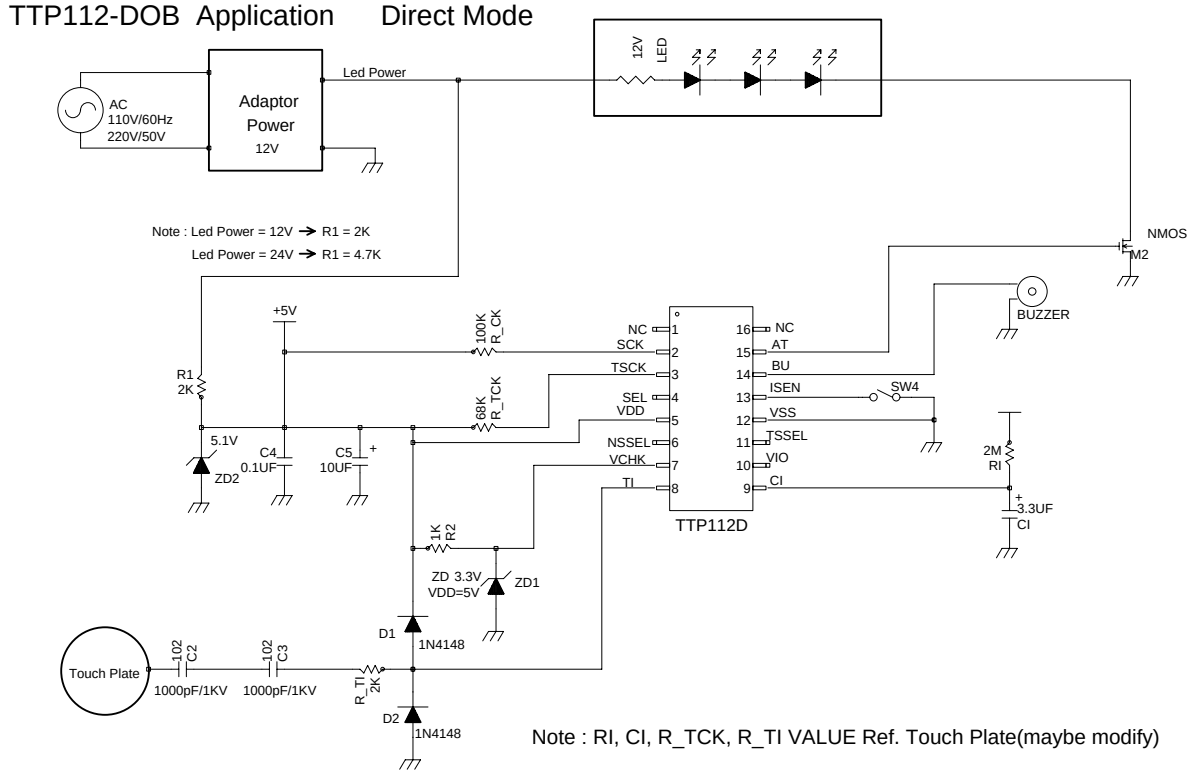

Note : RI, CI, R_TCK, R_TI VALUE Ref. Touch Plate(maybe modify)

TTP112-ADA Application

Note : RI, CI, R_TCK, R_TI VALUE Ref. Touch Plate(maybe modify)

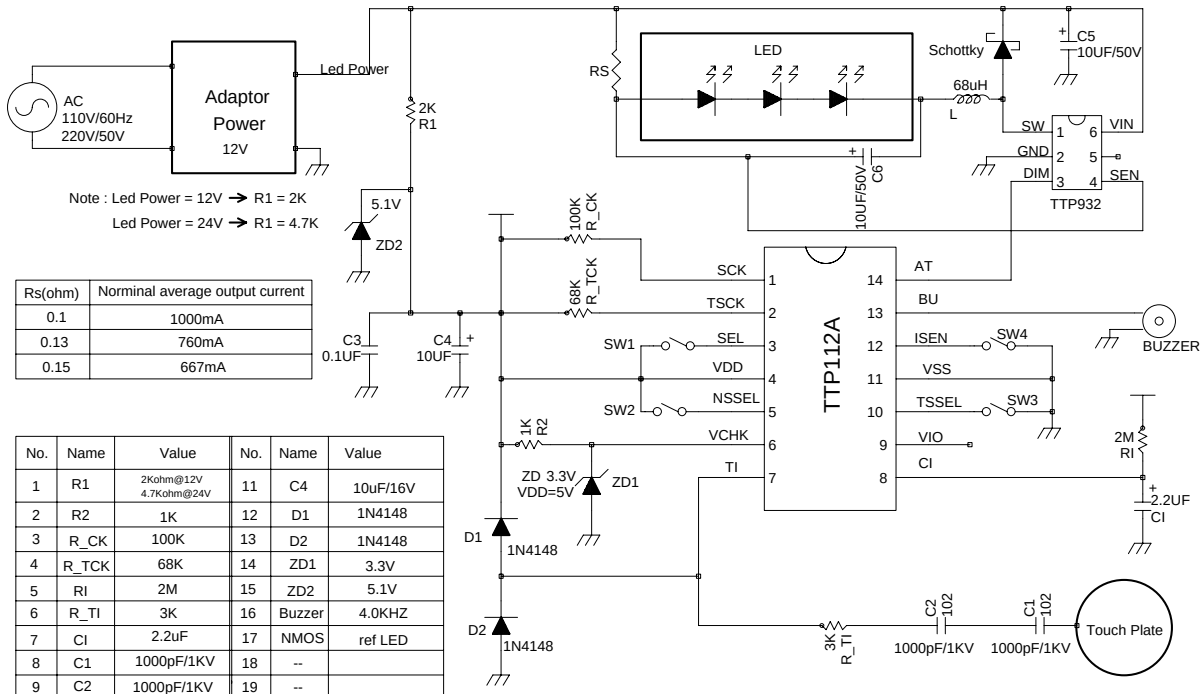

Rs(ohm)	Norminal average output current
0.1	1000mA
0.13	760mA
0.15	667mA

No.	Name	Value	No.	Name	Value
1	R1	2Kohm@12V 4.7Kohm@24V	11	C4	10uF/16V
2	R2	1K	12	D1	1N4148
3	R_CK	100K	13	D2	1N4148
4	R_TCK	68K	14	ZD1	3.3V
5	RI	2M	15	ZD2	5.1V
6	R_TI	3K	16	Buzzer	4.0KHZ
7	CI	2.2uF	17	NMOS	ref LED
8	C1	1000pF/1KV	18	--	
9	C2	1000pF/1KV	19	--	
10	C3	0.1uF	20	--	

TTP112-BOB with TTP932 Application

Note : RI, CI, R_TCK, R_TI VALUE Ref. Touch Plate(maybe modify)

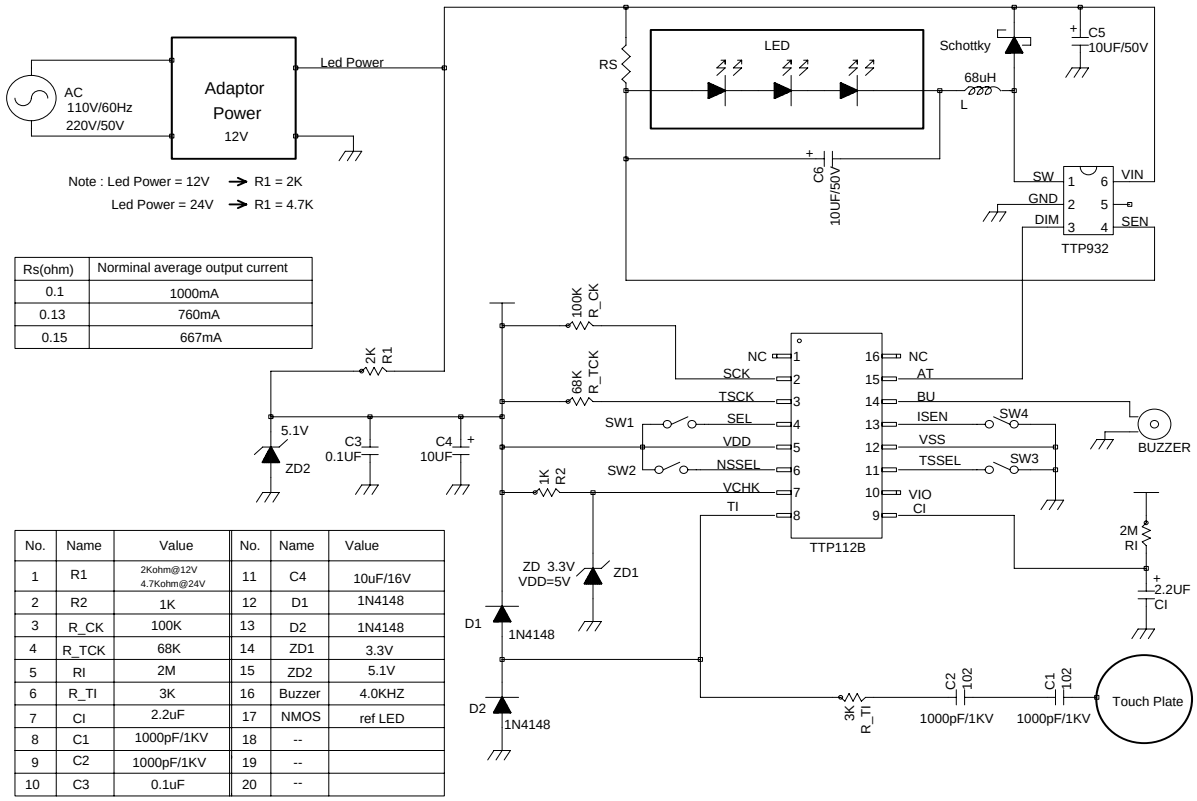

Rs(ohm)	Norminal average output current
0.1	1000mA
0.13	760mA
0.15	667mA

No.	Name	Value	No.	Name	Value
1	R1	2Kohm@12V 4.7Kohm@24V	11	C4	10uF/16V
2	R2	1K	12	D1	1N4148
3	R_CK	100K	13	D2	1N4148
4	R_TCK	68K	14	ZD1	3.3V
5	RI	2M	15	ZD2	5.1V
6	R_TI	3K	16	Buzzer	4.0KHZ
7	CI	2.2uF	17	NMOS	ref LED
8	C1	1000pF/1KV	18	--	
9	C2	1000pF/1KV	19	--	
10	C3	0.1uF	20	--	

TTP112-EOB Application

Note : RI, CI, R_TCK, R_TI VALUE Ref. Touch Plate(maybe modify)

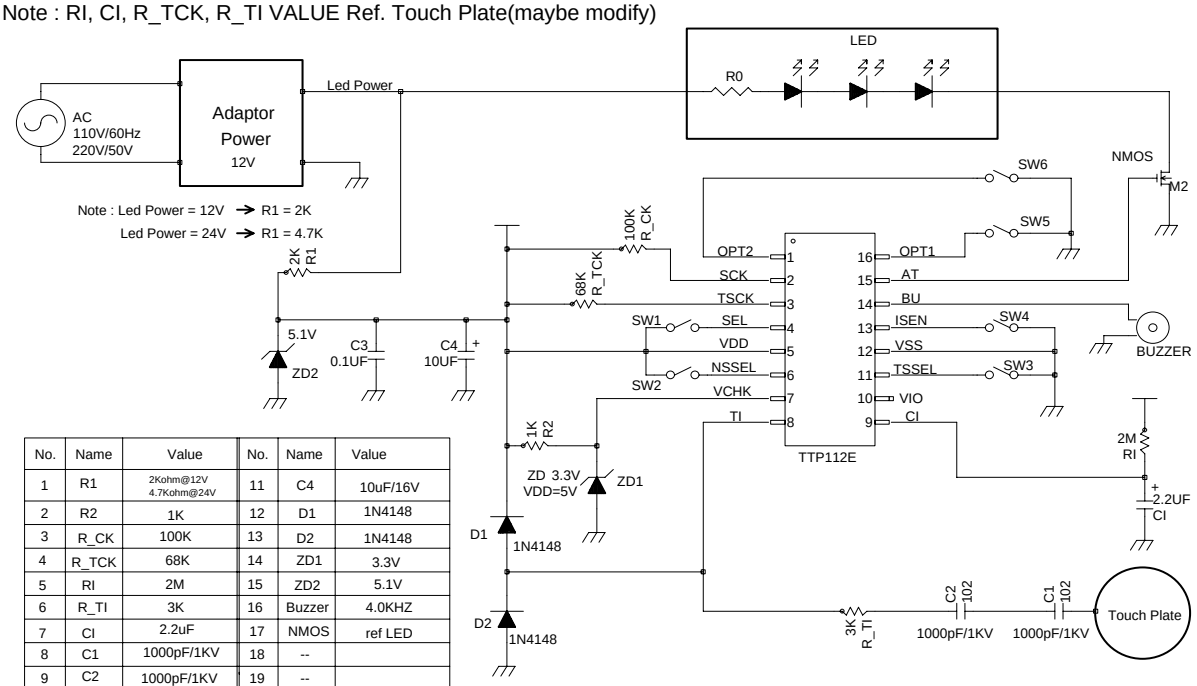

No.	Name	Value	No.	Name	Value
1	R1	2Kohm@12V 4.7Kohm@24V	11	C4	10uF/16V
2	R2	1K	12	D1	1N4148
3	R_CK	100K	13	D2	1N4148
4	R_TCK	68K	14	ZD1	3.3V
5	RI	2M	15	ZD2	5.1V
6	R_TI	3K	16	Buzzer	4.0KHZ
7	CI	2.2uF	17	NMOS	ref LED
8	C1	1000pF/1KV	18	--	
9	C2	1000pF/1KV	19	--	
10	C3	0.1uF	20	--	

TTP112-EOB with TP932 Application

Note : RI, CI, R_TCK, R_TI VALUE Ref. Touch Plate(maybe modify)

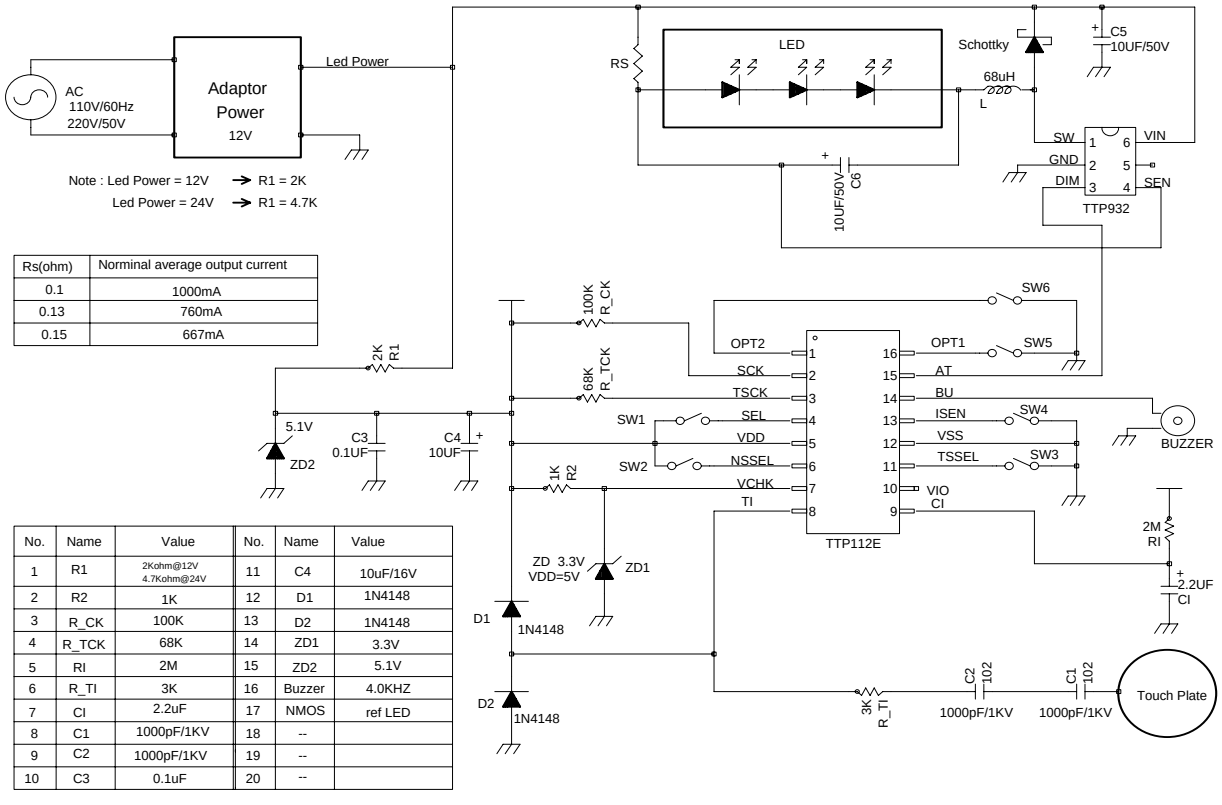

Rs(ohm)	Norminal average output current
0.1	1000mA
0.13	760mA
0.15	667mA

No.	Name	Value	No.	Name	Value
1	R1	2Kohm@12V 4.7Kohm@24V	11	C4	10uF/16V
2	R2	1K	12	D1	1N4148
3	R_CK	100K	13	D2	1N4148
4	R_TCK	68K	14	ZD1	3.3V
5	RI	2M	15	ZD2	5.1V
6	R_TI	3K	16	Buzzer	4.0KHZ
7	CI	2.2uF	17	NMOS	ref LED
8	C1	1000pF/1KV	18	--	
9	C2	1000pF/1KV	19	--	
10	C3	0.1uF	20	--	

PACKAGE CONFIGURATION:

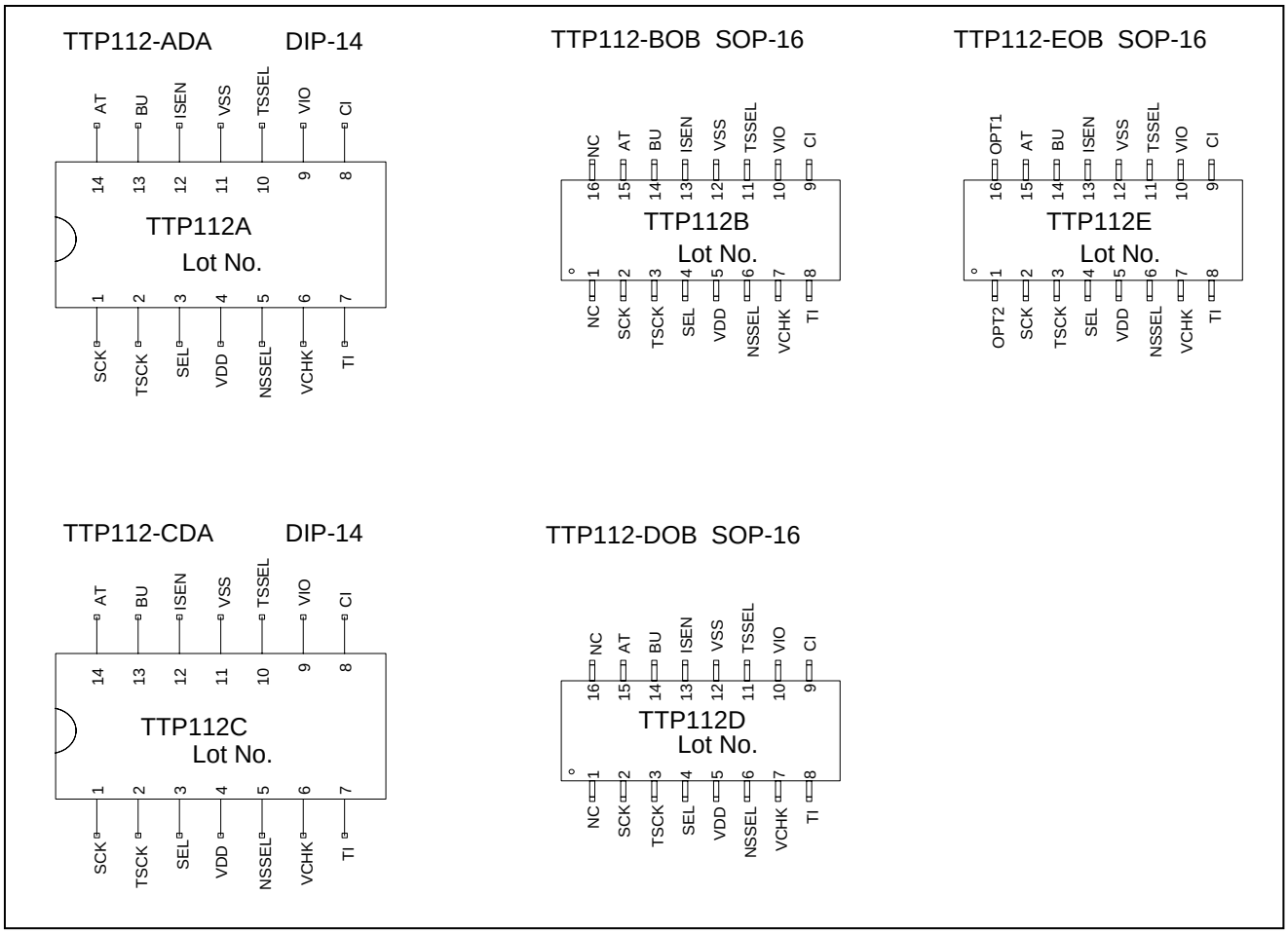

PACKAGE OUTLINE:

1. TTP112-ADA and TTP112-CDA DIP-14

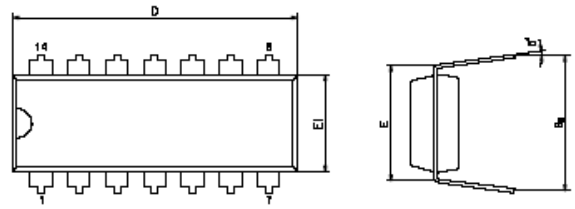

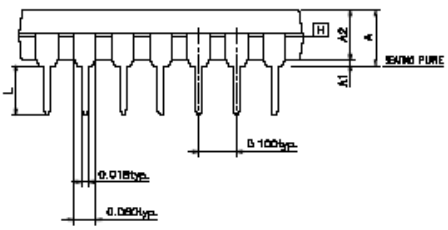

SYMBOLS	MIN.	NOR.	MAX.
A	–	–	0.210
A1	0.015	–	–
A2	0.125	0.130	0.135
D	0.735	0.750	0.775
E		0.300 BSC.	
E1	0.245	0.250	0.255
L	0.115	0.130	0.150
e_B	0.335	0.355	0.375
θ°	0	7	15

UNIT : INCH

NOTES:
1. JEDEC OUTLINE : MS-001 AA
2. "D","E1" DIMENSIONS DO NOT INCLUDE MOLD FLASH OR PROTRUSIONS.MOLD FLASH OR PROTRUSIONS SHALL NOT EXCEED .010 INCH.
3. eB IS MEASURED AT THE LEAD TIPS WITH THE LEADS UNCONSTRAINED.
4. POINTED OR ROUNDED LEAD TIPS ARE PREFERRED TO EASE INSERTION.
5. DISTANCE BETWEEN LEADS INCLUDING DAM BAR PROTRUSIONS TO BE .005 INCH MINIMUM.
6. DATUM PLANE [H] COINCIDENT WITH THE BOTTOM OF LEAD, WHERE LEAD EXITS BODY

2. TTP112-BOB and TTP112-DOB,TTP112-EOB SOP-16

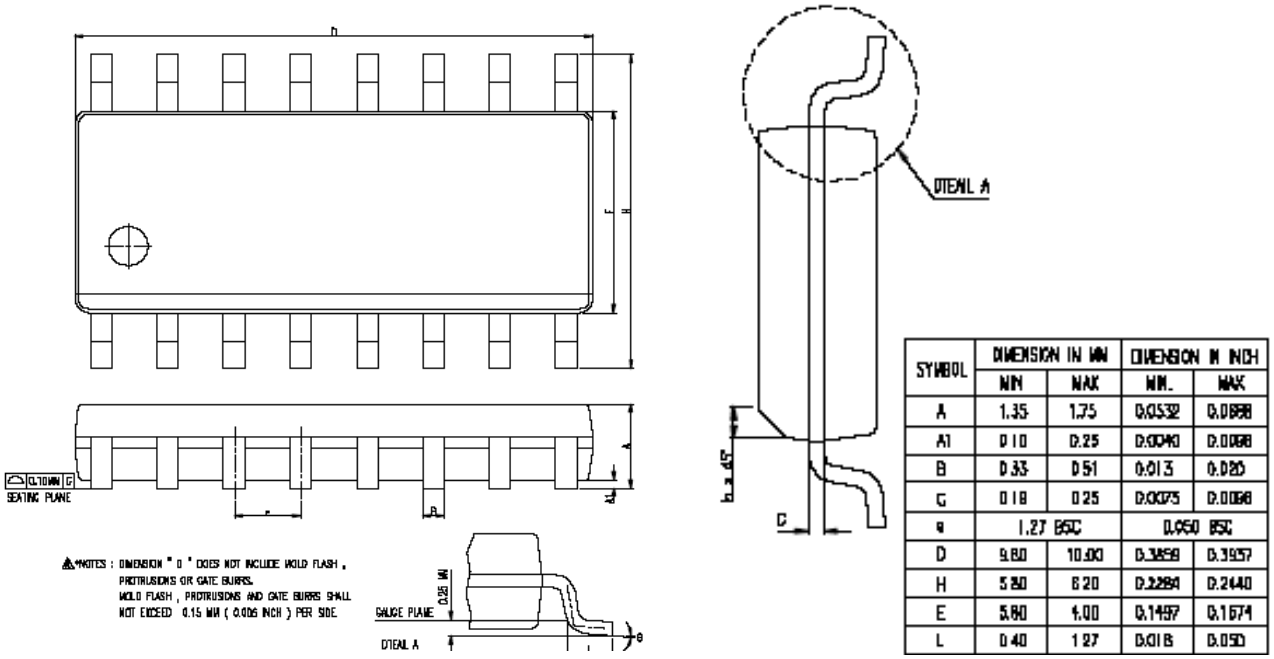

SYMBOL	DIMENSION IN MM		DIMENSION IN INCH	
	MIN	MAX	MIN.	MAX.
A	1.35	1.75	0.0532	0.0688
A1	0.10	0.25	0.0040	0.0098
B	0.33	0.51	0.013	0.020
C	0.18	0.25	0.0075	0.0098
e	1.27 BSC		0.050 BSC	
D	9.80	10.00	0.3859	0.3937
H	5.80	6.20	0.2284	0.2440
E	3.80	4.00	0.1497	0.1574
L	0.40	1.27	0.016	0.050

ORDER INFORMATION

1. For TTP112
a. Package form: TTP112-ADA, TTP112-BOB, TTP112-CDA, TTP112-DOB, TTP112-EOB
b. Chip form: TCP112
c. Wafer base: ---

REVISE HISTORY

1. 2012/07/12 -Original version：V_1.0