*Wideband, Microwave, Shutdown*

# Monolithic Amplifier

## TSS-183A+

50Ω 5 to 18 GHz



CASE STYLE: DQ849

## The Big Deal

- Surface Mount Amplifier up to 18 GHz
- Integrated matching, DC Blocks and bias circuits
- Shutdown feature, with excellent switching time performance

## Product Overview

The TSS-183A+ is a surface mount, MMIC amplifier with shutdown feature fabricated using InGaAs PHEMT technology and is a fully integrated gain block up to 18 GHz. It is packaged in Mini-Circuits industry standard 3x3 mm MCLP package, which provides excellent RF and thermal performance. The TSS-183A+ integrates the entire matching network with the majority of the bias circuit inside the package, reducing the need for complicated external circuits. This approach makes the TSS-183A+ extremely flexible and enables simple, straightforward use.

## Key Features

| Feature | Advantages |
|---|---|
| Wideband, 5 to 18 GHz | Broad frequency range supports a wide array of applications from microwave radio and radar , to military communications and countermeasures. |
| Excellent Gain Flatness | Typical ±0.9 dB gain flatness across the entire frequency range minimizes the need for external equalizer networks making it a great fit for instrumentation and EW applications. |
| High Isolation | With reverse isolation of 36 dB, the TSS-183A+ is an excellent choice for buffering broadband circuits. It is an ideal LO driver amplifier and provides designers system flexibility and margin when integrating cascaded RF components. |
| Shutdown feature | Allow users to turn on and off the amplifier with pulsed signals while keeping the power supply at constant voltage. |
| Small size | 3x3 mm, 8-lead MCLP package |
| Integrated DC Blocks & Bias-Tee | Saver motherboard space and minimizes overall cost. Very user friendly. |

*Wideband, Microwave, Shutdown*

# Monolithic Amplifier 5-18 GHz

## Product Features

- Fast shutdown, 29 nS
- Gain, 13.6 dB typ. & Flatness, ±0.9 dB
- Output Power, up to +17.9 dBm typ.
- Excellent isolation, 36 dB typ.
- Positive Supply Voltage, 5.0V
- Integrated DC blocks, Bias-Tee & Microwave bypass capacitor
- Unconditionally Stable
- Aqueous washable; 3mm x 3mm SMT package



**TSS-183A+**

CASE STYLE: DQ849

***+RoHS Compliant***

*The +Suffix identifies RoHS Compliance. See our web site for RoHS Compliance methodologies and qualifications*

## Typical Applications

- Military EW and Radar
- DBS
- Wideband Isolation amplifier
- Microwave point-to-point radios
- Satellite systems

## General Description

The TSS-183A+ is a surface mount, MMIC amplifier with shut-down feature fabricated using InGaAs PHEMT technology and is a fully integrated gain block up to 18 GHz. It is packaged in Mini-Circuits industry standard 3x3 mm MCLP package, which provides excellent RF and thermal performance and MSL-1. The TSS-183A+ integrates the entire matching network with the majority of the bias circuit inside the package, reducing the need for complicated external circuits. This approach makes the TSS-183A+ extremely flexible and enables simple, straightforward use.

### *simplified schematic and pad description*

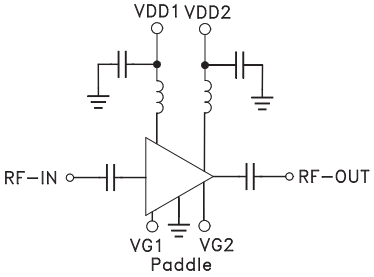


Top View

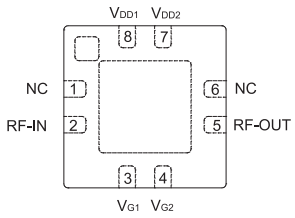


| Function | Pad Number | Description *(See Application Circuit, Fig. 1)* |
|---|---|---|
| RF-IN | 2 | RF input pad |
| RF-OUT | 5 | RF output pad |
| $V_{DD1}$ & $V_{DD2}$ | 7,8 | DC power supply ($V_{DD}$). Two pads are connected per Figure 1. |
| GND | Paddle | Connected to ground. |
| $V_{G1}$ & $V_{G2}$ | 3,4 | Control voltage for shutdown(VG). Two pads are connected per Figure 1. |
| NC | 1,6 | No internal connection. Recommended usage per PCB layer PL-588 |

## Electrical Specifications[1] at 25°C, Zo=50Ω, and $V_{DD}$=5V unless otherwise noted.

| Parameter | Condition (GHz) | Amplifier-ON | | | Amplifier-OFF | Units |
|---|---|---|---|---|---|---|
| | | Min. | Typ. | Max. | Typ. | |
| Frequency Range | | 5 | | 18 | 5-18 | GHz |
| Noise Figure | 5 | | 7.4 | | — | dB |
| | 8 | | 4.1 | | — | |
| | 10 | | 4.4 | | — | |
| | 12 | | 4.6 | | — | |
| | 14 | | 5.0 | | — | |
| | 18 | | 6.0 | | — | |
| Gain | 5 | — | 13.5 | — | -27 | dB |
| | 8 | 12 | 14.9 | — | -19 | |
| | 10 | 12 | 14.2 | — | -18 | |
| | 12 | — | 13.6 | — | -17 | |
| | 14 | — | 13.4 | — | -17 | |
| | 18 | 10.4 | 13.1 | — | -18 | |
| Gain Flatness | 5-18 | | ±0.9 | | — | dB |
| Reversed Isolation | 5-18 | | 36 | | 22 | dB |
| Input Return Loss | 5 | | 12 | | 6 | dB |
| | 8 | | 36 | | 3 | |
| | 10 | | 16 | | 3 | |
| | 12 | | 13 | | 4 | |
| | 14 | | 16 | | 5 | |
| | 18 | | 8 | | 5 | |
| Output Return Loss | 5 | | 9 | | 6 | dB |
| | 8 | | 14 | | 4 | |
| | 10 | | 18 | | 4 | |
| | 12 | | 14 | | 2 | |
| | 14 | | 13 | | 2 | |
| | 18 | | 9 | | 1 | |
| Output Power @1dB compression AMP-ON | 5 | — | 17.2 | — | — | dBm |
| | 8 | — | 18.5 | — | — | |
| | 10 | 16.0 | 17.9 | — | — | |
| | 12 | — | 17.8 | — | — | |
| | 14 | — | 18.7 | — | — | |
| | 18 | — | 17.9 | — | — | |
| Output IP3 (Pout=+9dBm/tone) | 5 | | 33.7 | | — | dBm |
| | 8 | | 30.0 | | — | |
| | 10 | | 28.9 | | — | |
| | 12 | | 27.8 | | — | |
| | 14 | | 26.6 | | — | |
| | 18 | | 27.4 | | — | |
| Device Operating Voltage ($V_{DD}$) | | 4.8 | 5.0 | 5.2 | 5.0 | V |
| Device Operating Current (Id) | | | 145 | 166 | 0.3 | mA |
| Control Voltage ($V_G$) | | | 0 | | -5 | V |
| DC Current (Id) Variation Vs. Temperature[2] | | | 29.4 | | — | µA/°C |
| DC Current (Id) Variation Vs. Voltage | | | 0.0021 | | — | mA/mV |
| Thermal Resistance | | | 61 | | | °C/W |

[1] Measured on Mini-Circuits Characterization test board TB-969+. See Characterization Test Circuit (Fig. 1)
[2] (Current at 85°C - Current at -45°C)/130)

## Absolute Maximum Ratings[3]

| Parameter | Ratings |
|---|---|
| Operating Temperature (ground lead) | -40°C to 85°C |
| Storage Temperature | -55°C to 100°C |
| Total Power Dissipation | 0.98 W |
| Input Power | 20 dBm |
| DC Voltage $V_{DD}$[4] (Pad 7, 8) | 5.5V |
| DC Voltage $V_G$[5] (Pad 3, 4) | -15V |
| DC Voltage RF-IN & RF-OUT (Pad 2 & 5) | 10V |

[3] Permanent damage may occur if these limits are exceeded.
[4] Measured by keeping $V_G$=0V. $V_{DD1}$ & $V_{DD2}$ pads are connected per Figure 1.
[5] Measured by keeping $V_{DD}$=5V. $V_{G1}$ & $V_{G2}$ pads are connected per Figure 1.

### Control Voltage ($V_G$) Fig. 1

| | Min. | Typ. | Max. | Units |
|---|---|---|---|---|
| Amplifier-ON | -0.2 | — | 0 | V |
| Amplifier-OFF | -5 | — | -4 | V |

### Switching Specifications (Rise/Fall Time)

| Parameter | | Min. | Typ. | Max. | Units |
|---|---|---|---|---|---|
| Amplifier ON to Shutdown | OFF TIME (50% Control to 10% RF) | — | 29 | — | ns |
| | FALL TIME (90 to 10% RF) | — | 14 | — | |
| Amplifier Shutdown to ON | ON TIME (50% Control to 90% RF) | — | 226 | — | ns |
| | RISE TIME (10% to 90% RF) | — | 163 | — | |
| Control Voltage Leakage | | — | 12 | — | mV |

## Characterization Test Circuit / Recommended Application Circuit

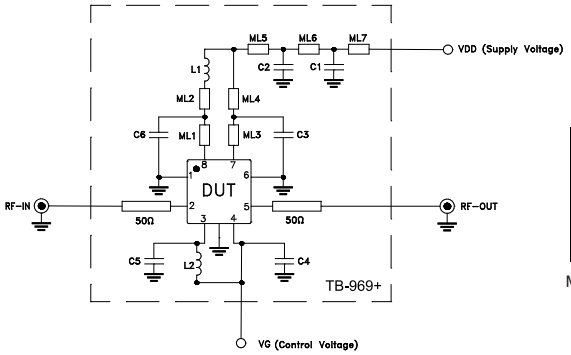


| Component | P/N | SUPPLIER | Value | Size |
|---|---|---|---|---|
| C1 | GRM1555C1H5R6CA01D | Murata | 5.6pF | 0402 |
| C2 | GRM1555C1H180JA01D | Murata | 18pF | 0402 |
| C3 – C5 | GRM1555C1H102JA01D | Murata | 0.001uF | 0402 |
| C6 | GRM155R71C104KA88D | Murata | 0.1uF | 0402 |
| L1 , L2 | 0805CS-030XJLC | Coilcraft | 3.3nH | 0805 |

ML1 to ML7 are short mircrostrip lines. Refer to PL-588

**Fig 1**. Block diagram of Test Circuit used for characterization. (DUT soldered on Mini-Circuits Characterization test board TB-969+)

Gain, Return loss, Output power at 1dB compression (P1dB) , output IP3 (OIP3) and noise figure measured using Agilent's N5242A PNA-X microwave network analyzer.

**Conditions:**

1. Gain and Return loss: Pin= -25dBm
2. Output IP3 (OIP3): Two tones, spaced 1 MHz apart, +9dBm/tone at output.
3. Switching Time: Pin=7dBm at 5.2 GHz. $V_G$=Pulse signal at 1 KHz, -5V, with offset=-2.5V, 50% duty cycle. $V_{DD}$=5V.

## Product Marking

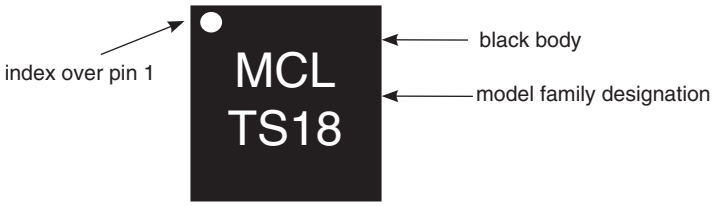


Marking may contain other features or characters for internal lot control

| Additional Detailed Technical Information<br>*additional information is available on our dash board. To access this information click here* | |
|---|---|
| **Performance Data** | Data Table |
| | Swept Graphs |
| | S-Parameter (S2P Files) Data Set (.zip file) |
| **Case Style** | DQ849 *Plastic package, exposed paddle, lead finish: matte-tin* |
| **Tape & Reel**<br>**Standard quantities available on reel** | F104<br>*7" reels with 10, 20, 50, 100, 200, 500, 1000 or 2000 devices.* |
| **Suggested Layout for PCB Design** | PL-588 |
| **Evaluation Board** | TB-969+ |
| **Environmental Ratings** | ENV08T1 |

## ESD Rating

Human Body Model (HBM): 1A (250 to <500V) in accordance with ANSI/ESD STM 5.1 - 2001

## MSL Test Flow Chart

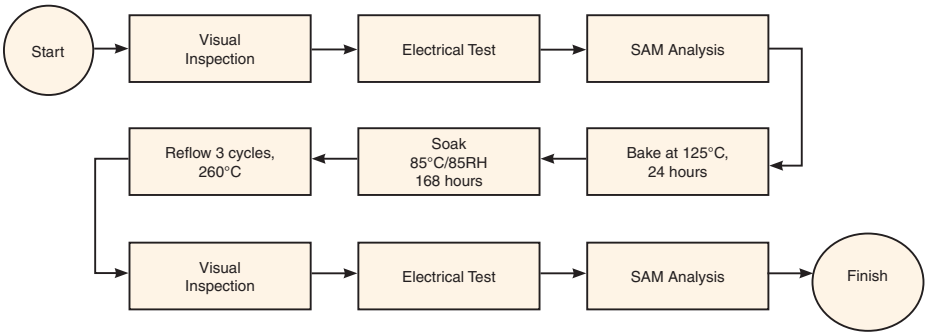


### Additional Notes

A. Performance and quality attributes and conditions not expressly stated in this specification document are intended to be excluded and do not form a part of this specification document.

B. Electrical specifications and performance data contained in this specification document are based on Mini-Circuit's applicable established test performance criteria and measurement instructions.

C. The parts covered by this specification document are subject to Mini-Circuits standard limited warranty and terms and conditions (collectively, "Standard Terms"); Purchasers of this part are entitled to the rights and benefits contained therein. For a full statement of the Standard Terms and the exclusive rights and remedies thereunder, please visit Mini-Circuits' website at www.minicircuits.com/MCLStore/terms.jsp