TAIWAN SEMICONDUCTOR

RoHS COMPLIANCE

TSM6981D

20V Dual P-Channel MOSFET

TSSOP-8

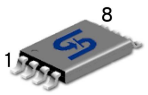

Pin Definition:

1. Drain 1	8. Drain 2
2. Source 1	7. Source 2
3. Source 1	6. Source 2
4. Gate 1	5. Gate 2

PRODUCT SUMMARY

V_{DS} (V)	$R_{DS(on)}$(mΩ)	I_D (A)
-20	40 @ V_{GS} = -4.5V	-5
	50 @ V_{GS} = -2.5V	-4
	60 @ V_{GS} = -1.8V	-3

Features

- Advance Trench Process Technology
- High Density Cell Design for Ultra Low On-resistance

Application

- Load Switch
- PA Switch

Block Diagram

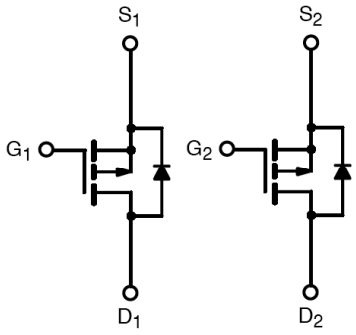

Dual P-Channel MOSFET

Ordering Information

Part No.	Package	Packing
TSM6981DCA RV	TSSOP-8	3Kpcs / 13” Reel
TSM6981DCA RVG	TSSOP-8	3Kpcs / 13” Reel

Note: “G” denote for Halogen Free Product

Absolute Maximum Rating (Ta = 25°C unless otherwise noted)

Parameter		Symbol	Limit	Unit
Drain-Source Voltage		V_{DS}	-20	V
Gate-Source Voltage		V_{GS}	±8	V
Continuous Drain Current, V_{GS} @4.5V.		I_D	-5	A
Pulsed Drain Current, V_{GS} @4.5V		I_{DM}	-30	A
Continuous Source Current (Diode Conduction)[a,b]		I_S	-1.0	A
Maximum Power Dissipation	Ta = 25°C	P_D	1.14	W
	Ta = 70°C		0.73	
Operating Junction Temperature		T_J	+150	°C
Operating Junction and Storage Temperature Range		T_J, T_{STG}	- 55 to +150	°C

Thermal Performance

Parameter	Symbol	Limit	Unit
Junction to Foot (Drain) Thermal Resistance	$R\Theta_{JF}$	40	°C/W
Junction to Ambient Thermal Resistance (PCB mounted)	$R\Theta_{JA}$	75	°C/W

Notes:

a. Surface Mounted on 1” x 1” FR4 Board.

b. Pulse width limited by maximum junction temperature

TSM6981D

20V Dual P-Channel MOSFET

Electrical Specifications (Ta = 25°C unless otherwise noted)

Parameter	Conditions	Symbol	Min	Typ	Max	Unit
Static						
Drain-Source Breakdown Voltage	V_{GS} = 0V, I_D = - 250uA	BV_{DSS}	-20	--	--	V
Gate Threshold Voltage	V_{DS} = V_{GS}, I_D = - 250uA	$V_{GS(TH)}$	-0.4	--	-1.0	V
Zero Gate Voltage Drain Current	V_{DS} = -16V, V_{GS} = 0V	I_{DSS}	--	--	-1.0	uA
Gate Body Leakage	V_{GS} = ±8V, V_{DS} = 0V	I_{GSS}	--	--	±100	nA
On-State Drain Current	V_{DS} ≤-5V, V_{GS} = -4.5V	$I_{D(ON)}$	-20	--	--	A
Drain-Source On-State Resistance	V_{GS} = -4.5V, I_D = -5A	$R_{DS(ON)}$	--	30	40	mΩ
	V_{GS} = -2.5V, I_D = -4A		--	40	50	
	V_{GS} = -1.8V, I_D = -3A		--	50	60	
Forward Transconductance	V_{DS} = - 5V, I_D = - 5A	g_{fs}	--	17	--	S
Diode Forward Voltage	I_S = - 1.0A, V_{GS} = 0V	V_{SD}	--	- 0.6	-1.2	V
Dynamic[b]						
Total Gate Charge	V_{DS} = -10V, I_D = -4.7A, V_{GS} = -4.5V	Q_g	--	12.5	19	nC
Gate-Source Charge		Q_{gs}	--	1.7	--	
Gate-Drain Charge		Q_{gd}	--	3.3	--	
Input Capacitance	V_{DS} = -10V, V_{GS} = 0V, f = 1.0MHz	C_{iss}	--	1020	--	pF
Output Capacitance		C_{oss}	--	191	--	
Reverse Transfer Capacitance		C_{rss}	--	140	--	
Switching[c]						
Turn-On Delay Time	V_{DD} = -10V, R_L = 10Ω, I_D = -1A, V_{GEN} = -4.5V, R_G = 6Ω	$t_{d(on)}$	--	25	40	nS
Turn-On Rise Time		t_r	--	43	65	
Turn-Off Delay Time		$t_{d(off)}$	--	71	110	
Turn-Off Fall Time		t_f	--	48	75	

Notes:
a. pulse test: PW ≤300μS, duty cycle ≤2%
b. For DESIGN AID ONLY, not subject to production testing.
b. Switching time is essentially independent of operating temperature.

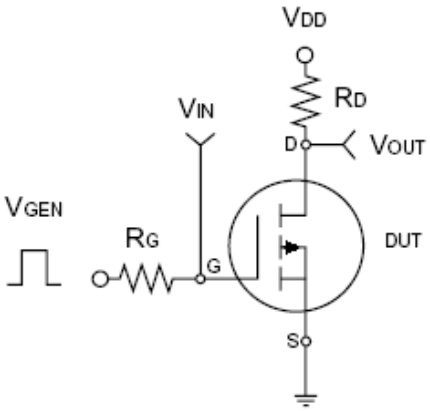

Switching Test Circuit

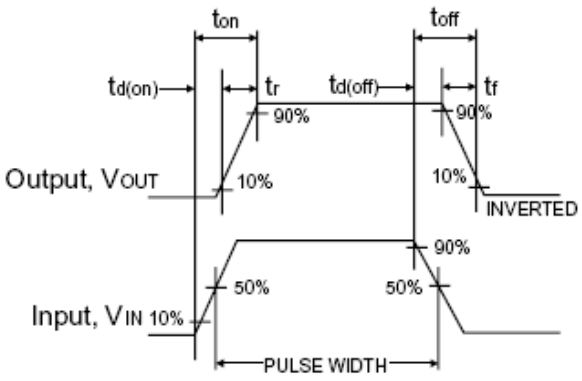

Switchin Waveforms

TSM6981D
20V Dual P-Channel MOSFET

Electrical Characteristics Curve (Ta = 25°C, unless otherwise noted)

Output Characteristics

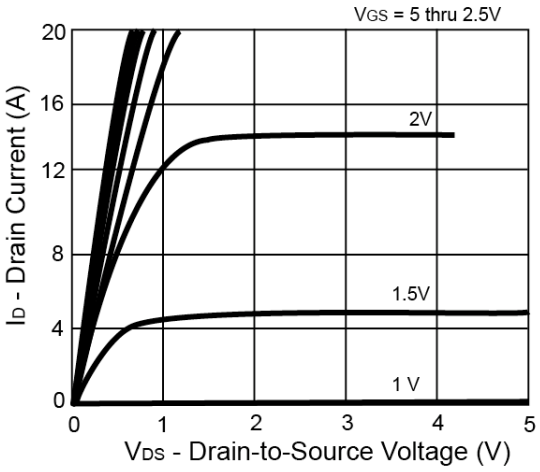

Transfer Characteristics

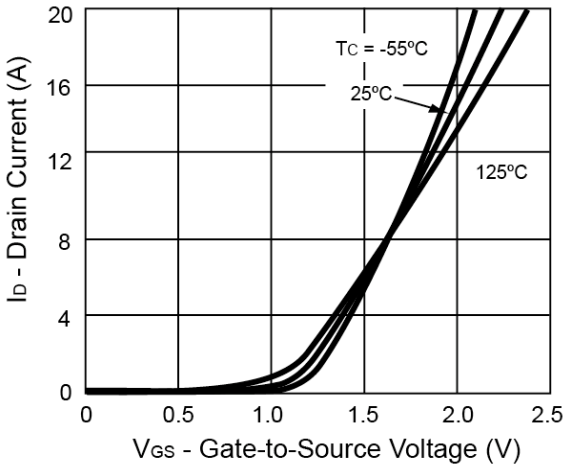

On-Resistance vs. Drain Current

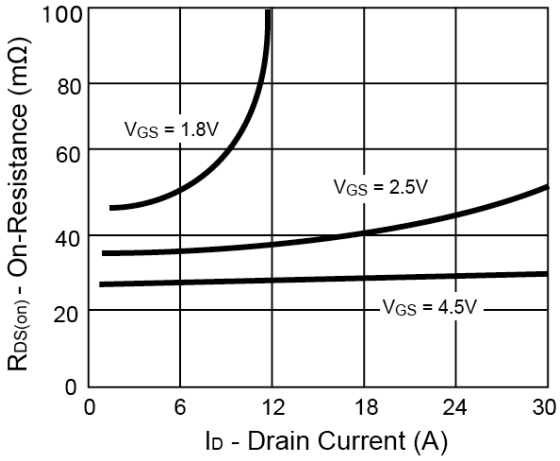

Gate Charge

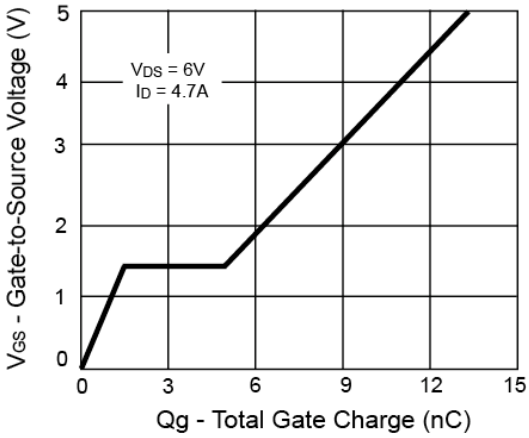

On-Resistance vs. Junction Temperature

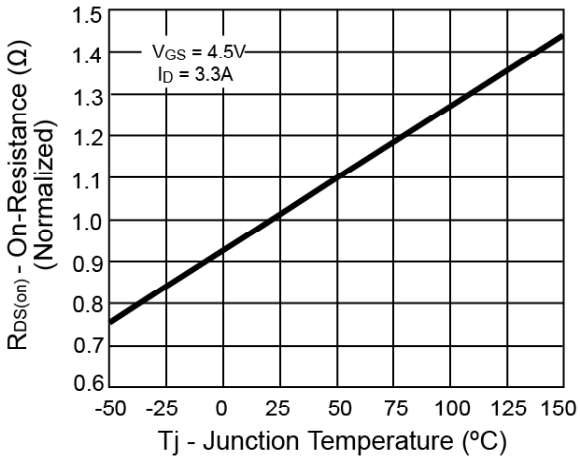

Source-Drain Diode Forward Voltage

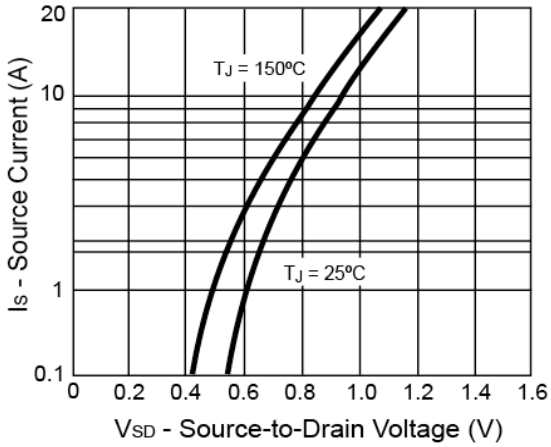

Electrical Characteristics Curve (Ta = 25°C, unless otherwise noted)

On-Resistance vs. Gate-Source Voltage

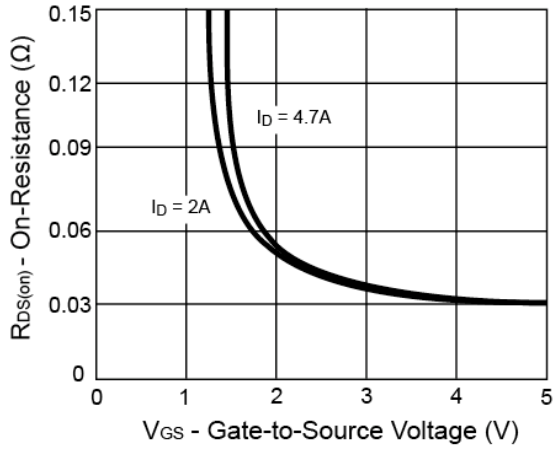

Threshold Voltage

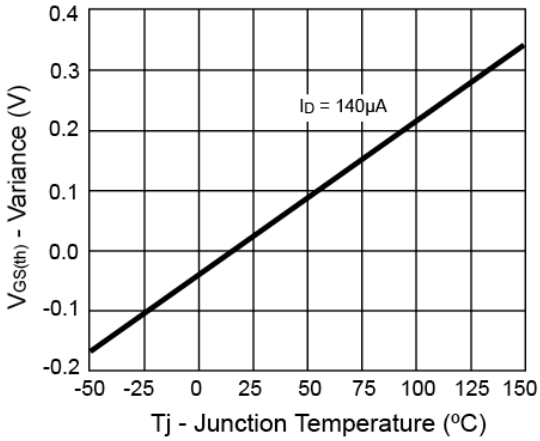

Single Pulse Power

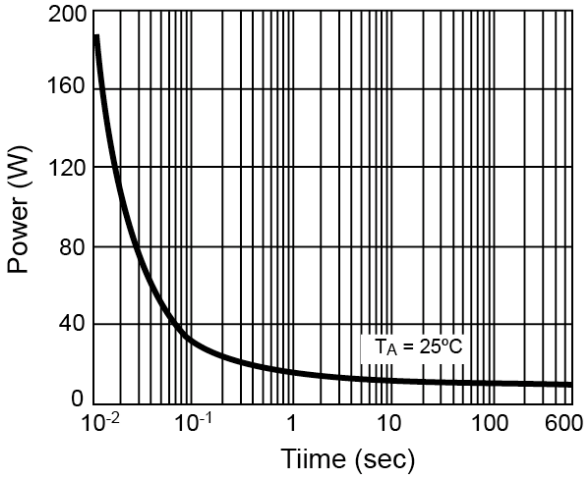

Normalized Thermal Transient Impedance, Junction-to-Ambient

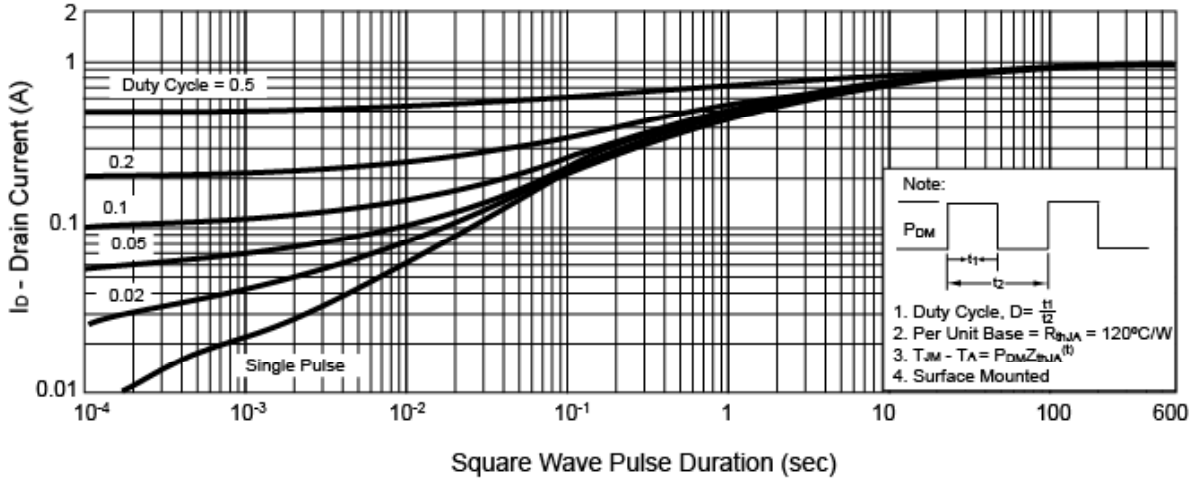

TSM6981D
20V Dual P-Channel MOSFET

TSSOP-8 Mechanical Drawing

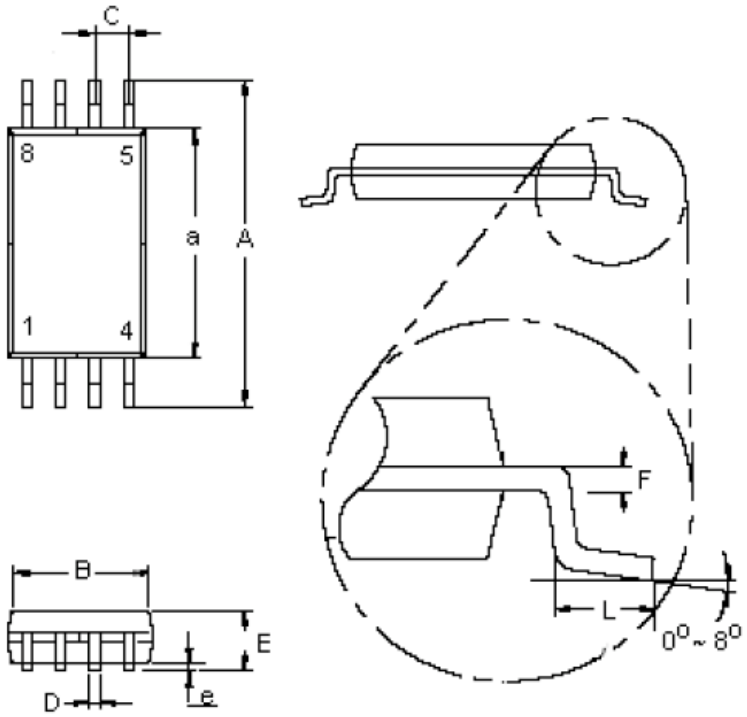

TSSOP-8 DIMENSION				
DIM	MILLIMETERS		INCHES	
	MIN	MAX	MIN	MAX
A	6.20	6.60	0.244	0.260
a	4.30	4.50	0.170	0.177
B	2.90	3.10	0.114	0.122
C	0.65 (typ)		0.025 (typ)	
D	0.25	0.30	0.010	0.019
E	1.05	1.20	0.041	0.049
e	0.05	0.15	0.002	0.009
F	0.127		0.005	
L	0.50	0.70	0.020	0.028

Marking Diagram

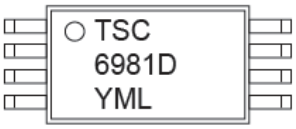

Y = Year Code
M = Month Code
(**A**=Jan, **B**=Feb, **C**=Mar, **D**=Apl, **E**=May, **F**=Jun, **G**=Jul, **H**=Aug, **I**=Sep, **J**=Oct, **K**=Nov, **L**=Dec)
= Month Code for Halogen Free Product
(**O**=Jan, **P**=Feb, **Q**=Mar, **R**=Apl, **S**=May, **T**=Jun, **U**=Jul, **V**=Aug, **W**=Sep, **X**=Oct, **Y**=Nov, **Z**=Dec)
L = Lot Code

Notice

Specifications of the products displayed herein are subject to change without notice. TSC or anyone on its behalf, assumes no responsibility or liability for any errors or inaccuracies.

Information contained herein is intended to provide a product description only. No license, express or implied, to any intellectual property rights is granted by this document. Except as provided in TSC's terms and conditions of sale for such products, TSC assumes no liability whatsoever, and disclaims any express or implied warranty, relating to sale and/or use of TSC products including liability or warranties relating to fitness for a particular purpose, merchantability, or infringement of any patent, copyright, or other intellectual property right.

The products shown herein are not designed for use in medical, life-saving, or life-sustaining applications. Customers using or selling these products for use in such applications do so at their own risk and agree to fully indemnify TSC for any damages resulting from such improper use or sale.