TSL250R, TSL251R, TSL252R

Light-to-Voltage Optical Sensors

General Description

The TSL250R, TSL251R, and TSL252R are light-to-voltage optical sensors, each combining a photodiode and a transimpedance amplifier (feedback resistor = 16MΩ, 8MΩ, and 2.8MΩ respectively) on a single monolithic IC. Output voltage is directly proportional to the light intensity (irradiance) on the photodiode. These devices have improved amplifier offset-voltage stability and low power consumption and are supplied in a 3-lead clear plastic sidelooker package with an integral lens. When supplied in the lead (Pb) free package, the device is RoHS compliant.

Ordering Information and Content Guide appear at end of datasheet.

Key Benefits & Features

The benefits and features of TSL250R, TSL251R, and TSL252R light-to-voltage optical sensors are listed below:

Figure 1:
Added Value of Using TSL250R, TSL251R, and TSL252R

Benefits	Features
• Enables Extremely Fast Response to Change	• Single Photo-Diode and Transimpedance Architecture
• Enables Fast Response to Visible Light in Range of 400nm to 700nm Wavelengths	• 260µs Output Rise-Time Response (TSL250R)
• Provides for High Sensitivity to Detect a Small Change in Light	• High Irradiance Responsivity 137mV/(µW/cm^2) @ λp = 635nm (TSL250R)
• Provides Additional Sensitivity Advantages	• 2x Gain Lens

- Monolithic silicon IC containing photodiode, operational amplifier, and feedback components
- Converts light intensity to a voltage
- Compact 3-lead clear plastic package
- Single voltage supply operation
- Low dark (offset) voltage... 10mV max
- Low supply current... 1.1mA typical
- Wide supply-voltage range... 2.7V to 5.5V
- Replacements for TSL250, TSL251, and TSL252
- RoHS compliant

Functional Block Diagram

The functional blocks of this device are shown below:

Figure 2:
TSL250R, TSL251R, and TSL252R Block Diagram

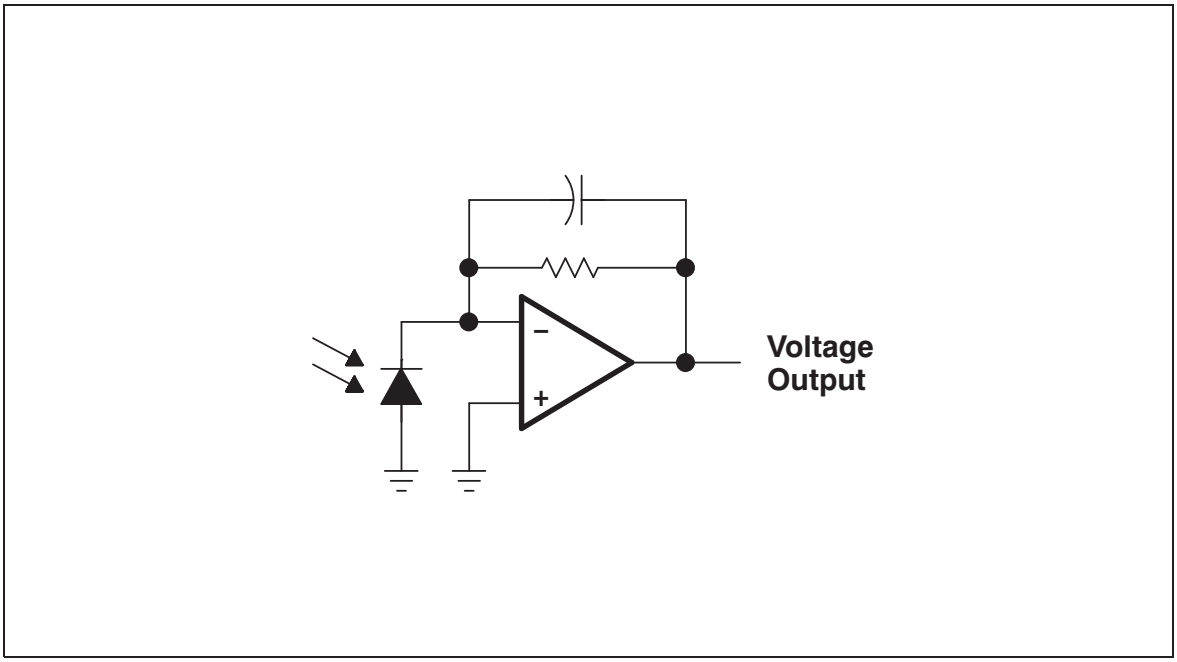

Pin Assignment

The TSL250R, TSL251R, and TSL252R pin assignments are described below.

Figure 3:
Pin Diagram

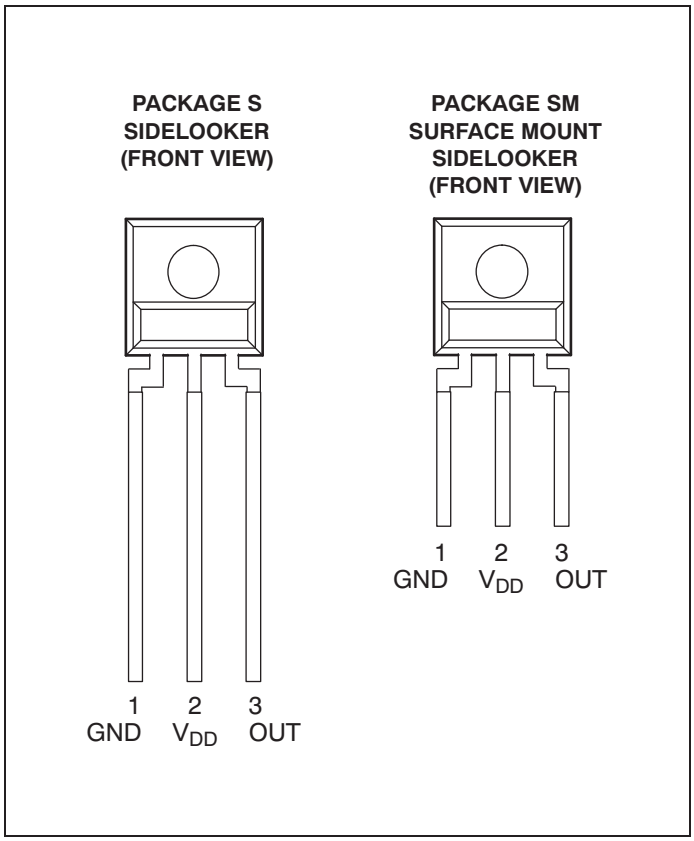

Figure 4:
Terminal Functions

Terminal		Description
No.	Name	
1	GND	Ground (substrate). All voltages are referenced to GND.
2	V_{DD}	Supply voltage
3	OUT	Output voltage

Absolute Maximum Ratings

Stresses beyond those listed under Absolute Maximum Ratings may cause permanent damage to the device. These are stress ratings only. Functional operation of the device at these or any other conditions beyond those indicated under Recommended Operating Conditions is not implied. Exposure to absolute maximum rating conditions for extended periods may affect device reliability.

Figure 5:
Absolute Maximum Ratings Over Operating Free-Air Temperature Range (unless otherwise noted)

Symbol	Parameter	Min	Max	Unit
V_{DD}	Supply voltage (1)		6	V
I_O	Output current		±10	mA
	Duration of short-circuit current at (or below) 25°C (2)		5	s
T_A	Operating free-air temperature range	-25	85	°C
T_{STRG}	Storage temperature range	-25	85	°C
	Lead temperature 1.6mm (1/16 inch) from case for 10 seconds (S Package)		260	°C
	Reflow solder, in accordance with J-STD-020C or J-STD-020D (SM Package)		260	°C

Note(s):

1. All voltages are with respect to GND.
2. Output may be shorted to supply.

Electrical Characteristics

All limits are guaranteed. The parameters with min and max values are guaranteed with production tests or SQC (Statistical Quality Control) methods.

Figure 6:
Recommended Operating Conditions

Symbol	Parameter	Min	Nom	Max	Unit
V_{DD}	Supply voltage	2.7		5.5	V
T_A	Operating free-air temperature	0		70	°C

Figure 7:
Electrical Characteristics at V_{DD} = 5V, T_A = 25°C, λ_p = 635nm, R_L = 10kΩ (unless otherwise noted) (1), (2), (3)

Symbol	Parameter	Test Conditions	TSL250R			TSL251R			TSL252R			Unit
			Min	Typ	Max	Min	Typ	Max	Min	Typ	Max	
V_D	Dark voltage	E_e = 0	0	4	10	0	4	10	0	4	10	mV
V_{OM}	Maximum output voltage	V_{DD} = 4.5V	3.0	3.3		3.0	3.3		3.0	3.3		V
V_O	Output voltage	E_e = 14.6µW/cm^2	1.5	2	2.5							V
		E_e = 38.5µW/cm^2				1.5	2	2.5				
		E_e = 196µW/cm^2							1.5	2	2.5	
α_{VO}	Temperature coefficient of output voltage (V_O)	E_e = 14.6µW/cm^2		1.6								mV/°C
		T_A = 0°C to 70°C		0.08								%/°C
		E_e = 38.5µW/cm^2					1.6					mV/°C
		T_A = 0°C to 70°C					0.08					%/°C
		E_e = 196µW/cm^2								1.6		mV/°C
		T_A = 0°C to 70°C								0.08		%/°C
N_e	Irradiance responsivity	λ_p = 635 nm (3), (5)		137			52			10.2		mV/(µW/cm^2)
		λ_p = 880nm (4), (5)		127			48			9.4		

Symbol	Parameter	Test Conditions	TSL250R			TSL251R			TSL252R			Unit
			Min	Typ	Max	Min	Typ	Max	Min	Typ	Max	
I_{DD}	Supply current	E_e = 14.6µW/cm^2		1.1	1.7							mA
		E_e = 38.5µW/cm^2					1.1	1.7				
		E_e = 196µW/cm^2								1.1	1.7	

Note(s):

1. Measurements are made with R_L = 10kΩ between output and ground.
2. Optical measurements are made using small-angle incident radiation from an LED optical source.
3. The input irradiance E_e is supplied by an AlInGaP LED with peak wavelength λ_p = 635nm.
4. The input irradiance E_e is supplied by an GaAlAs LED with peak wavelength λ_p = 880nm.
5. Irradiance responsivity is characterized over the range V_O = 0.05 to 2.9V. The best-fit straight line of Output Voltage V_O versus irradiance E_e over this range will typically have a positive extrapolated V_O value forE_e = 0.

Figure 8:
Dynamic Characteristics at T_A = 25°C (see Figure 9)

Symbol	Parameter	Test Conditions	TSL250R			TSL251R			TSL252R			Unit
			Min	Typ	Max	Min	Typ	Max	Min	Typ	Max	
t_r	Output pulse rise time	V_{DD} = 5V, λ_p = 635nm		260			70			7		µs
t_f	Output pulse fall time	V_{DD} = 5V, λ_p = 635nm		260			70			7		µs
V_n	Output noise voltage	V_{DD} = 5V, E_e = 0, f = 1000Hz		0.8			0.7			0.6		$\mu V/\sqrt{Hz}$

Parameter Measurement Information

Figure 9:
Switching Times

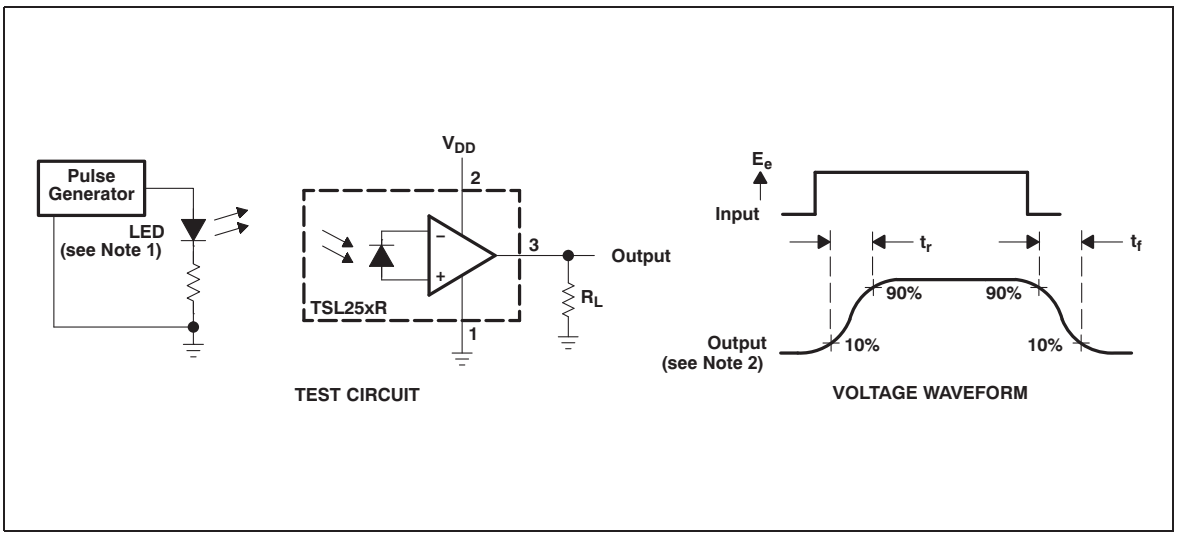

Note(s):

1. The input irradiance is supplied by a pulsed AlInGaP light-emitting diode with the following characteristics: λ_p = 635nm, t_r < 1µs, t_f < 1µs.
2. The output waveform is monitored on an oscilloscope with the following characteristics: t_r < 100ns, Z_i ≥ 1MΩ, C_i ≤ 20pF.

Typical Characteristics

Figure 10:
Normalized Output Voltage vs. Angular Displacement

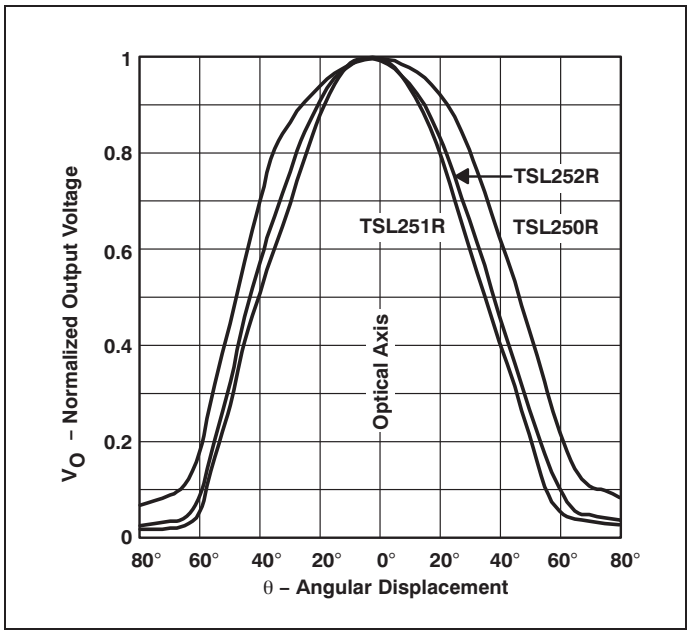

Figure 11:
Output Voltage vs. Irradiance

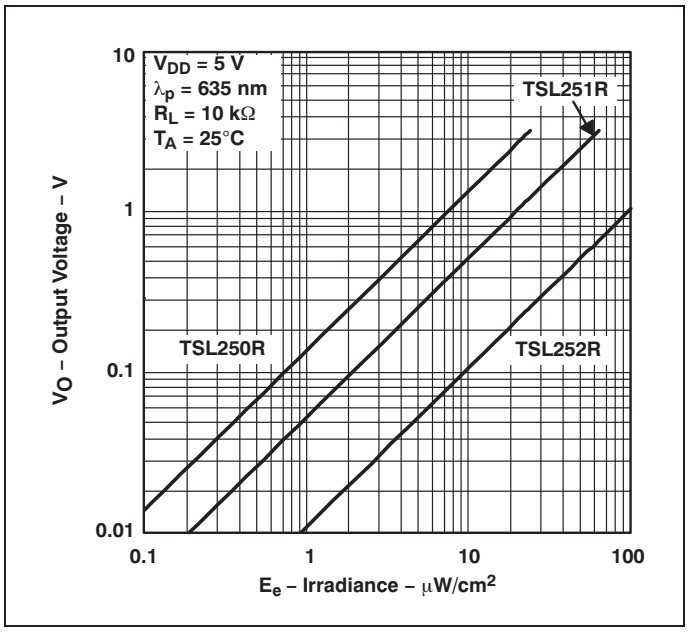

Figure 12:
Photodiode Spectral Responsivity

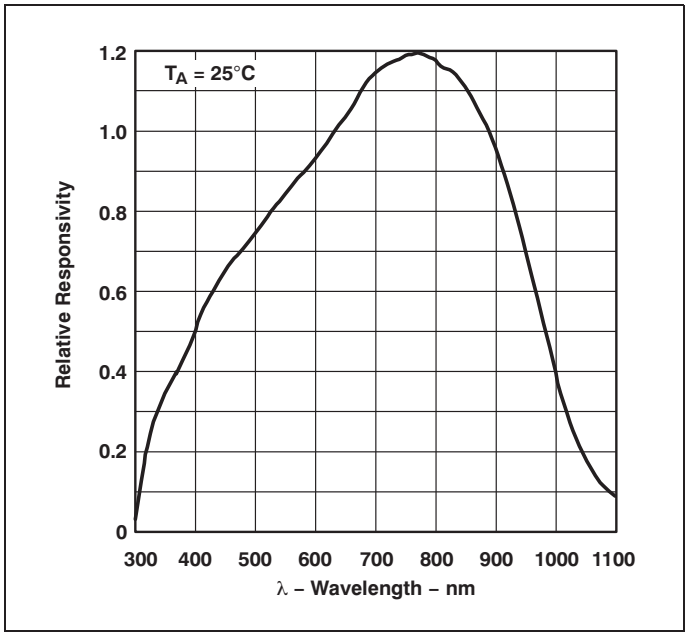

Figure 13:
Maximum Output Voltage vs. Supply Voltage

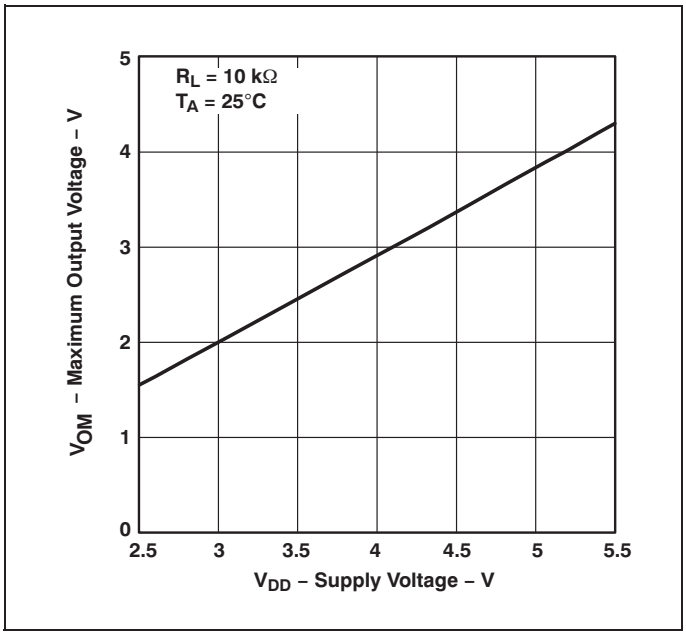

Figure 14:
Supply Current vs. Output Voltage

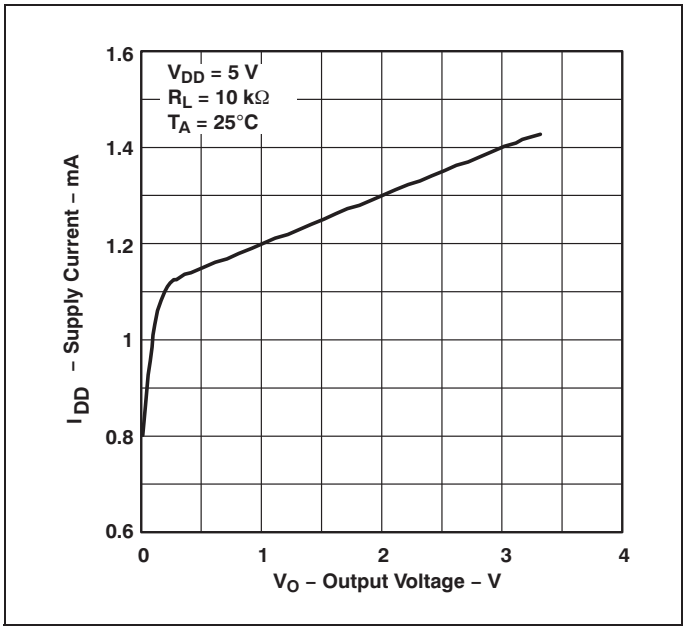

Application Information

PCB Pad Layout

Suggested PCB pad layout guidelines for the SM surface mount package are shown in Figure 15.

Figure 15:
Suggested SM Package PCB Layout

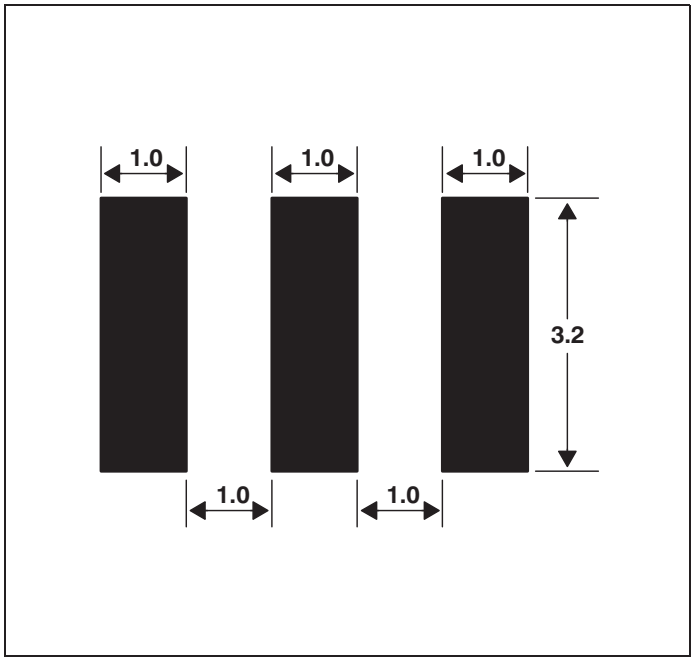

Note(s):

1. All linear dimensions are in millimeters.
2. This drawing is subject to change without notice.

Mechanical Information

The devices are supplied in a clear plastic three-lead package (S). The integrated photodiode active area is typically 1.0mm^2 (0.0016in^2) for TSL250R, 0.5mm^2 (0.00078in^2) for the TSL251R, and 0.26mm^2 (0.0004in^2) for the TSL252R.

Plastic Single-In-Line Side-Looker Package

Figure 16:
Plastic Single-In-Line Side-Looker Package Configuration

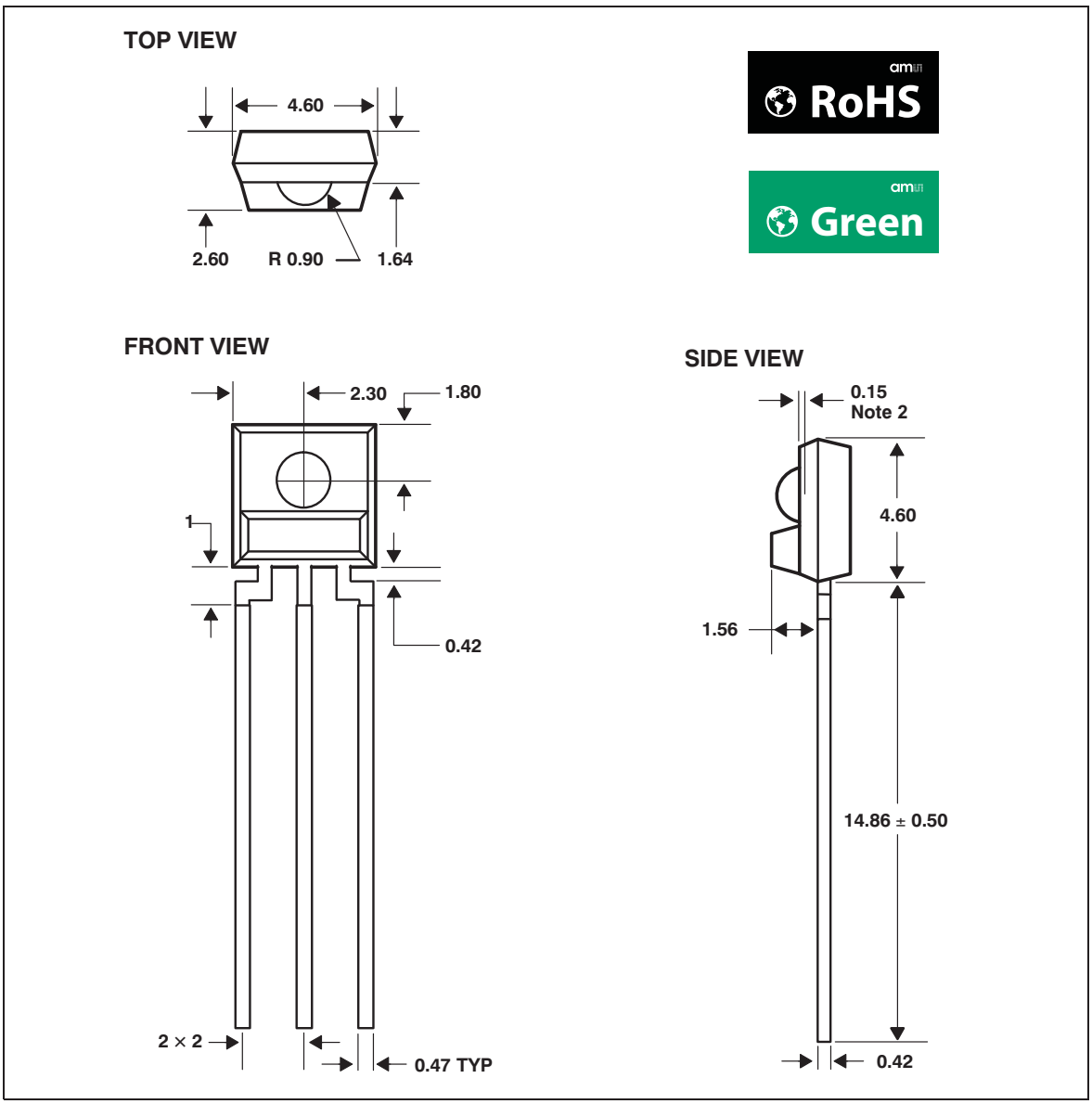

Note(s):

1. All linear dimensions are in millimeters; tolerance is ±0.25mm unless otherwise stated.
2. Dimension is to center of lens arc, which is located below the package face.
3. The integrated photodiode active area is typically located in the center of the lens and 0.97mm below the top of the lens surface.
4. Index of refraction of clear plastic is 1.55.
5. Lead finish for TSL25xR-LF: solder dipped, 100% Sn.
6. This drawing is subject to change without notice.

Plastic Surface Mount Side-Looker Package

Figure 17:
Package SM - Plastic Surface Mount Side-Looker Package Configuration

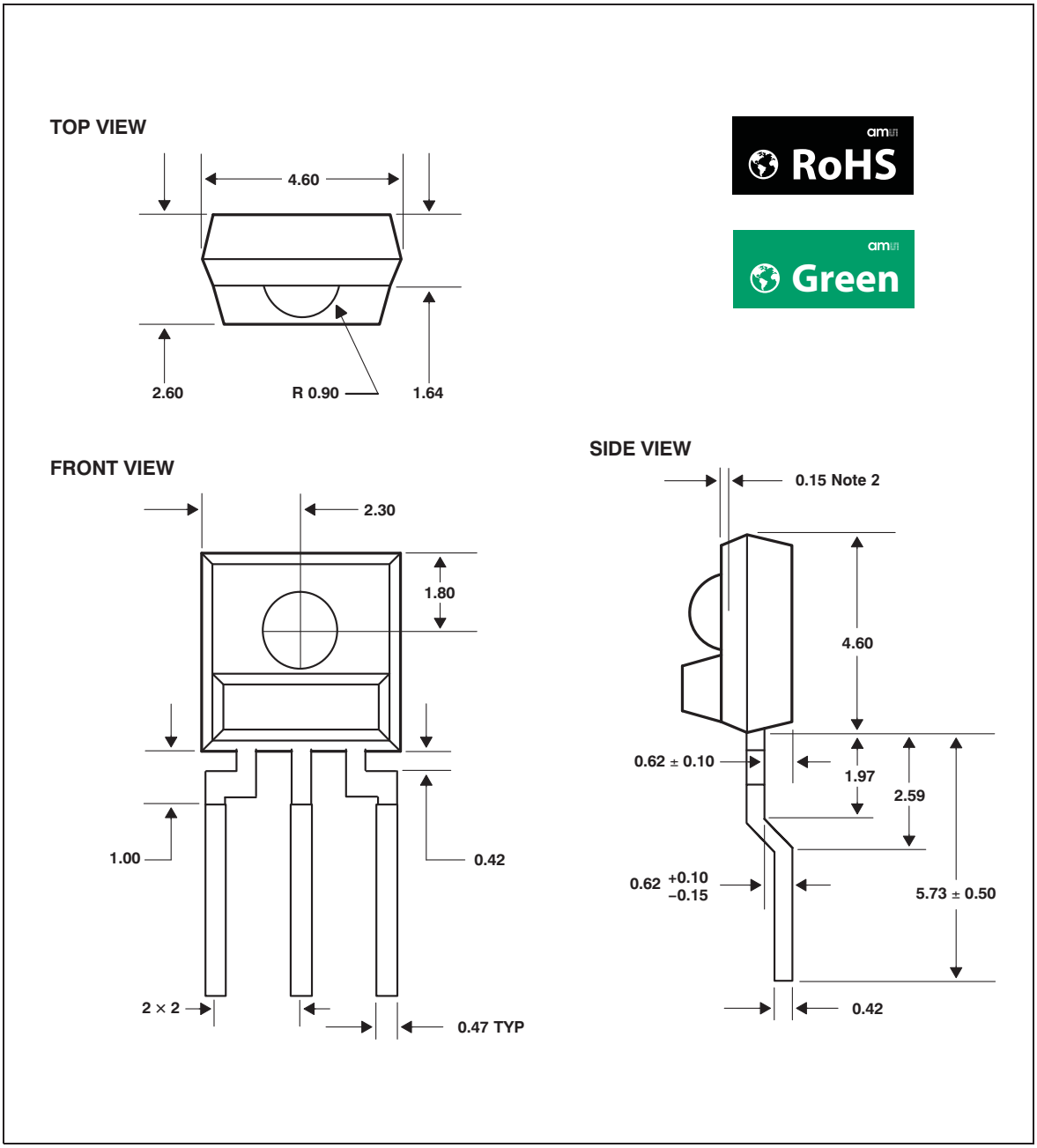

Note(s):

1. All linear dimensions are in millimeters; tolerance is ±0.25mm unless otherwise stated.
2. Dimension is to center of lens arc, which is located below the package face.
3. The integrated photodiode active area is typically located in the center of the lens and 0.97mm below the top of the lens surface.
4. Index of refraction of clear plastic is 1.55.
5. Lead finish for TSL25xRSM-LF: solder dipped, 100% Sn.
6. This drawing is subject to change without notice.

Ordering & Contact Information

Figure 18:
Ordering Information

Ordering Code	Device	T_A	Package-Leads	Package Designator
TSL250R-LF	TSL250R	0°C to 70°C	3-lead Sidelooker - Lead (Pb) Free	S
TSL250RSM-LF	TSL250R	0°C to 70°C	3-lead Surface-Mount Sidelooker - Lead (Pb) Free	SM
TSL251R-LF	TSL251R	0°C to 70°C	3-lead Sidelooker - Lead (Pb) Free	S
TSL251RSM-LF	TSL251R	0°C to 70°C	3-lead Surface-Mount Sidelooker - Lead (Pb) Free	SM
TSL252R-LF	TSL252R	0°C to 70°C	3-lead Sidelooker - Lead (Pb) Free	S
TSL252RSM-LF	TSL252R	0°C to 70°C	3-lead Surface-Mount Sidelooker - Lead (Pb) Free	SM

Buy our products or get free samples online at:
www.ams.com/ICdirect

Technical Support is available at:
www.ams.com/Technical-Support

Provide feedback about this document at:
www.ams.com/Document-Feedback

For further information and requests, e-mail us at:
ams_sales@ams.com

For sales offices, distributors and representatives, please visit:
www.ams.com/contact

Headquarters
ams AG
Tobelbaderstrasse 30
8141 Premstaetten
Austria, Europe

Tel: +43 (0) 3136 500 0

Website: www.ams.com

RoHS Compliant & ams Green Statement

RoHS: The term RoHS compliant means that ams AG products fully comply with current RoHS directives. Our semiconductor products do not contain any chemicals for all 6 substance categories, including the requirement that lead not exceed 0.1% by weight in homogeneous materials. Where designed to be soldered at high temperatures, RoHS compliant products are suitable for use in specified lead-free processes.

ams Green (RoHS compliant and no Sb/Br): ams Green defines that in addition to RoHS compliance, our products are free of Bromine (Br) and Antimony (Sb) based flame retardants (Br or Sb do not exceed 0.1% by weight in homogeneous material).

Important Information: The information provided in this statement represents ams AG knowledge and belief as of the date that it is provided. ams AG bases its knowledge and belief on information provided by third parties, and makes no representation or warranty as to the accuracy of such information. Efforts are underway to better integrate information from third parties. ams AG has taken and continues to take reasonable steps to provide representative and accurate information but may not have conducted destructive testing or chemical analysis on incoming materials and chemicals. ams AG and ams AG suppliers consider certain information to be proprietary, and thus CAS numbers and other limited information may not be available for release.

Copyrights & Disclaimer

Copyright ams AG, Tobelbader Strasse 30, 8141 Premstaetten, Austria-Europe. Trademarks Registered. All rights reserved. The material herein may not be reproduced, adapted, merged, translated, stored, or used without the prior written consent of the copyright owner.

Devices sold by ams AG are covered by the warranty and patent indemnification provisions appearing in its General Terms of Trade. ams AG makes no warranty, express, statutory, implied, or by description regarding the information set forth herein. ams AG reserves the right to change specifications and prices at any time and without notice. Therefore, prior to designing this product into a system, it is necessary to check with ams AG for current information. This product is intended for use in commercial applications. Applications requiring extended temperature range, unusual environmental requirements, or high reliability applications, such as military, medical life-support or life-sustaining equipment are specifically not recommended without additional processing by ams AG for each application. This product is provided by ams AG “AS IS” and any express or implied warranties, including, but not limited to the implied warranties of merchantability and fitness for a particular purpose are disclaimed.

ams AG shall not be liable to recipient or any third party for any damages, including but not limited to personal injury, property damage, loss of profits, loss of use, interruption of business or indirect, special, incidental or consequential damages, of any kind, in connection with or arising out of the furnishing, performance or use of the technical data herein. No obligation or liability to recipient or any third party shall arise or flow out of ams AG rendering of technical or other services.

Document Status

Document Status	Product Status	Definition
Product Preview	Pre-Development	Information in this datasheet is based on product ideas in the planning phase of development. All specifications are design goals without any warranty and are subject to change without notice
Preliminary Datasheet	Pre-Production	Information in this datasheet is based on products in the design, validation or qualification phase of development. The performance and parameters shown in this document are preliminary without any warranty and are subject to change without notice
Datasheet	Production	Information in this datasheet is based on products in ramp-up to full production or full production which conform to specifications in accordance with the terms of ams AG standard warranty as given in the General Terms of Trade
Datasheet (discontinued)	Discontinued	Information in this datasheet is based on products which conform to specifications in accordance with the terms of ams AG standard warranty as given in the General Terms of Trade, but these products have been superseded and should not be used for new designs

Revision Information

Changes from 028H (2007-Sep) to current revision 1-00 (2016-May-30)	Page
Content of TAOS datasheet was converted to the latest **ams** design	
Updated Key Benefits & Features	1
Updated notes under Figure 16	13
Updated Figure 18	15

Note(s):

1. Page and figure numbers for the previous version may differ from page and figure numbers in the current revision.
2. Correction of typographical errors is not explicitly mentioned.

Content Guide

1 General Description
1 Key Benefits & Features
2 Functional Block Diagram

3 Pin Assignment
4 Absolute Maximum Ratings
5 Electrical Characteristics
8 Parameter Measurement Information
9 Typical Characteristics

12 Application Information
12 PCB Pad Layout

13 Mechanical Information
13 Plastic Single-In-Line Side-Looker Package
14 Plastic Surface Mount Side-Looker Package

15 Ordering & Contact Information
16 RoHS Compliant & ams Green Statement
17 Copyrights & Disclaimer
18 Document Status
19 Revision Information