19-0863; Rev 1; 8/96

MAXIM

Dual Power MOSFET Drivers

General Description

The MAX626/7/8 are dual monolithic power MOSFET drivers designed to translate TTL inputs to high voltage/current outputs. The MAX626 is a dual inverting power MOSFET driver. The MAX627 is a dual non-inverting power MOSFET driver, and the MAX628 contains one inverting section and one non-inverting section. Delay times are nearly independent of V_{DD} (See Typical Operating Characteristics). High current output drivers rapidly charge and discharge the gate capacitance of even the largest power MOSFETs to within millivolts of the supply rail. This produces the power MOSFET's minimum ON resistance. The MAX626/7/8's high speed minimizes power losses in switching power supplies and DC-DC converters.

Applications

Switching Power Supplies

DC-DC Converters

Motor Controllers

Pin Diode Drivers

Charge Pump Voltage Inverters

Features

- **Improved Second Source For TSC426/7/8**
- **Fast Rise and Fall Times: Typically 20ns with 1000pF Load**
- **Wide Supply Range: V_{DD} = 4.5 to 18 Volts**
- **Low Power Consumption:**
  7mW with Inputs Low
  150mW with Inputs High
- **TTL/CMOS Input Compatible**
- **Low R_{OUT}: Typically 4Ω**
- **MAX626 is Pin Equivalent to TSC426, DS0026/DS0056**

Ordering Information

PART	TEMP. RANGE	PIN-PACKAGE
MAX626CPA	0°C to +70°C	8 Lead Plastic DIP
MAX626CSA	0°C to +70°C	8 Lead SO
MAX626C/D	0°C to +70°C	Dice
MAX626MJA	-55°C to +125°C	8 Lead CERDIP
MAX627CPA	0°C to +70°C	8 Lead Plastic DIP
MAX627CSA	0°C to +70°C	8 Lead SO
MAX627C/D	0°C to +70°C	Dice
MAX627MJA	-55°C to +125°C	8 Lead CERDIP
MAX628CPA	0°C to +70°C	8 Lead Plastic DIP
MAX628CSA	0°C to +70°C	8 Lead SO
MAX628C/D	0°C to +70°C	Dice
MAX628MJA	-55°C to +125°C	8 Lead CERDIP
TSC426CPA	0°C to +70°C	8 Lead Plastic DIP
TSC426CBA	0°C to +70°C	8 Lead SO
TSC426MJA	-55°C to +125°C	8 Lead CERDIP
TSC427CPA	0°C to +70°C	8 Lead Plastic DIP
TSC427CBA	0°C to +70°C	8 Lead SO
TSC427MJA	-55°C to +125°C	8 Lead CERDIP
TSC428CPA	0°C to +70°C	8 Lead Plastic DIP
TSC428CBA	0°C to +70°C	8 Lead SO
TSC428MJA	-55°C to +125°C	8 Lead CERDIP

Pin Configurations

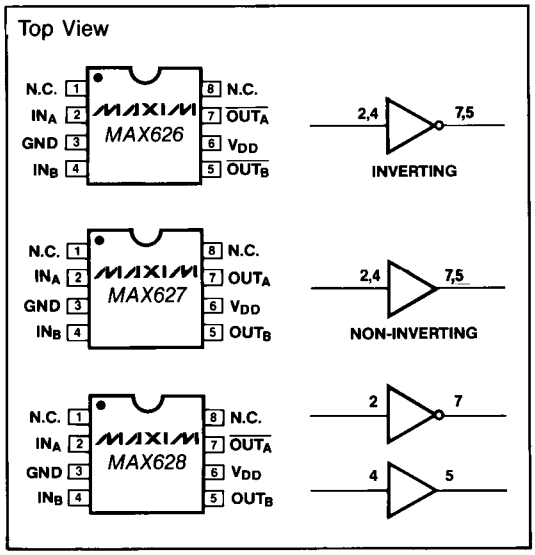

For free samples & the latest literature: http://www.maxim-ic.com, or phone 1-800-998-8800

Dual Power MOSFET Drivers

ABSOLUTE MAXIMUM RATINGS

Supply Voltage V_{DD} to GND ..... +20V
Input Voltage ..... V_{DD} +0.3V to GND -0.3V
Package Dissipation
  Plastic DIP (derate above 70°C by 6.25mW/°C) 500mW
  Small Outline (derate above 70°C by 5.88mW/°C) 450mW
  CERDIP (derate above 70°C by 8.0mW/°C) 640mW
Maximum Chip Temperature ..... +150°C
Storage Temperature ..... -55°C to +160°C
Lead Temperature (10 seconds) ..... +300°C

Stresses above those listed under "Absolute Maximum Ratings" may cause permanent damage to the device. These are stress ratings only and functional operation of the device at these or any other conditions above those indicated in the operational sections of the specification is not implied. Exposure to absolute maximum rating conditions for extended periods may affect device reliability.

ELECTRICAL CHARACTERISTICS—MAX626/7/8 and TSC426/7/8

(V_{DD} = 4.5V to 18V, Over Temperature unless otherwise noted.)

PARAMETER	SYMBOL	CONDITIONS		MIN	TYP	MAX	UNITS
Logic 1 Input Voltage	V_{IH}			2.4			V
Logic 0 Input Voltage	V_{IL}					0.8	V
Input Current	I_{IN}	V_{IN} = 0V to 18V, T_A = 25°C V_{IN} = 0V to 18V		-1 -10		1 10	µA
Output High Voltage	V_{OH}	No Load		V_{DD} -25			V
Output Low Voltage	V_{OL}	No Load				+25	mV
Output Resistance	R_{OUT} (Note 1)	V_{DD} = 18V, T_A = 25°C I_{LOAD} = 10mA	MAX626/7/8 TSC426/7/8		4 10	15 15	Ω
		V_{DD} = 18V Over Temp I_{LOAD} = 10mA	MAX626/7/8 TSC426/7/8		6 13	20 20	
	R_{OUT} (Note 2)	V_{DD} = 18V, T_A = 25°C I_{LOAD} = 10mA	MAX626/7/8 TSC426/7/8		4 6	10 10	
		V_{DD} = 18V Over Temp I_{LOAD} = 10mA	MAX626/7/8 TSC426/7/8		6 8	15 15	
Peak Output Current	I_{PK}	MAX626/7/8, V_{DD} = 18V TSC426/7/8, V_{DD} = 18V			2 1.5		A
Power Supply Current	I_{SUPP}	V_{IN} = +3V both inputs, T_A = 25°C V_{IN} = +3V both inputs V_{IN} = +0V both inputs, T_A = 25°C V_{IN} = +0V both inputs				8 12 0.4 0.6	mA
Rise Time	t_R (Note 3)	T_A = 25°C			20	30	ns
		Over Temp	MAX626/7/8 TSC426/7/8		25 25	40 60	
Fall Time	t_F (Note 3)	T_A = 25°C Over Temp			20 25	30 40	
Delay Time	t_{D1} (Note 3)	T_A = 25°C	MAX626/7/8 TSC426/7/8		20 20	30 40	
		Over Temp	MAX626/7/8 TSC426/7/8		25 25	40 60	
Delay Time	t_{D2} (Note 3)	T_A = 25°C	MAX626/7/8 TSC426/7/8		25 25	50 75	
		Over Temp	MAX626/7/8 TSC426/7/8		30 30	60 120	

Note 1: V_{IN} = 0.8V for inverting stages, V_{IN} = 2.4V for non-inverting stages.
Note 2: V_{IN} = 2.4V for inverting stages, V_{IN} = 0.8V for non-inverting stages.
Note 3: Switching times guaranteed by design, not tested.

Typical Operating Characteristics

RISE AND FALL TIME vs. SUPPLY VOLTAGE

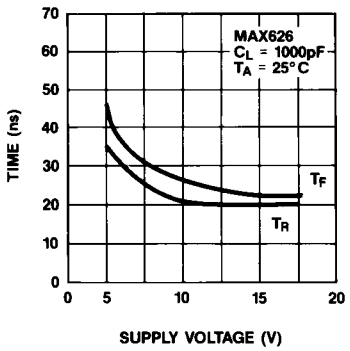

DELAY TIME vs. SUPPLY VOLTAGE

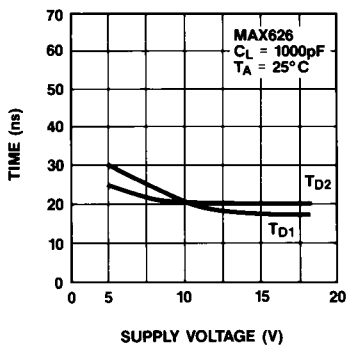

RISE AND FALL TIME vs. TEMPERATURE

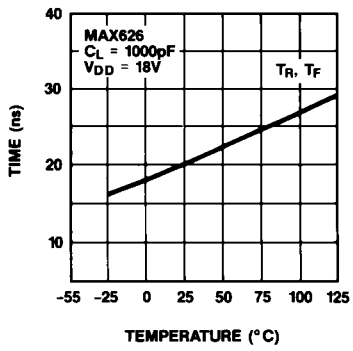

DELAY TIME vs. TEMPERATURE

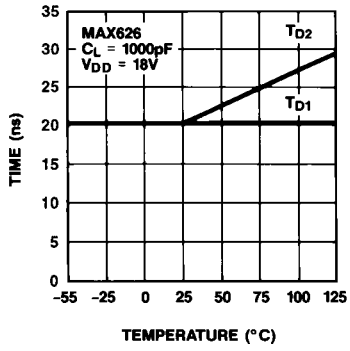

SUPPLY CURRENT vs. CAPACITIVE LOAD

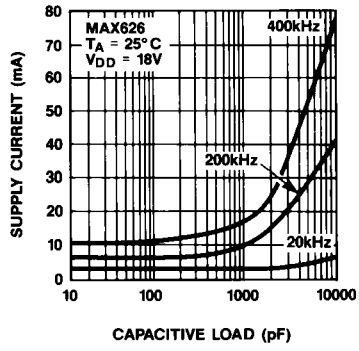

RISE AND FALL TIME vs. CAPACITIVE LOAD

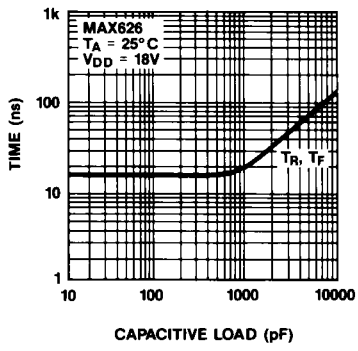

SUPPLY CURRENT vs. FREQUENCY

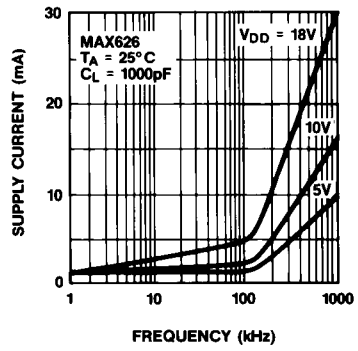

HIGH OUTPUT VOLTAGE

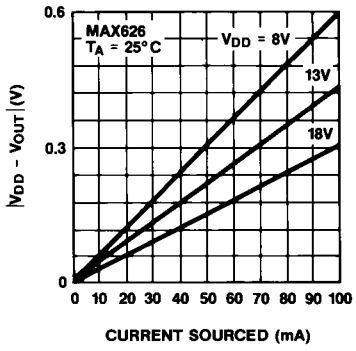

LOW OUTPUT VOLTAGE

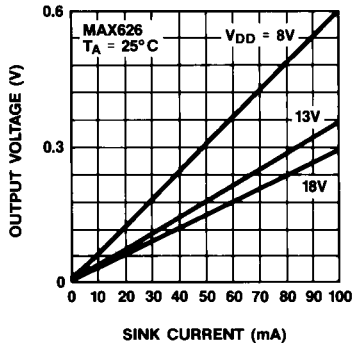

Dual Power MOSFET Drivers

Application Hints

The MAX626/7/8 have an easy to drive input, however, the input must never be allowed to stay between V_{IH} and V_{IL} for more than 50ns. Unused inputs should always be connected to ground to minimize supply current. Drivers can be paralleled on the MAX626 or MAX627 by tying both inputs together and both outputs together.

Supply bypassing and grounding are extremely important with the MAX626/7/8 as the peak supply and output currents can be greater than 2 Amps. Ground drops are a form of negative feedback with inverters and, hence, will degrade the delay and transition time of the MAX626/8. Ringing may also be a problem with large dV/dt and/or large AC currents.

Suggested bypass capacitors are a 4.7μF (low ESR) capacitor in parallel with a 0.1μF ceramic capacitor, mounted as close as possible to the MAX626/7/8. Use a ground plane if possible, or separate ground returns for inputs and outputs. Ringing can be minimized with a 5-20Ω resistor in series with the output but this may degrade output transition time.

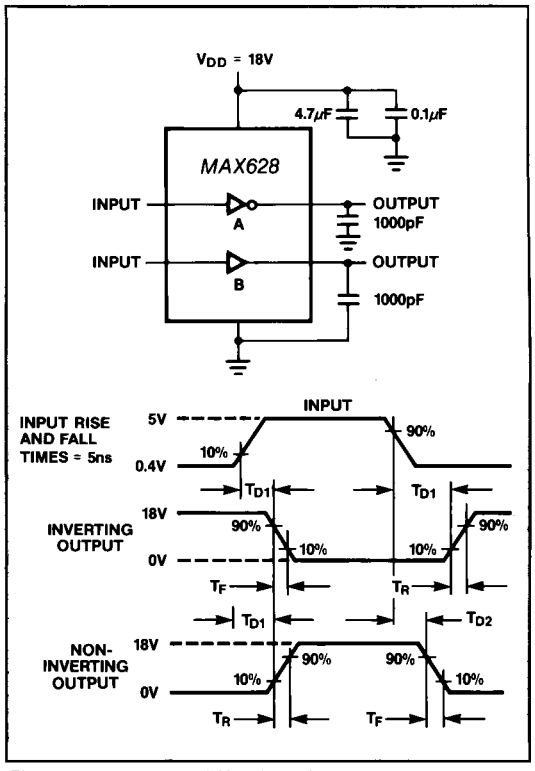

Figure 1. Inverting and Non-inverting Test Circuit

Power Dissipation

Power dissipation of the MAX626/7/8 consists of:

1) Input inverter losses;
2) Crowbar current through the output devices;
3) Output current (either capacitive or resistive).

The sum of these must be kept below the maximum power dissipation limit.

The DC input inverter losses are 0.4mA when both inputs are low and 4mA when both inputs are high.

The Crowbar current through an output device making a transition is approximately 100mA for a few nanoseconds. This is a small portion of the total supply current, except for high switching frequencies or a small load capacitance (100pF).

The MAX626/7/8 power dissipation when driving a ground referenced resistive load is:

$$P = D \times R_{ON(MAX)} \times I_{LOAD}^2$$

where D is the percentage of time the MAX626/7/8 output pulls high, $R_{ON(MAX)}$ is the maximum on resistance of the inverting sections of MAX626/8 with $V_{IN} = V_{IH}$ ($V_{IN} = V_{IL}$ for non-inverting sections), the I_{LOAD} is the load current of the MAX626/7/8.

For capacitive loads, the power dissipation is:

$$P = C_{LOAD} \times V_{DD}^2 \times FREQ$$

where C_{LOAD} is the capacitive load, V_{DD} is the MAX626/7/8 supply voltage, and FREQ is the toggle frequency.

Chip Topography

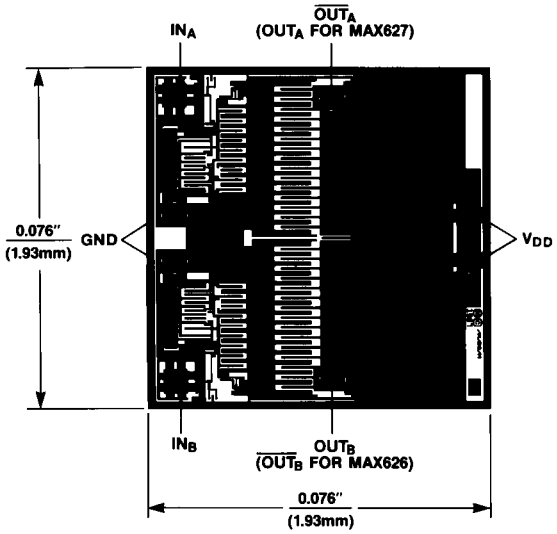

Maxim cannot assume responsibility for use of any circuitry other than circuitry entirely embodied in a Maxim product. No circuit patent licenses are implied. Maxim reserves the right to change the circuitry and specifications without notice at any time.

© 1996 Maxim Integrated Products Printed USA MAXIM is a registered trademark of Maxim Integrated Products.