SERTECH LABS
580 Pleasant Street
Watertown, MA 02172
(617) 924-9280

TSC331
Gate Expander
• Dual 5-Input

Features

- PROVIDES 5 ADDITIONAL INPUTS TO EXPANDABLE GATES, BUFFERS AND OTHER HiNIL DEVICES
- OPTIONAL PULLUP RESISTORS FOR SECOND-LEVEL GATING

General Description

The 331 contains a diode array with the proper characteristics for use on the expander inputs of HiNIL logic devices. In addition, the chip provides two pullup resistors that allow each diode array to be used as a second-level AND gate.

Logic and Schematic Diagrams

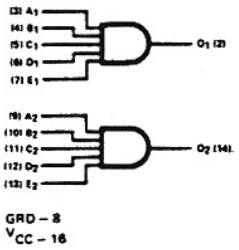

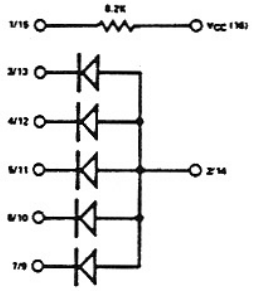

Specifications

331

I_{CC} (WORST-CASE)	4.2 mA @ 13V, 5.2 mA @ 16V

NOTE:
I_{CC} is tested at V_{CC} +1 Volt (+13V for C type and +16V for A type) and is guaranteed across the applicable temp range.
See page 12 for electrical summary data.

Loading Table

331

PINS	FUNCTION	LOADING
A-E	Inputs	1 UL
0	Outputs	

Typical Applications

Each diode presents one unit load to a HiNIL expander input. When used as a second-level gate, the output is connected through the pullup resistor to V_{CC}. Active devices are not used to restore logic levels in second-level gating applications. Instead, the first-level gate's high noise immunity overcomes the drop.

GATE EXPANSION

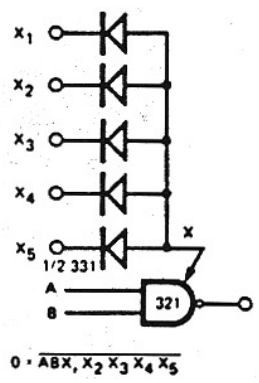

SECOND-LEVEL AND GATE

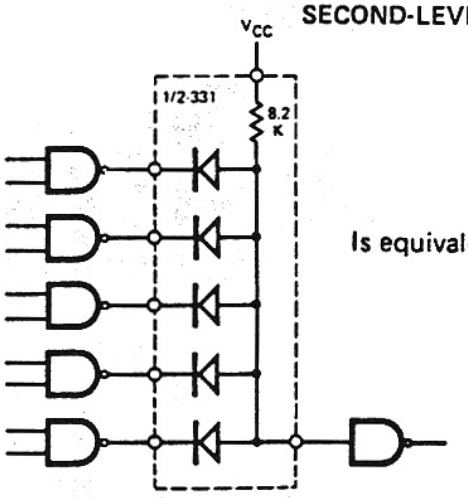

Is equivalent to:

