TSC2046EVM and TSC2046EVM-PDK

This user's guide describes the characteristics, operation, and use of the TSC2046EVM, both by itself and as part of the TSC2046EVM-PDK. This EVM is a 4-wire touch screen controller evaluation module which also has auxiliary inputs and battery and temperature measurement capabilities. A complete circuit description, schematic diagram, and bill of materials are included.

The following related documents are available through the Texas Instruments web site at www.ti.com.

EVM-Compatible Device Data Sheets

Device	Literature Number
TSC2046	SBAS265
TAS1020B	SLES025
REG1117-5	SBVS001
TPS767D318	SLVS209
SN74LVC125A	SCAS290
SN74LVC1G125	SCES223
SN74LVC1G07	SCES296

Contents

1 EVM Overview 2
2 Analog Interface 2
3 Digital Interface 3
4 Power Supplies 3
5 EVM Operation 5
6 Kit Operation 5
7 EVM Bill of Materials and Schematic 10

List of Figures

1 TSC2046EVM-PDK Block Diagram 6
2 Default Software Screen 8

List of Tables

1 Analog Interface Pinout 2
2 Digital Interface Pinout 3
3 Power Supply Pinout 3
4 IOVDD Selection Options - JMP5 4
5 List of Jumpers 5
6 TSC2046EVM Bill of Materials 10
7 USB-MODEVM Bill of Materials 11

1 EVM Overview

1.1 Features

- Full-featured evaluation board for the TSC2046 4-wire, resistive touch screen controller (TSC)
- Modular design for use with a variety of DSP and microcontroller interface boards

The TSC2046EVM-PDK is a complete evaluation kit, which includes a USB-based motherboard and evaluation software for use with a personal computer running Microsoft Windows™ operating systems.

1.2 Introduction

The TSC2046EVM is in Texas Instruments' modular EVM form factor, which allows direct evaluation of the TSC2046 performance and operating characteristics, and eases software development and system prototyping. This EVM is compatible with the 5-6K Interface Board (SLAU104) from Texas Instruments and additional third party boards such as the HPA449 demonstration board from SoftBaugh, Inc. (www.softbaugh.com) and the Speedy33™ from Hyperception, Inc. (www.hyperception.com).

The TSC2046EVM-PDK is a complete evaluation/demonstration kit, which includes a USB-based motherboard called the USB-MODEVM Interface Board and evaluation software for use with a personal computer running Microsoft Windows operating systems.

2 Analog Interface

For maximum flexibility, the TSC2046EVM is designed for easy interfacing to multiple analog sources. Samtec part numbers SSW-110-22-F-D-VS-K and TSM-110-01-T-DV-P provide a convenient 10-pin, dual-row, header/socket combination at J1. This header/socket provides access to the analog input pins of the TSC. Consult Samtec at www.samtec.com or call 1-800-SAMTEC-9 for a variety of mating connector options.

Table 1. Analog Interface Pinout

Pin Number	Signal	Description
J1.2	X+	Touch screen X+ electrode
J1.4	X-	Touch screen X- electrode
J1.6	Y+	Touch screen Y+ electrode
J1.8	Y-	Touch screen Y- electrode
J1.10	VBAT	Battery input, 0V to 6V
J1.12	AUX	Auxiliary input, 0V to VREF
J1.14	Unused	
J1.16	Unused	
J1.18	REF(-)	Tied to analog ground
J1.20	REF(+)	External reference source input (2.5V NOM)
J1.15	Unused	
J1.11-J1.19 (odd)	AGND	Analog ground connections (except J1.15)

Speedy33 is a trademark of Hyperception, Inc..
Microsoft Windows is a trademark of Microsoft Corporation.
WinZip is a trademark of WinZip Computing, Inc..

3 Digital Interface

The TSC2046EVM is designed to easily interface with multiple control platforms. Samtec part numbers SSW-110-22-F-D-VS-K and TSM-110-01-T-DV-P provide a convenient 10-pin, dual-row, header/socket combination at J2. This header/socket provides access to the digital control and serial data pins of the TSC. Consult Samtec at www.samtec.com or call 1-800-SAMTEC-9 for a variety of mating connector options.

Table 2. Digital Interface Pinout

Pin Number	Signal	Description
J2.1	Unused	
J2.2	BUSY	TSC busy flag
J2.3	SCLK	Serial clock
J2.4	DGND	Digital ground
J2.5	SCLKR	Serial clock return (for DSP host systems)
J2.6	Unused	
J2.7	$\overline{SS}$	Slave select - Active low signal, enables data transfer. Frame sync on DSP host systems.
J2.8	Unused	
J2.9	FSR	Frame sync return (for DSP host systems)
J2.10	DGND	Digital ground
J2.11	MOSI	Serial data input to TSC from host
J2.12	Unused	
J2.13	MISO	Serial data output from TSC to host
J2.14	Unused	
J2.15	$\overline{PENIRQ}$	Pen interrupt output from TSC
J2.16	SCL	I^2C bus serial clock
J2.17	Unused	
J2.18	DGND	Digital ground
J2.19	Unused	
J2.20	SDA	I^2C bus data line

4 Power Supplies

J3 provides connection to the common power bus for the TSC2046EVM. Power is supplied on the pins listed in Table 3.

Table 3. Power Supply Pinout

Signal	Pin Number		Signal
Unused	1	2	Unused
+5VA	3	4	Unused
AGND	5	6	DGND
+1.8VD	7	8	+VD1
+3.3VD	9	10	+5VD

When power is supplied to J3, JMP5 allows for one of four different DC voltages to be applied to the digital sections of the TSC. See the schematic and printed circuit board silkscreen for details.

The TSC2046EVM-PDK motherboard (the USB-MODEVM Interface Board) supplies power to J3 of the TSC2046EVM. Power for the motherboard is supplied either through its USB connection or on terminal blocks on the board.

4.1 TSC Power

Power for the TSC2046 VCC can be supplied either from +5V or from +3.3V. JMP4 selects which of these voltages is routed to the TSC2046. When JMP4 is in the default factory condition (shunt on pins 3-4), power to the TSC comes from J3.9 (+3.3VD) through an inductor to prevent digital noise from coupling into the analog supply. When the shunt is installed on JMP4 pins 1-2, power comes from J3.3 (+5VA).

The TSC2046 IOVDD is selected using JMP5. When JMP5 is in the default factory condition (shunt on pins 5-6), IOVDD is set to 3.3V. Other settings are shown in Table 4.

Table 4. IOVDD Selection Options - JMP5

Shunt on pins	IOVDD	Voltage From J3 Pin
1-2	+VD1	8
3-4	+5VD	10
5-6	+3.3V	9
7-8	+1.8V	7

4.2 Stand-Alone Operation

When used as a stand-alone EVM, the analog power can be applied to TP1, referenced to TP2. IOVDD can be applied to TP3, referenced to TP4.

CAUTION
Verify that all power supplies are within the safe operating limits shown on the TSC2046 data sheet before applying power to the EVM.

4.3 USB-MODEVM Interface Power

The USB-MODEVM Interface Board can be powered from several different sources:

- USB
- 6VDC-10VDC AC/DC wall supply (not included)
- Laboratory power supply

When powered from the USB connection, JMP6 should have a shunt from pins 1-2 (this is the default factory configuration). When powered from 6V-10VDC, either through the J8 terminal block or J9 barrel jack, JMP6 should have a shunt installed on pins 2-3. If power is applied in any of these ways, onboard regulators generate the required supply voltages and no further power supplies are necessary.

If laboratory supplies are used to provide the individual voltages required by the USB-MODEVM Interface Board, JMP6 should have no shunt installed. Voltages are then applied to J2 (+5VA), J3 (+5VD), J4 (+1.8VD), and J5 (+3.3VD). The +1.8VD and +3.3VD can also be generated on the board by the onboard regulators from the +5VD supply; to enable this, the SW1 switches need to be set in the ON position (lower position, looking at the board with text reading right-side up) to enable the regulators. If +1.8VD and +3.3VD are supplied externally, disable the onboard regulators by placing the SW1 switches in the OFF position.

Each power-supply voltage has an LED (D1-D7) which lights when the power supplies are active.

4.4 Reference Voltage

The TSC2046 has an internal voltage reference. An external reference may be supplied through J1 pin 20 on the TSC2046EVM, referenced to analog ground (J1 pin 18 on the TSC2046EVM). JMP1 must be installed in order to route this external reference voltage to the TSC2046.

CAUTION

Verify that the external reference voltage is within the safe operating limits shown on the TSC2046 data sheet before applying power to the EVM. Also, program the TSC2046 to use an external reference, if one is used.

5 EVM Operation

The following section provides information on the analog input, digital control, and general operating conditions of the TSC2046EVM.

5.1 Analog Input

The analog input sources (touch screen, auxiliary input, and battery input) can be applied directly to J1 (top or bottom side) or through signal-conditioning modules available for the modular EVM system.

5.2 Digital Control

The digital control signals can be applied directly to J2 (top or bottom side). The modular TSC2046EVM can also be connected directly to a DSP or microcontroller interface board, such as the HPA449, or to the USB-MODEVM Interface Board if purchased as part of the TSC2046EVM-PDK. For a current list of compatible interface and/or accessory boards for the EVM or the TSC2046, see the relevant product folder on the TI Web site.

5.3 Default Jumper Locations

Table 5 provides a list of jumpers found on the EVM and the factory default conditions for each one.

Table 5. List of Jumpers

Jumper	Shunt Position	Jumper Description
JMP1	OPEN	Connects external reference to TSC2046 (default is disconnected, using internal TSC2046 reference)
JMP2	CLOSED	Connects analog ground (AGND) to digital ground (DGND). Default is connected.
JMP3	CLOSED	EEPROM Address Select - when installed and used with the USB-MODEVM, firmware for the motherboard is executed from the EEPROM on board the TSC2046EVM. This is the default mode.
JMP4	3-4	Analog Power Select (default is +3.3VD)
JMP5	5-6	IOVDD Power Select (default is +3.3VD)

6 Kit Operation

The following section provides information on using the TSC2046EVM-PDK, including setup, program installation, and program usage.

6.1 TSC2046EVM-PDK Block Diagram

A block diagram of the TSC2046EVM-PDK is shown in Figure 1. The evaluation kit consists of two circuit boards connected together. The motherboard is designated as the USB-MODEVM Interface Board, while the daughtercard is the TSC2046EVM described previously in this manual.

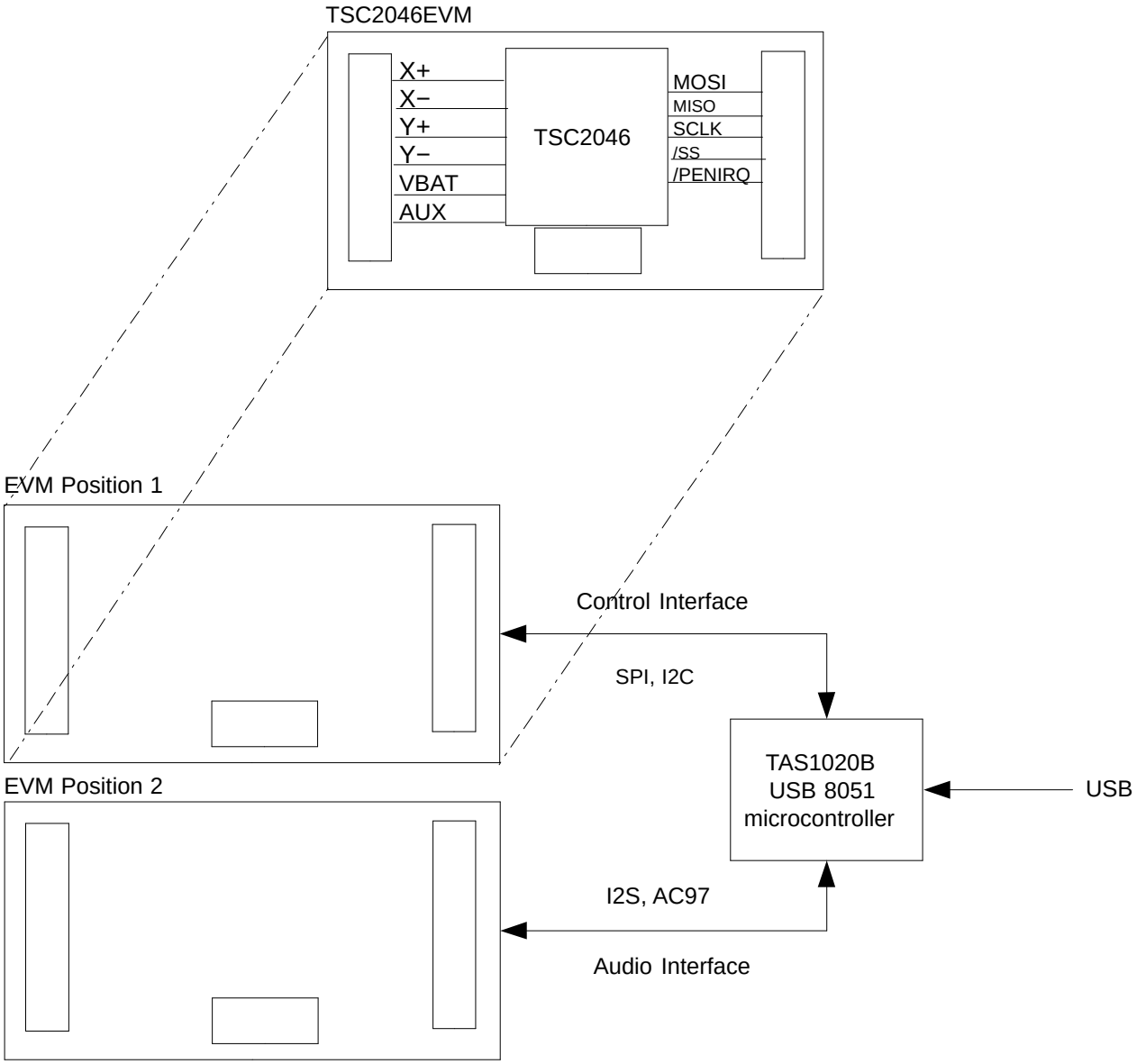

Figure 1. TSC2046EVM-PDK Block Diagram

The USB-MODEVM Interface Board is intended to be used in USB mode, where control of the installed EVM is accomplished using the onboard USB controller device. Provision is made, however, for driving all the data buses (I^2C, SPI, I^2S/AC97) externally. The source of these signals is controlled by SW2 on the USB-MODEVM.

6.2 Quick Start

Ensure that the TSC2046EVM is installed on the USB-MODEVM Interface Board. The TSC2046EVM should be installed in the topmost position, using J11, J12, and J13 on the USB-MODEVM.

Place the CD-ROM into your PC's CD-ROM drive. Locate the Setup program on the disk and execute it. The Setup program installs the TSC2046 evaluation software on your PC. Follow the instructions and prompts given.

After the main program is installed, a dialog box appears with instructions for installing NI-VISA 3.1 Runtime, a self-extracting archive. Click *OK* to proceed. A WinZip™ dialog appears. Click *Unzip*, and the archive extracts itself and automatically runs the NI-VISA 3.1 Runtime installer.

Follow the instructions in the NI-VISA 3.1 Runtime Installer. When prompted for which features to install, do the following:

1. Click on the disk icon next to NI-VISA 3.1
2. Select, ***Do not install this feature***.
3. Click on the disk icon next to *USB*.
4. Select the option which installs this feature.
5. Click *Next*.

Accept the license agreement, and continue the installation.

When the installation completes, click *Finish* on the TSC2046EVM installer window. You may be prompted to restart your computer.

When installation is complete, attach a USB cable from your PC to the USB-MODEVM Interface Board. As configured at the factory, the board will be powered from the USB interface, so the power indicator LEDs on the USB-MODEVM should light. Once this occurs, launch the TSC2046 evaluation software on your PC.

The software should automatically find the TSC2046EVM, and a screen similar to the one in Figure 2 should appear.

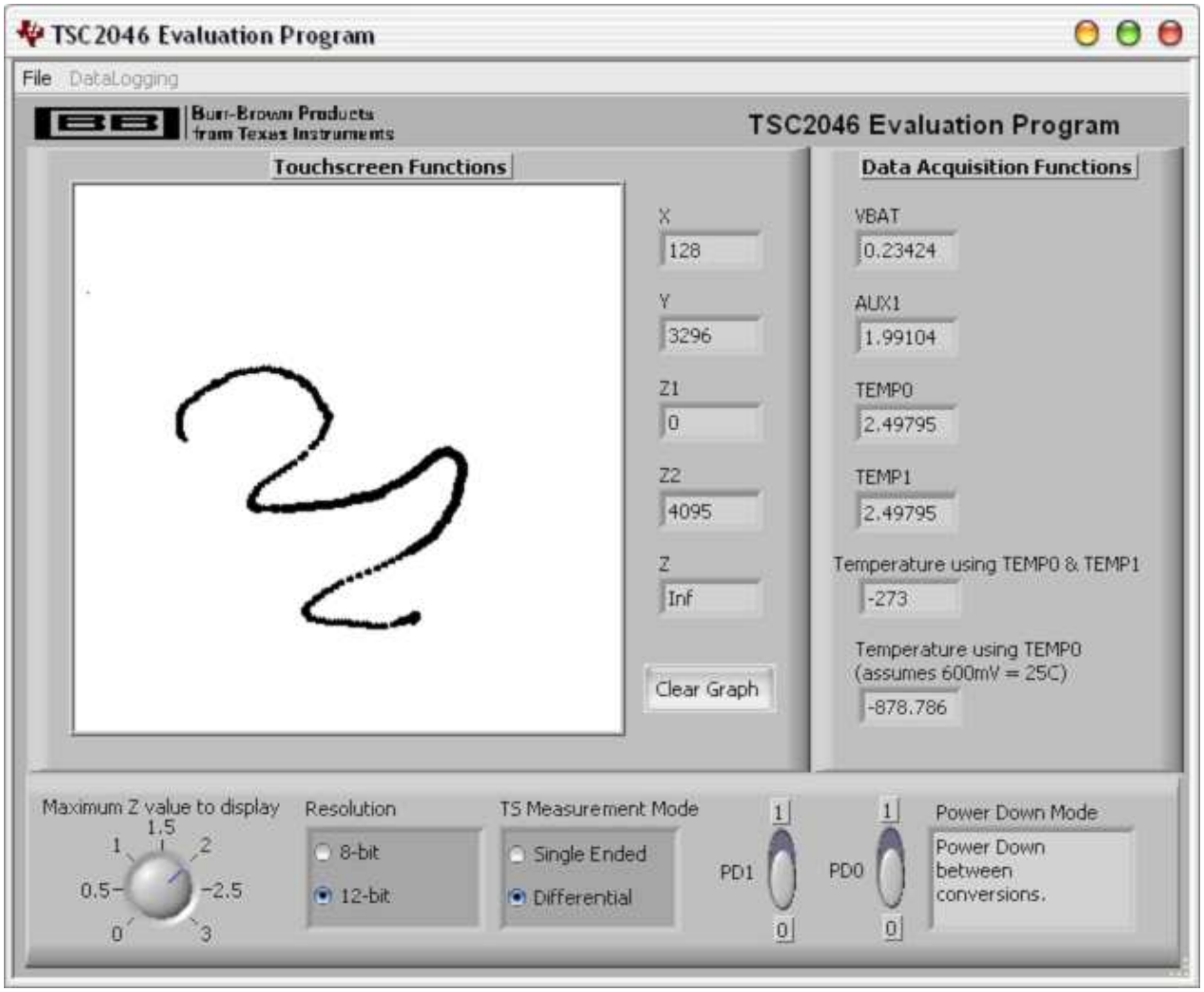

Figure 2. Default Software Screen

In order to use the touch screen features, a 4-wire, resistive touch screen needs to be connected to J1 of the TSC2046EVM, as described previously.

6.3 USB-MODEVM Interface Board

The simple diagram shown in Section 6.1 shows only the basic features of the USB-MODEVM Interface Board. The board is designed for a TAS1020B streaming audio USB controller with an 8051-based core. It features two positions for modular EVMs, or one double-wide serial modular EVM may be installed.

For use with the TSC2046, the TSC2046EVM is installed in the topmost EVM slot, which connects the TSC2046 digital control interface to the SPI port, realized using the TAS1020B. Because the TSC2046 has no audio features, the lower EVM slot (which is connected to the TAS1020B digital audio interface) is not used.

As configured from the factory, the board is ready to use with the TSC2046EVM. However, if external SPI control is desired, the signals may be applied to J15, as long as the SW2 is set so that USB SPI control is disabled. To view all the functions and configuration options available on this board, see the USB-MODEVM Interface Board schematic in Section 7.2.

6.4 Program Description

After the TSC2046EVM-PDK software installation (described in Section 6.2), evaluation and development with the TSC2046 can begin.

6.4.1 Touch Screen Functions Panel

The touch screen box in this panel is updated when a touch is detected on the touch screen. As the touch screen is drawn on, the motion on the touch screen is translated into pixels on this box. The software takes X, Y, and Z readings which are shown to the right of the touch screen box. As the touch pressure is increased, the pixel size increases; a lighter touch results in smaller pixel sizes.

The Z-value displayed is not what is described in the TSC2046 data sheet, because in the data sheet equation, it is assumed that the sheet resistance of the touch screen being used is known. The value used in this program is calculated by Equation 2 of the TSC2046 data sheet, but without multiplying it by the $R_{X\text{-plate}}$ resistance. This value ranges from 0 to 3, and larger, with smaller numbers representing a more forceful press on the screen. Using the **Maximum Z Value to Display** knob, you can set a threshold so that the program does not display lightly pressed points. This threshold setting helps to eliminate display of spurious points that may result from touch screen mechanical bouncing.

The display can be cleared by pressing the **Clear Graph** button on the screen.

6.4.2 Data Acquisition Functions Panel

The TSC2046 provides for measuring a battery voltage, an auxiliary input voltage, and temperature. A data acquisition functions panel displays the measured values for these parameters. Measurements are updated only when the touch screen is not being pressed. Note that these measurements depend on the reference voltage and are affected by the setting of the power-down bits.

Temperature is displayed using both methods described in the TSC2046 data sheet. Using the TEMP0 and TEMP1 measurements, a temperature reading with 2°C resolution and accuracy is acheived. Using only the TEMP0 measurement, a reading with 0.3°C resolution is possible, but requires knowing the TEMP0 value at 25°C. This normally is a calibration that the user performs. This program assumes that TEMP0 = 600 mV at 25°C.

6.4.3 Configuration Panel

The TSC2046 can be configured to operate in 8-bit or 12-bit resolution modes. This panel controls the mode selection.

Touch screen measurements may be made in either single-ended or differential mode; see the TSC2046 data sheet for a discussion of these modes. The touch screen measurement mode may also be selected in this panel. If single-ended mode is used, an external reference is highly recommended; however, single-ended measurements are discouraged for touch screen use, because differential mode yields far more accurate results.

The two power-down bits of the TSC2046 can also be set from this panel. A brief description of the mode selected is shown on the screen when setting these bits; see Table V of the TSC2046 data sheet for details on the functions of these bits.

6.4.4 Datalogging

The software can record the data it is taking from the TSC2046 to a tab-delimited file, suitable for importing into spreadsheets. To do this, first go into the *File* menu, and select *Log Data to File...*, which opens a file-select window and allows you to specify a file to which to write the data. At the same time, this enables the Datalogging menu.

When ready to begin recording data to a file, select *Datalogging* → *Start Logging*. Data is written to the file until *Datalogging* → *Stop Logging* is selected. When the screen is not touched, the VBAT, AUX, and TEMP values are written to the file, and the X, Y, Z1, and Z2 parameters are written to the file with values of 9999, to indicate that they are not updated. When the screen is touched, the X, Y, Z1, and Z2 parameters are written while the VBAT, AUX, and TEMP values are written to the file as 9999. Because the program constantly updates at a rate of about 400 readings per second, datalog files can quickly grow large; therefore, log only what is necessary.

The format of the data file has the first column as the time in milliseconds (just a timer in the program, which can arbitrarily start at any number), then X, Y, Z1, Z2, VBAT, AUX1, TEMP0, and TEMP1 columns. Every new reading is a new row in the file.

7 EVM Bill of Materials and Schematic

The following tables contain a complete bill of materials for the modular TSC2046EVM and the USB-MODEVM Interface Board (included only in the TSC2046EVM-PDK).

Table 6. TSC2046EVM Bill of Materials

Designators	Description	Manufacturer	Mfg. Part Number
R1, R2, R3, R4	0Ω 1/8W 5% Chip Resistor	Panasonic	ERJ-6GEY0R00V
R7, R8	33Ω 1/8W 5% Chip Resistor	Panasonic	ERJ-6GEYJ330V
R5, R6	100Ω 1/8W 5% Chip Resistor	Panasonic	ERJ-6GEYJ101V
R9, R10, R11	2.7KΩ 1/8W 5% Chip Resistor	Panasonic	ERJ-6GEYJ272V
C10	1µF 25V Ceramic Chip Capacitor, ±10%, X5R	TDK	C2012X5R1E105K
C7, C8, C9	10µF 25V Ceramic Chip Capacitor, ±20%, X5R	TDK	C3216X5R1C106M
C1, C2, C3, C4, C5, C6	Ceramic Chip Capacitor - Not Installed		
L1	100µH Surface Mount Inductor, Shielded	API Delevan	S1210-104K
U1	Touch Screen Controller	Texas Instruments	TSC2046IRGVR
U2	64K I^2C EEPROM	MicroChip	24LC64-I/SN
	TSC2046EVM PCB	Texas Instruments	6463990
J1A, J2A	20-pin SMT Plug	Samtec	TSM-110-01-L-DV-P
J1B, J2B	20-pin SMT Socket	Samtec	SSW-110-22-F-D-VS-K
J3A	10-pin SMT Plug	Samtec	TSM-105-01-L-DV-P
J3B	10-pin SMT Socket	Samtec	SSW-105-22-F-D-VS-K
JMP1, JMP2, JMP3	2 Position Jumper, 0.1" spacing	Samtec	TSW-102-07-L-S
JMP4	2 X 2 Position Header, 0.1" spacing	Samtec	TSW-102-07-L-D
JMP5	4 X 2 Position Header, 0.1" spacing	Samtec	TSW-104-07-L-D
TP1, TP3	Miniature Test Point Terminal	Keystone Electronics	5000
TP2, TP4	Multipurpose Test Point Terminal	Keystone Electronics	5011
	Header Shorting Block	Samtec	SNT-100-BK-T

Table 7. USB-MODEVM Bill of Materials

Designators	Description	Manufacturer	Mfg. Part Number
R4	10Ω 1/10W 5% Chip Resistor	Panasonic	ERJ-3GEYJ100V
R10, R11	27.4Ω 1/16W 1% Chip Resistor	Panasonic	ERJ-3EKF27R4V
R20	75Ω 1/4W 1% Chip Resistor	Panasonic	ERJ-14NF75R0U
R19	220Ω 1/10W 5% Chip Resistor	Panasonic	ERJ-3GEYJ221V
R14, R21, R22	390Ω 1/10W 5% Chip Resistor	Panasonic	ERJ-3GEYJ391V
R13	649Ω 1/16W 1% Chip Resistor	Panasonic	ERJ-3EKF6490V
R9	1.5KΩ 1/10W 5% Chip Resistor	Panasonic	ERJ-3GEYJ152V
R1, R2, R3, R5, R6, R7, R8	2.7KΩ 1/10W 5% Chip Resistor	Panasonic	ERJ-3GEYJ272V
R12	3.09KΩ 1/16W 1% Chip Resistor	Panasonic	ERJ-3EKF3091V
R15, R16	10KΩ 1/10W 5% Chip Resistor	Panasonic	ERJ-3GEYJ103V
R17, R18	100KΩ 1/10W 5% Chip Resistor	Panasonic	ERJ-3GEYJ104V
RA1	10KΩ 1/8W Octal Isolated Resistor Array	CTS Corporation	742C163103JTR
C18, C19	33pF 50V Ceramic Chip Capacitor, ±5%, NPO	TDK	C1608C0G1H330J
C13, C14	47pF 50V Ceramic Chip Capacitor, ±5%, NPO	TDK	C1608C0G1H470J
C20	100pF 50V Ceramic Chip Capacitor, ±5%, NPO	TDK	C1608C0G1H101J
C21	1000pF 50V Ceramic Chip Capacitor, ±5%, NPO	TDK	C1608C0G1H102J
C15	0.1µF 16V Ceramic Chip Capacitor, ±10%,X7R	TDK	C1608X7R1C104K
C16, C17	0.33µF 16V Ceramic Chip Capacitor, +/-20%,Y5V	TDK	C1608X5R1C334K
C9, C10, C11, C12, C22, C23, C24, C25, C26, C27, C28	1µF 6.3V Ceramic Chip Capacitor, ±10%, X5R	TDK	C1608X5R0J105K
C1, C2, C3, C4, C5, C6, C7, C8	10µF 6.3V Ceramic Chip Capacitor, ±10%, X5R	TDK	C3216X5R0J106K
D1	50V, 1A, Diode MELF SMD	Micro Commercial Components	DL4001
D2	Yellow Light Emitting Diode	Lumex	SML-LX0603YW-TR
D3, D4, D6, D7	Green Light Emitting Diode	Lumex	SML-LX0603GW-TR
D5	Red Light Emitting Diode	Lumex	SML-LX0603IW-TR
Q1, Q2	N-Channel MOSFET	Zetex	ZXMN6A07F
X1	6MHz Crystal SMD	Epson	MA-505 6.000M-C0
U8	USB Streaming Controller	Texas Instruments	TAS1020BPFB
U2	5V LDO Regulator	Texas Instruments	REG1117-5
U9	3.3V/1.8V Dual Output LDO Regulator	Texas Instruments	TPS767D318PWP
U3, U4	Quad, Tri-State Buffers	Texas Instruments	SN74LVC125APW
U5, U6, U7	Single IC Buffer Driver with Open Drain o/p	Texas Instruments	SN74LVC1G07DBVR
U10	Single Tri-State Buffer	Texas Instruments	SN74LVC1G125DBVR
U1	64K 2-Wire Serial EEPROM I^2C	Microchip	24LC64I/SN
	USB-MODEVM PWB	Texas Instruments	6463995

Table 7. USB-MODEVM Bill of Materials (continued)

Designators	Description	Manufacturer	Mfg. Part Number
TP1, TP2, TP3, TP4, TP5, TP6, TP9, TP10, TP11	Miniature Test Point Terminal	Keystone Electronics	5000
TP7, TP8	Multipurpose Test Point Terminal	Keystone Electronics	5011
J7	USB Type B Slave Connector Thru-Hole	Mill-Max	897-30-004-90-000000
J1, J2, J3, J4, J5, J8	2 Position Terminal Block	On Shore Technology	ED555/2DS
J9	2.5mm Power Connector	CUI Stack	PJ-102B
J10	BNC Connector, Female, PC Mount	AMP/Tyco	414305-1
J11A, J12A, J21A, J22A	20-pin SMT Plug	Samtec	TSM-110-01-L-DV-P
J11B, J12B, J21B, J22B	20-pin SMT Socket	Samtec	SSW-110-22-F-D-VS-K
J13A, J23A	10-pin SMT Plug	Samtec	TSM-105-01-L-DV-P
J13B, J23B	10-pin SMT Socket	Samtec	SSW-105-22-F-D-VS-K
J6	4-Pin Double Row Header (2x2) 0.1"	Samtec	TSW-102-07-L-D
J14, J15	12-Pin Double Row Header (2x6) 0.1"	Samtec	TSW-106-07-L-D
JMP1-JMP4	2 Position Jumper, 0.1" spacing	Samtec	TSW-102-07-L-S
JMP8-JMP14	2 Position Jumper, 0.1" spacing	Samtec	TSW-102-07-L-S
JMP5, JMP6	3 Position Jumper, 0.1" spacing	Samtec	TSW-103-07-L-S
JMP7	3 Position Dual Row Jumper, 0.1" spacing	Samtec	TSW-103-07-L-D
SW1	SMT, Half-Pitch 2 Position Switch	C&K Division, ITT	TDA02H0SK1
SW2	SMT, Half-Pitch 8 Position Switch	C&K Division, ITT	TDA08H0SK1
	Jumper Plug	Samtec	SNT-100-BK-T

7.1 TSC2046EVM Schematic

The schematic diagram is provided as a reference.

7.2 USB-MODEVM Schematic

The schematic diagram is provided as a reference.

REVISION HISTORY		
REV	ENGINEERING CHANGE NUMBER	APPROVED

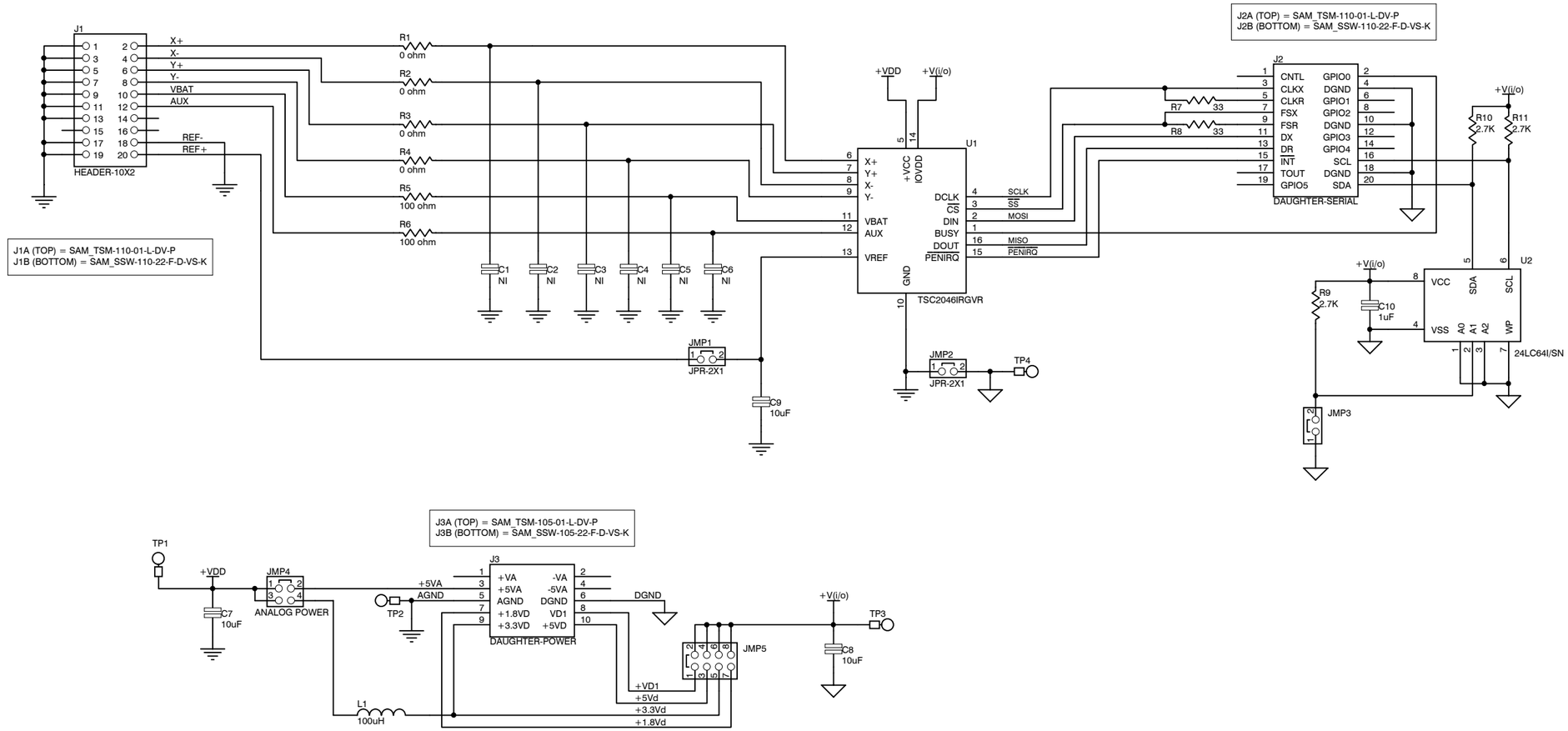

TEXAS INSTRUMENTS			
DATA ACQUISITION PRODUCTS HIGH-PERFORMANCE ANALOG DIVISION SEMICONDUCTOR GROUP			
6730 SOUTH TUCSON BLVD., TUCSON, AZ 85706 USA			
ENGINEER **RICK DOWNS**	TITLE **TSC2046 Evaluation Module**		
DRAWN BY **ROBERT BENJAMIN**			
DOCUMENT CONTROL NO. **6463991**	SIZE **B**	DATE **13-Sep-2004**	REV **A**
SHEET **1** OF **1**	FILE **D:\TSC2046EVM\TSC2046EVM.ddb - SCH\TSC2046EVM**		

REVISION HISTORY		
REV	ENGINEERING CHANGE NUMBER	APPROVED

IOVDD
Q1 ZXMN6A07F
SDA
J6
EXTERNAL I2C
Q2 ZXMN6A07F
SCL
TP10
TP9
+3.3VD
R3 2.7K
R5 2.7K
+3.3VD
U1
VCC SDA SCL
VSS A0 A1 A2 WP
C9 1uF
24LC64I/SN
C18 33pF
X1
MA-505 6.000M-C0
6.00 MHZ
C19 33pF
J7 USB SLAVE CONN
GND D+ D- VCC
897-30-004-90-000000
R9 1.5K
R10 27.4
R11 27.4
C20 100pF
C21 .001uF
R12 3.09K
C13 47pF
C14 47pF
U8
TAS1020BPFB
SCL SDA VREN RESET MCLKO2 MCLKO1 CSCLK CDATO CDATI CSYNC CRESET CSCHNE
XTALO XTALI PLLFILI PLLFILO MCLKI PUR DP DM DVSS DVSS DVSS AVSS
P1.7 P1.6 P1.5 P1.4 P1.3 P1.2 P1.1 P1.0 DVDD DVDD DVDD AVDD
MRESET TEST EXTEN RSTO P3.0 P3.1 P3.2/XINT P3.3 P3.4 P3.5 NC NC
TP11 MRESET
+3.3VD
R13 649
USB ACTIVE
D2 SML-LX0603YW-TR
YELLOW
C24 1uF
C10 1uF
C11 1uF
C12 1uF
+3.3VD
JMP8 P1.3
JMP9 P1.2
JMP10 P1.1
JMP11 P1.0
JMP12 P3.5
JMP13 P3.4
JMP14 P3.3
U3
SN74LVC125APW
USB MCK
USB I2S
1A 2A 3A 4A 1OE 2OE 3OE 4OE VCC 1Y 2Y 3Y 4Y GND
C22 1uF
IOVDD
C28 1uF
U10
SN74LVC1G125DBV
J10 EXT MCLK
R20 75
MCLK
I2SDIN
BCLK
LRCLK
I2SDOUT
+3.3VD
RA1 10K
SW2
A0 A1 A2 USB I2S USB MCK USB SPI USB RST EXT MCK
SW DIP-8
R6 2.7K
U5
SN74LVC1G07DBV
C23 1uF
IOVDD
J14
EXTERNAL AUDIO DATA
+3.3VD
R7 2.7K
C26 1uF
IOVDD
U7
SN74LVC1G07DBV
PWR_DWN
MISO
MOSI
SS
SCLK
RESET
C27 1uF
IOVDD
U4
SN74LVC125APW
1A 2A 3A 4A 1OE 2OE 3OE 4OE VCC 1Y 2Y 3Y 4Y GND
J15
EXTERNAL SPI
USB RST
USB SPI
INT
+3.3VD
R8 2.7K
C25 1uF
IOVDD
U6
SN74LVC1G07DBV
J8
ED555/2DS
EXT PWR IN
6VDC-10VDC IN
JMP6
PWR SELECT
+5VD
R14 390
D3 SML-LX0603GW-TR
GREEN
U9
TPS767D318PWP
1IN 1IN 1EN 1GND 2GND 2EN 2IN 2IN 1RESET 1OUT 1OUT 2RESET 2OUT 2OUT
R17 100K
C7 10uF
+1.8VD
R18 100K
+3.3VD
R19 220
C8 10uF
D4 SML-LX0603GW-TR
GREEN
R4 10
D5 SML-LX0603IW-TR
RED
C17 0.33uF
R15 10K
R16 10K
SW1
1.8VD ENABLE
3.3VD ENABLE
REGULATOR ENABLE
J9
CUI-STACK PJ102-B
2.5 MM
D1 DL4001
U2
REG1117-5
VIN GND VOUT
C15 0.1uF
C16 0.33uF
C6 10uF
+5VD
+3.3VD
+1.8VD
IOVDD
JMP7
IOVDD SELECT
TP6

ENGINEER **RICK DOWNS**	TITLE **USB-MODEVM INTERFACE**		
DRAWN BY **ROBERT BENJAMIN**			
DOCUMENT CONTROL NO. **6463996**	SIZE **B**	DATE **10-Jun-2004**	REV **A**
SHEET **1** OF **2**	FILE **G:\USB Motherboard - Modular Evm\Schematic\USB Motherboard - ModEvm.ddb - Docume**		

TEXAS INSTRUMENTS
DATA ACQUISITION PRODUCTS
HIGH PERFORMANCE ANALOG DIVISION
SEMICONDUCTOR GROUP
6730 SOUTH TUCSON BLVD., TUCSON, AZ 85706 USA

REVISION HISTORY		
REV	ENGINEERING CHANGE NUMBER	APPROVED

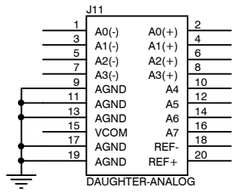

J11A (TOP) = SAM_TSM-110-01-L-DV-P
J11B (BOTTOM) = SAM_SSW-110-22-F-D-VS-K

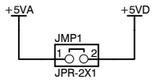

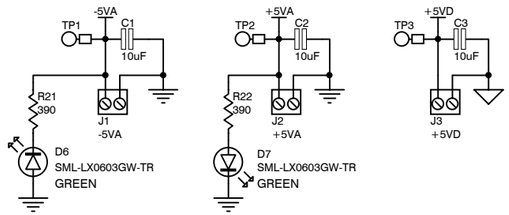

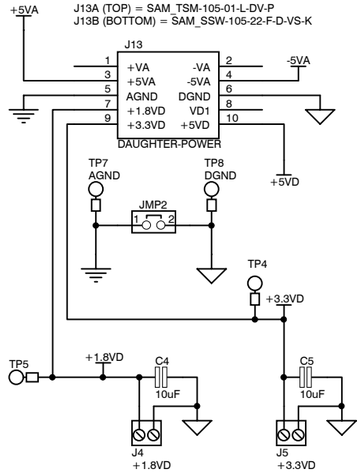

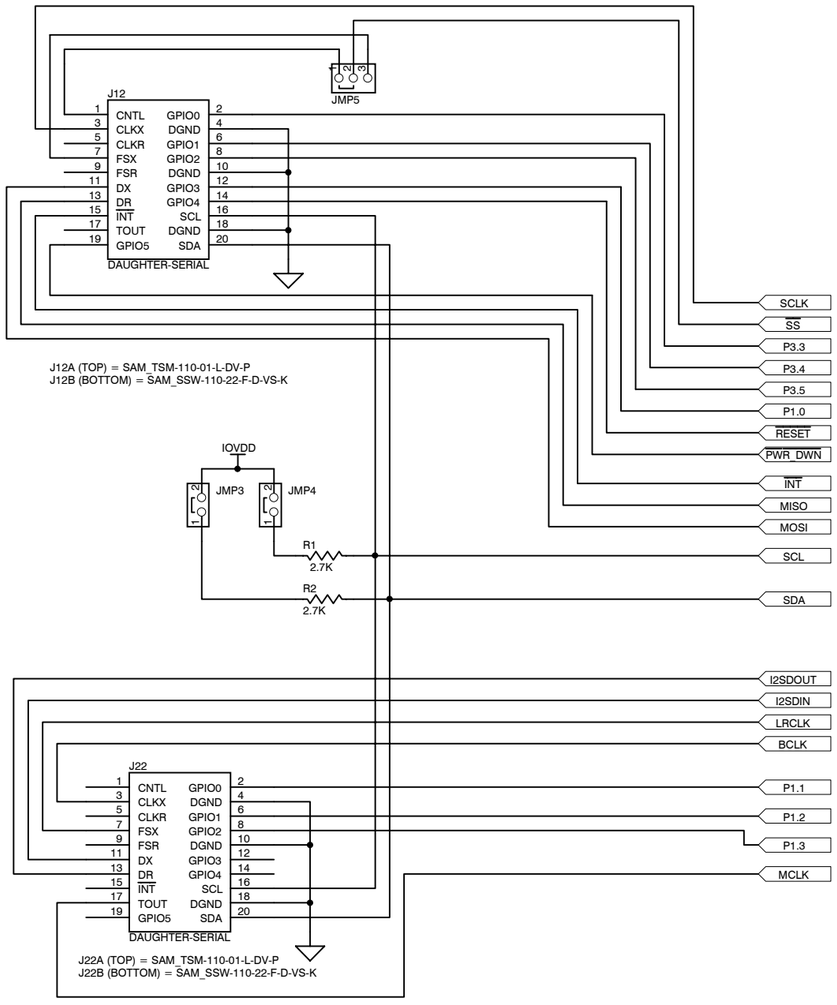

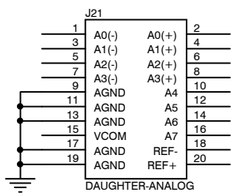

J21A (TOP) = SAM_TSM-110-01-L-DV-P
J21B (BOTTOM) = SAM_SSW-110-22-F-D-VS-K

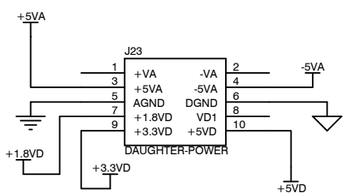

J23A (TOP) = SAM_TSM-105-01-L-DV-P
J23B (BOTTOM) = SAM_SSW-105-22-F-D-VS-K

TEXAS INSTRUMENTS

DATA ACQUISITION PRODUCTS
HIGH-PERFORMANCE ANALOG DIVISION
SEMICONDUCTOR GROUP

6730 SOUTH TUCSON BLVD., TUCSON, AZ 85706 USA

TITLE **USB-MODEVM INTERFACE**

ENGINEER **RICK DOWNS**			
DRAWN BY **ROBERT BENJAMIN**			
DOCUMENT CONTROL NO. **6463996**	SIZE **B**	DATE **10-Jun-2004**	REV **A**
SHEET **2** OF **2**	FILE **G:\USB Motherboard - Modular Evm\Schematic\USB Motherboard - ModEvm.ddb - Docume**		

FCC Warnings

This equipment is intended for use in a laboratory test environment only. It generates, uses, and can radiate radio frequency energy and has not been tested for compliance with the limits of computing devices pursuant to subpart J of part 15 of FCC rules, which are designed to provide reasonable protection against radio frequency interference. Operation of this equipment in other environments may cause interference with radio communications, in which case the user at his own expense will be required to take whatever measures may be required to correct this interference.

EVM IMPORTANT NOTICE

Texas Instruments (TI) provides the enclosed product(s) under the following conditions:

This evaluation kit being sold by TI is intended for use for **ENGINEERING DEVELOPMENT OR EVALUATION PURPOSES ONLY** and is not considered by TI to be fit for commercial use. As such, the goods being provided may not be complete in terms of required design-, marketing-, and/or manufacturing-related protective considerations, including product safety measures typically found in the end product incorporating the goods. As a prototype, this product does not fall within the scope of the European Union directive on electromagnetic compatibility and therefore may not meet the technical requirements of the directive.

Should this evaluation kit not meet the specifications indicated in the EVM User's Guide, the kit may be returned within 30 days from the date of delivery for a full refund. THE FOREGOING WARRANTY IS THE EXCLUSIVE WARRANTY MADE BY SELLER TO BUYER AND IS IN LIEU OF ALL OTHER WARRANTIES, EXPRESSED, IMPLIED, OR STATUTORY, INCLUDING ANY WARRANTY OF MERCHANTABILITY OR FITNESS FOR ANY PARTICULAR PURPOSE.

The user assumes all responsibility and liability for proper and safe handling of the goods. Further, the user indemnifies TI from all claims arising from the handling or use of the goods. Please be aware that the products received may not be regulatory compliant or agency certified (FCC, UL, CE, etc.). Due to the open construction of the product, it is the user's responsibility to take any and all appropriate precautions with regard to electrostatic discharge.

EXCEPT TO THE EXTENT OF THE INDEMNITY SET FORTH ABOVE, NEITHER PARTY SHALL BE Liable to the other FOR ANY INDIRECT, SPECIAL, INCIDENTAL, OR CONSEQUENTIAL DAMAGES.

TI currently deals with a variety of customers for products, and therefore our arrangement with the user **is not exclusive**.

TI assumes **no liability for applications assistance, customer product design, software performance, or infringement of patents or services described herein.**

Please read the EVM User's Guide and, specifically, the EVM Warnings and Restrictions notice in the EVM User's Guide prior to handling the product. This notice contains important safety information about temperatures and voltages. For further safety concerns, please contact the TI application engineer.

Persons handling the product must have electronics training and observe good laboratory practice standards.

No license is granted under any patent right or other intellectual property right of TI covering or relating to any machine, process, or combination in which such TI products or services might be or are used.

EVM WARNINGS AND RESTRICTIONS

It is important to operate this EVM within the input voltage range of 1.8 V to 5 V and the output voltage range of 0 V to 5 V.

Exceeding the specified input range may cause unexpected operation and/or irreversible damage to the EVM. If there are questions concerning the input range, please contact a TI field representative prior to connecting the input power.

Applying loads outside of the specified output range may result in unintended operation and/or possible permanent damage to the EVM. Please consult the EVM User's Guide prior to connecting any load to the EVM output. If there is uncertainty as to the load specification, please contact a TI field representative.

During normal operation, some circuit components may have case temperatures greater than 30 °C. The EVM is designed to operate properly with certain components above 85 °C as long as the input and output ranges are maintained. These components include but are not limited to linear regulators, switching transistors, pass transistors, and current sense resistors. These types of devices can be identified using the EVM schematic located in the EVM User's Guide. When placing measurement probes near these devices during operation, please be aware that these devices may be very warm to the touch.

Mailing Address: Texas Instruments, Post Office Box 655303, Dallas, Texas 75265
Copyright © 2004, Texas Instruments Incorporated

IMPORTANT NOTICE

Texas Instruments Incorporated and its subsidiaries (TI) reserve the right to make corrections, modifications, enhancements, improvements, and other changes to its products and services at any time and to discontinue any product or service without notice. Customers should obtain the latest relevant information before placing orders and should verify that such information is current and complete. All products are sold subject to TI's terms and conditions of sale supplied at the time of order acknowledgment.

TI warrants performance of its hardware products to the specifications applicable at the time of sale in accordance with TI's standard warranty. Testing and other quality control techniques are used to the extent TI deems necessary to support this warranty. Except where mandated by government requirements, testing of all parameters of each product is not necessarily performed.

TI assumes no liability for applications assistance or customer product design. Customers are responsible for their products and applications using TI components. To minimize the risks associated with customer products and applications, customers should provide adequate design and operating safeguards.

TI does not warrant or represent that any license, either express or implied, is granted under any TI patent right, copyright, mask work right, or other TI intellectual property right relating to any combination, machine, or process in which TI products or services are used. Information published by TI regarding third-party products or services does not constitute a license from TI to use such products or services or a warranty or endorsement thereof. Use of such information may require a license from a third party under the patents or other intellectual property of the third party, or a license from TI under the patents or other intellectual property of TI.

Reproduction of information in TI data books or data sheets is permissible only if reproduction is without alteration and is accompanied by all associated warranties, conditions, limitations, and notices. Reproduction of this information with alteration is an unfair and deceptive business practice. TI is not responsible or liable for such altered documentation.

Resale of TI products or services with statements different from or beyond the parameters stated by TI for that product or service voids all express and any implied warranties for the associated TI product or service and is an unfair and deceptive business practice. TI is not responsible or liable for any such statements.

TI products are not authorized for use in safety-critical applications (such as life support) where a failure of the TI product would reasonably be expected to cause severe personal injury or death, unless officers of the parties have executed an agreement specifically governing such use. Buyers represent that they have all necessary expertise in the safety and regulatory ramifications of their applications, and acknowledge and agree that they are solely responsible for all legal, regulatory and safety-related requirements concerning their products and any use of TI products in such safety-critical applications, notwithstanding any applications-related information or support that may be provided by TI. Further, Buyers must fully indemnify TI and its representatives against any damages arising out of the use of TI products in such safety-critical applications.

TI products are neither designed nor intended for use in military/aerospace applications or environments unless the TI products are specifically designated by TI as military-grade or "enhanced plastic." Only products designated by TI as military-grade meet military specifications. Buyers acknowledge and agree that any such use of TI products which TI has not designated as military-grade is solely at the Buyer's risk, and that they are solely responsible for compliance with all legal and regulatory requirements in connection with such use.

TI products are neither designed nor intended for use in automotive applications or environments unless the specific TI products are designated by TI as compliant with ISO/TS 16949 requirements. Buyers acknowledge and agree that, if they use any non-designated products in automotive applications, TI will not be responsible for any failure to meet such requirements.

Following are URLs where you can obtain information on other Texas Instruments products and application solutions:

Products		**Applications**	
Amplifiers	amplifier.ti.com	Audio	www.ti.com/audio
Data Converters	dataconverter.ti.com	Automotive	www.ti.com/automotive
DSP	dsp.ti.com	Broadband	www.ti.com/broadband
Interface	interface.ti.com	Digital Control	www.ti.com/digitalcontrol
Logic	logic.ti.com	Military	www.ti.com/military
Power Mgmt	power.ti.com	Optical Networking	www.ti.com/opticalnetwork
Microcontrollers	microcontroller.ti.com	Security	www.ti.com/security
RFID	www.ti-rfid.com	Telephony	www.ti.com/telephony
Low Power Wireless	www.ti.com/lpw	Video & Imaging	www.ti.com/video
		Wireless	www.ti.com/wireless

Mailing Address: Texas Instruments, Post Office Box 655303, Dallas, Texas 75265
Copyright © 2007, Texas Instruments Incorporated